TXT RACING 125 - 250 - 280 - 300 cc

DESPIECE / PART LIST

2017 E4

GASGAS

ABRIL/ APRIL/ AVRIL/ ABRIL

Revisión 01 05/2017

INDICE/ INDEX

TXT RACING 2017 E4

CHASIS / FRAME

MANILLAR
HANDLEBAR

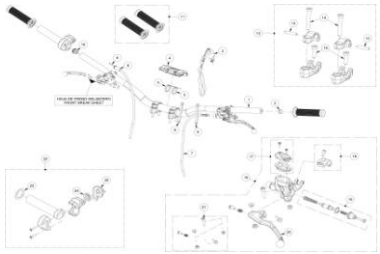

1

SUSPENSION
SUSPENSION

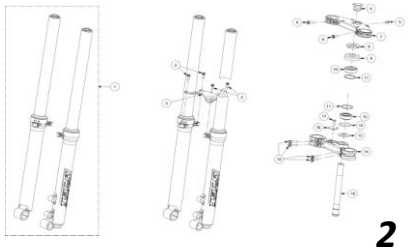

2

CHASIS
FRAME

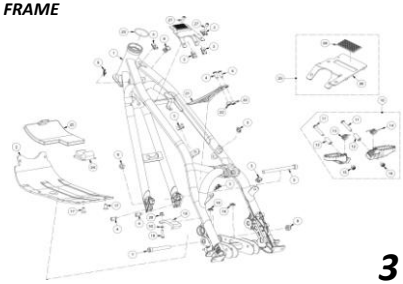

3

BASCULANTE
SWINGARM

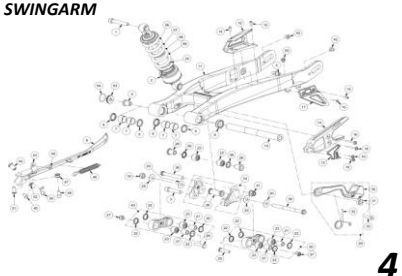

4

PLASTICOS
PLASTICS

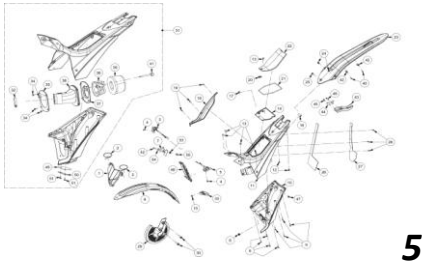

5

ADHESIVOS
DECALS

6

DEPOSITO
FUEL TANK

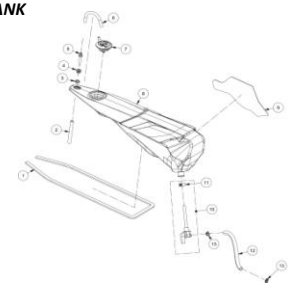

7

RADIADOR
RADIATOR

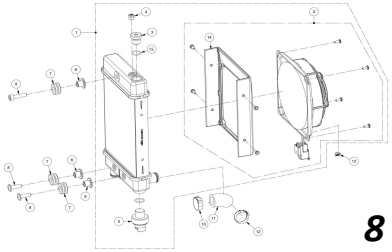

8

ELECTRICO
ELECTRIC INSTALLATION

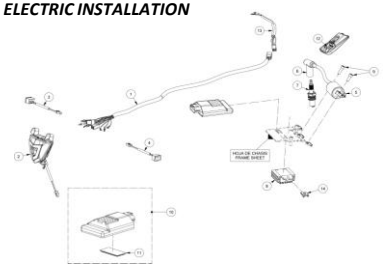

9

TUBO DE ESCAPE
EXHAUST

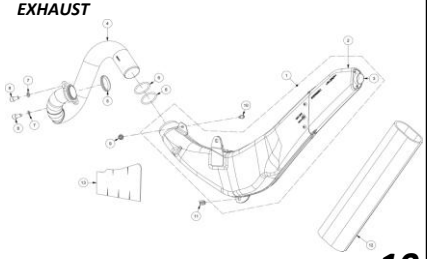

10

RUEDA DELANTERA
FRONT WHEEL

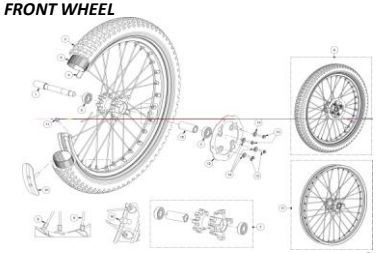

11

INDICE/ INDEX

TXT RACING2017 E4

RUEDA TRASERA
REAR WHEEL

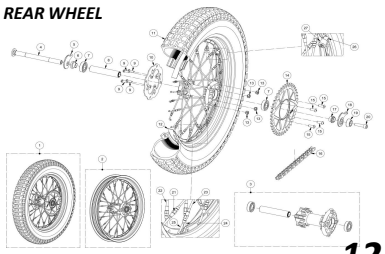

12

FRENO DELANTERO
FRONT BRAKE

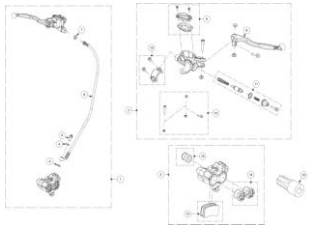

13

FRENO TRASERO
REAR BRAKE

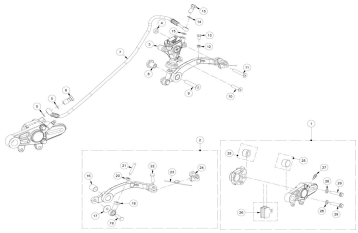

14

MOTOR / ENGINE

PEDAL DE ARRANQUE
KICKSTART

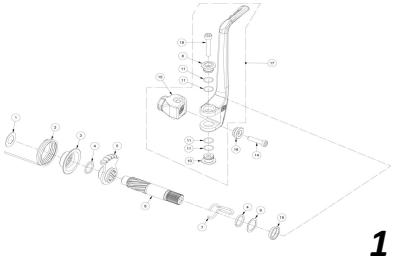

1

SELECTOR DE CAMBIO
SHIFT CAM

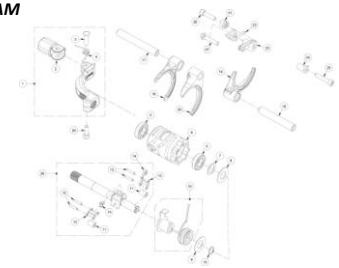

2

CARTER
CRANKCASE

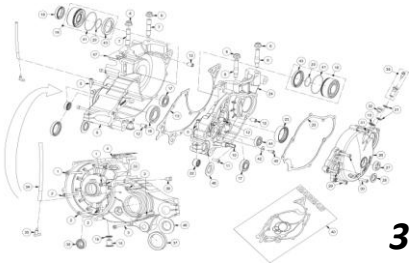

3

CARTER
CRANKCASE

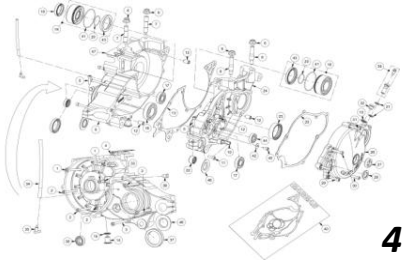

4

BOMBA DE AGUA
WATER PUMP

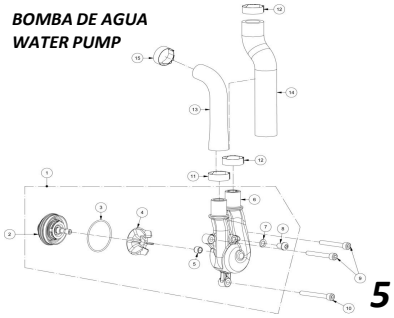

5

ENCENDIDO
IGNITION

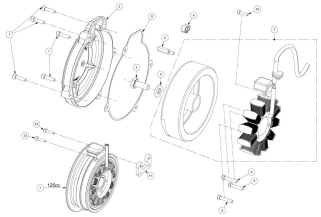

6

CIGUEÑAL
CRANKSHAFT

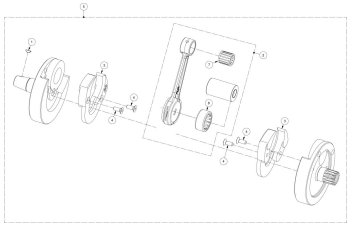

7

EMBRAGUE
CLUTCH

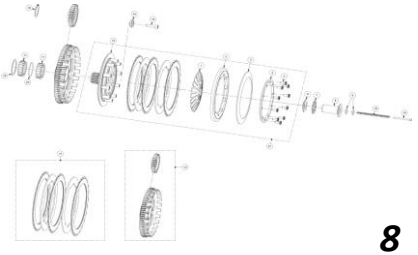

8

CILINDRO
CYLINDER

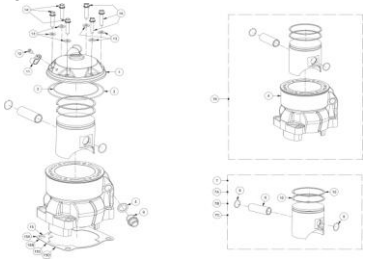

9

ENGRANAJES CAMBIO
GEAR SET

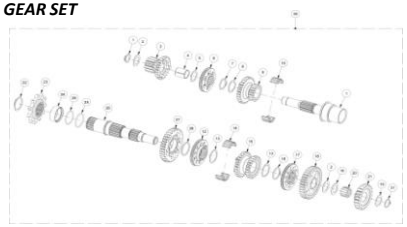

10

CAJA DE LAMINAS
REED VALVE

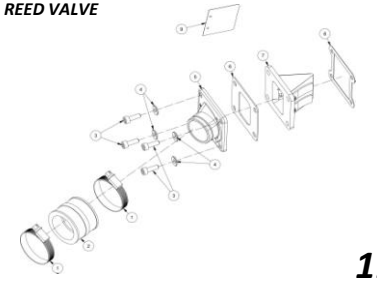

11

CARBURADOR
CARBURETOR

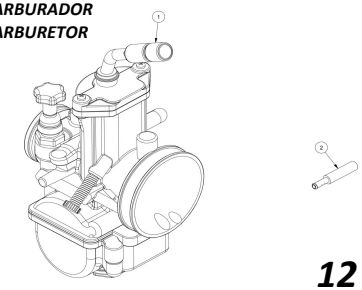

12

KIT HOMOLOGACION
HOMOLOGATION KIT

CHASIS
FRAME

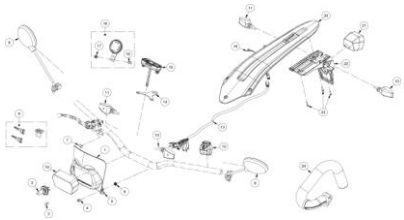

3

TREN TRASERO
REAR BIKE

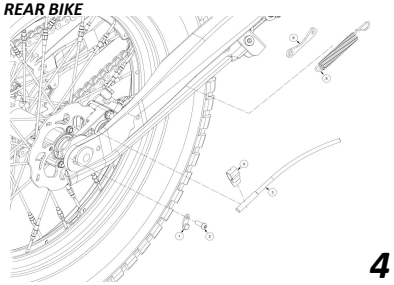

4

La empresa tiene derecho, sin previo aviso, de cambiar el contenido técnico de los productos. The Company reserves the right to modify technical specifications without prior notice.

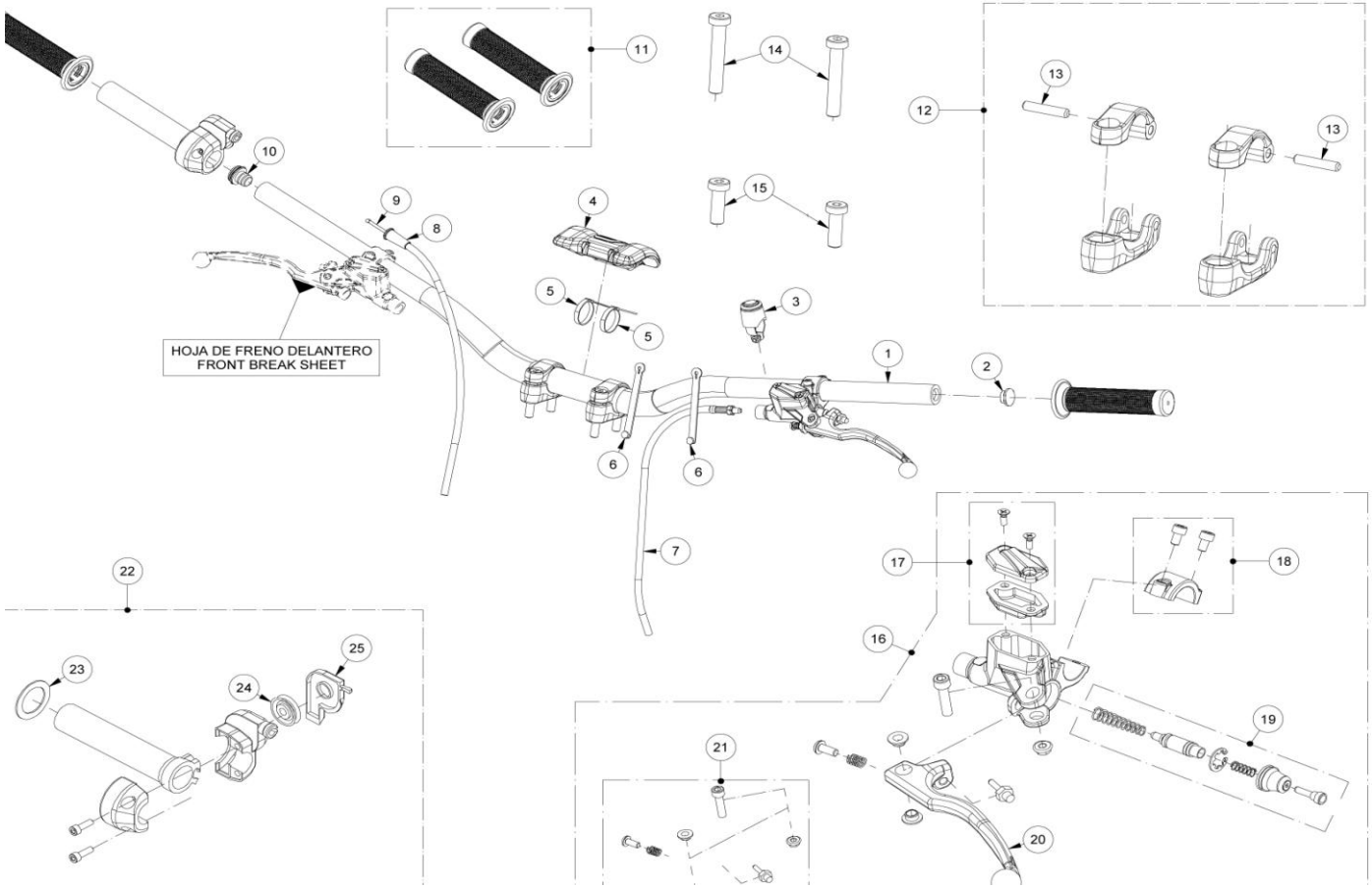
HOJA DE FRENO DELANTERO
FRONT BREAK SHEET
1
2
3
4
5
5
6
6
7
8
9
10
11
12
13
13
14
15
16
17
18
19
20
21
22
23
24
25

Nº	DESCRIPCION	DESCRIPTION				125 / 250 / 280 / 300	Cant.
1	MANILLAR	HANDLEBAR				BT25000GG-CGR-1	1
2	TAPON MANILLAR MOSS (12089)	HANDLEBAR CAP(12089)				BT255953012	1
3	DISPOSITIVO SEGURIDAD PILOTO	STOP BUTTON				ET85500GG-CBN-1	1
4	PROTECTOR MANILLAR	HANDLEBAR PROTECTOR				BT25020GG-CBN-1	1
5	BRIDA UNEX 3,6x200 FIJA PROTECTOR MANILLAR	UNEX 3,6X200 CLAMP				BE25634012	2
6	GOMA SUJECIÓN CABLEADOS	WIRE SUBJET RUBBER				BFS450320067	2
7	LATIGUILLO EMBRAGUE TRIAL DIAM.GRANDE	CLUTCH HOSE				BT47000GG-CKA-1	1
8	GUARDAPOLVO PUÑO GAS	THROTTLE CABLE DUST COVER				G600000	1
9	CABLE DE GAS	THROTTLE CABLE				E160003	1
10	RODAMIENTO + CASQUILLO MANDO DE GAS	BEARING + HANDLEBAR THROTTLE				BT26010R3010	1
11	JUEGO EMPUÑADURAS TRIAL	HANDLEBAR GRIP (PAIR)				BT26100GG-CBN-1	1
12	KIT BRIDAS MANILLAR	HANDLEBAR RAISERS KIT				BT280414012C	1
13	PASADOR CILÍNDRICO	DOWEL PIN				BT280414010	2
14	TORNILLO UFK 8X50	8X50 UFK SCREW				T0318050	2
15	TORNILLO UFK 8X25	8X25 UFK SCREW				T0318025	2
16	CTO. BOMBA ENBRAGUE RACING	CLUTCH PUMP				BT46000CT-CJD-1	1
17	KIT TAPA BOMBA EMBRAGUE	COVER PUMP SET				BT46200CT-CJD-1	1
18	SOPORTE BOMBA FRENO Y EMBRAGUE	MASTER CYLINDER CLAMP				BT61350GG-CJD-1	1
19	KIT REPARACION BOMBA EMBRAGUE	CLUTCH PUMP REPAIR SET				BT46010CT-CJD-1	1
20	MANETA EMBRAGUE	CLUTCH LEVER R				BT463003013	1
21	KIT AJUSTE	ADJUST KIT				BT614003013	1
22	PUÑO MANDO GAS	TWIST GRIP				E100001	1
23	ARANDELA MANDO GAS	TWIST GRIP WASHER				BT27922078	1
24	RODILLO MANDO GAS	TWIST GRIP ROLLER				E119000	1
25	TAPA MANDO GAS	TWIST GRIP COVER				E140000	1

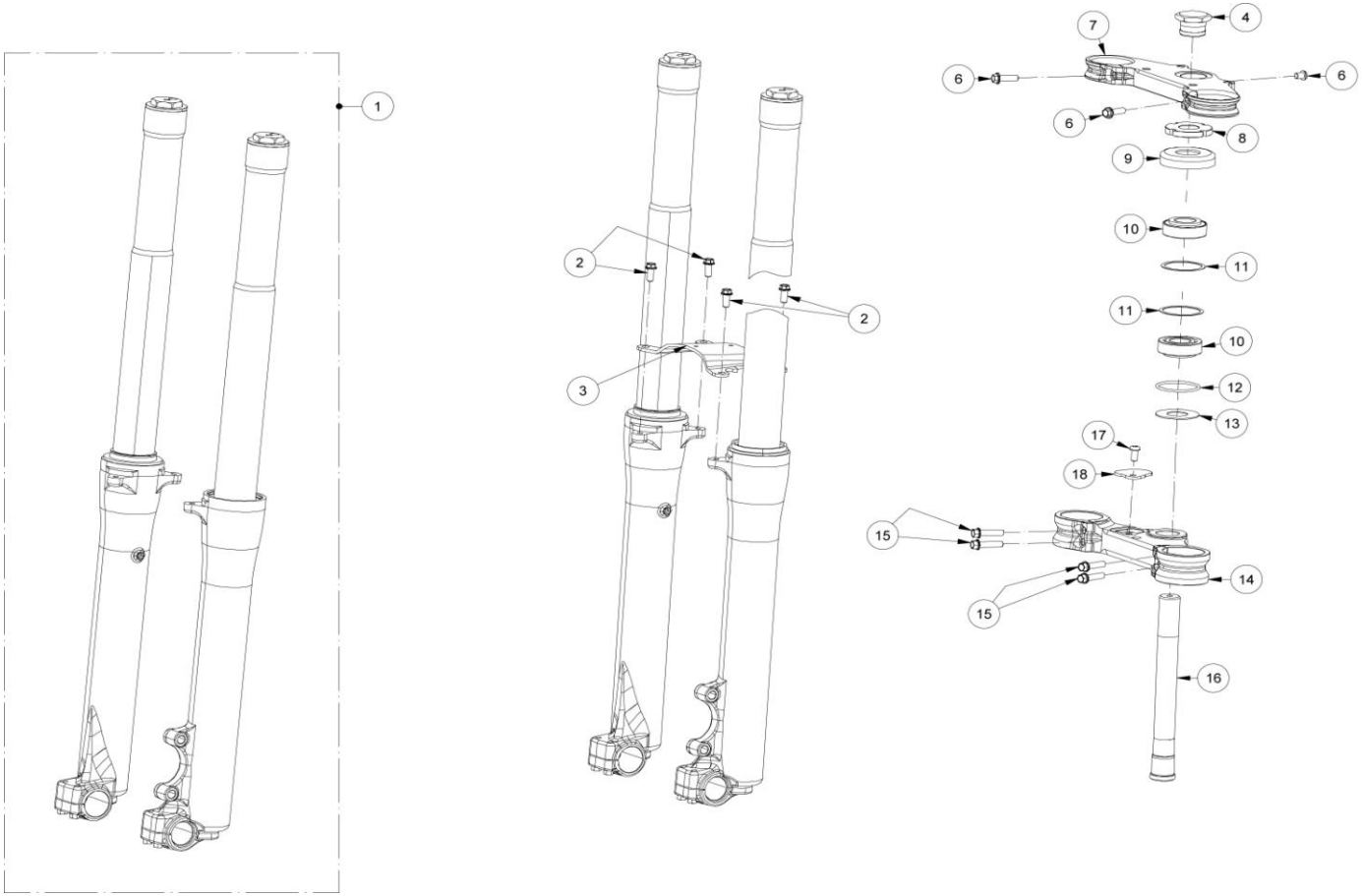
1
2
2
3
4
6
6
6
7
8
9
10
10
11
11
12
13
14
15
15
16
17
18

Nº	DESCRIPCION	DESCRIPTION				125 / 250 / 280 / 300	Cant.
1	CTO.SUSPENSION DELANTERA TECH TXT RACING 2017E4	FORK SUSPENSION SET TECH TXT RACING 2017E4				BT20000GG-CJT-1	1
2	M6X14 TORNILLO HEXAGONAL	M6x14 HEXAGONAL SCREW				T0206014	4
3	PUENTE SUSPENSION	FRONT SUSPENSION UNION				BT21500R3009	1
4	TUERCA CIEGA SUPERIOR DIRECCIÓN	NUT TOP STEERING AXLE				BT280410030	1
6	TORNILLO EXAGONALES CON ARANDELA M6X20	M6X20 HEXAGONAL WITH WASHER SCREW				T0206020	2
7	BRIDA SUPERIOR SUSPENSION TRIAL DIAM.39	UPPER FORK CLAMP DIAM.39				BT22000GG-CJT-1	1
8	TUERCA INFERIOR DE DIRECCIÓN	NUT UNDER FORK CLAMP				BT280410029	1
9	GUARDAPOLVO COJINETES DIRECCIÓN SUP.	BEARING STEERING DUST COVER				BEP250210026	1
10	COJINETE DIRECCIÓN	BEARING STEERING DUST COVER				BT280210008	2
11	ARANDELA 22,4x36x0,7	22,4x36x0,7 WASHER				T4022036	2
12	TÓRICA DIRECCIÓN 37X2,5	37X2,5 O'RING STEERING				BEP250210012	1
13	ARANDELA INFERIOR COLUMNA DIRECCION	WASHER STEERING				BT280210026	1
14	BRIDA INFERIOR SUSPENSION	LOWER FORK CLAMP				BT21000GG-CJT-1	1
15	TORNILLO HEXAGONAL CON ARANDELA M6X25	M6X25 HEXAGONAL WITH WASHER SCREW				T0206025	4
16	EJE DIRECCIÓN	AXLE STEERING				BT280214003	1
17	TORNILLO ULS M6x12	M6x12 ULS SCREW				T0506012	1
18	PLATINA TAPA CLAUSOR	HOLE CLAUSOR COVER				BT280210077/1	1

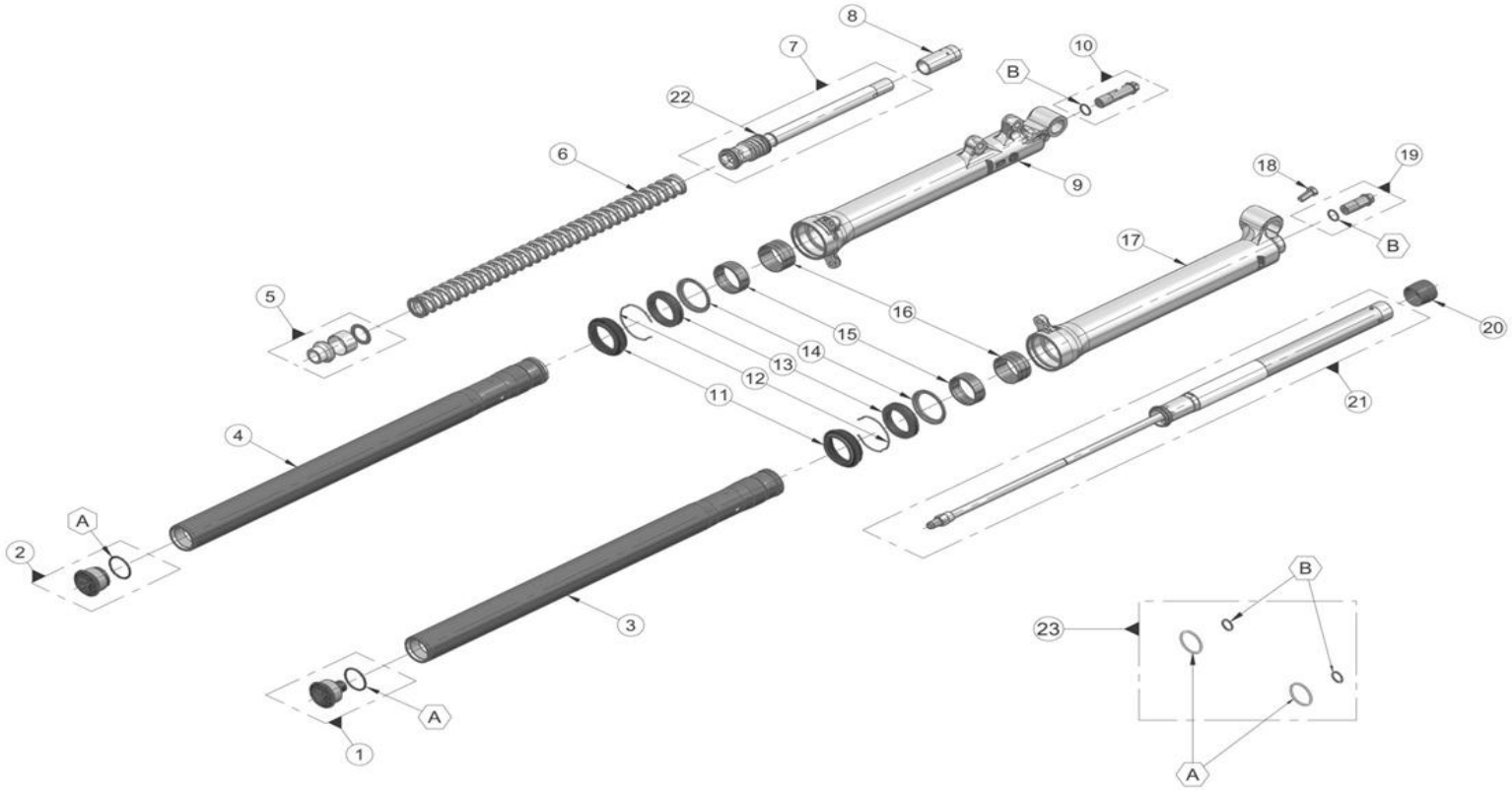
8
7
10
B
22
6
9
18
19
17
B
5
16
20
15
14
13
12
11
21
4
A
2
B
23
3
A
1
A

Nº	DESCRIPCION	DESCRIPTION				125 / 250 / 280 / 300	Cant.
1	CTO. TAPON REGULACION EXTENSION	ADJUSTMENT PLUG EXTENSION SET				BT201203013	1
2	CTO.TAPON REGULACION COMPRESION	COMPRESSION ADJUSTMENT PLUG SET				BT201253013	1
3	BARRA SUSPENSION DERECHA	RIGHT BAR SUSPENSION				BT201103013	1
4	BARRA SUSPENSION IZQUIERDA	LEFT BAR SUSPENSION				BT201153013	1
5	CTO. PRECARGA	SET PRELOAD				BT201653013	1
6	MUELLE SUSPENSION	SPRING SUSPENSION				BT201703013	1
7	GRUPO BOMBA	PUMP GROUP				BT201803013	1
8	CONO LIMITADOR IZQUIERDO	LEFT LIMITER CONE				BT201603013	1
9	BOTELLA SUSPENSION IZQUIERDA	LEFT SUSPENSION BOTTLE				BT201053013	1
10	TORNILLO REGULACION	SCREW ADJUSTMENT				BT201763013	1
11	GUARDAPOLVO SUSPENSION	DUST COVER SUSPENSION				BT201303012	1
12	SEEGER SUSPENSION	CIRCLIP SUSPENSION				BT201353013	1
13	RETEN SUSPENSION	SEAL SUSPENSION				BT201403012	1
14	ANILLO SELLO ACEITE	OIL SEAL RING				BT201453012	1
15	GLACIER SUSPENSION	GLACIER SUSPENSION				BT201503013	1
16	GLACIER BOTELLA SUSPENSION	GLACIER SUSPENSION BOTTLE				BT201513013	1
17	BOTELLA SUSPENSION DERECHA	RIGHT SUSPENSION BOTTLE				BT201003012	1
18	ALLEN 8X18 DIN 7984	M8X18 DIN 7984 ALLEN SCREW				BT201853012	1
19	CONJUNTO TORNILLO BOMBA HIDRÁULICA	GROUP LOCK SCREW HYDRAULIC PUMP				BT20185GG-CKA-1	1
20	CONO LIMITADOR DERECHO	CONE LIMIT RIGHT				BT20155GG-CKA-1	1
21	CONJUNTO CARTUCHO	GROUP CARTRIDGE				BT20220GG-CKA-1	1
22	ANILLO DE SOPORTE LIMITE MUELLE	SUPPORT RING FOR SPRING LIMIT				BT20195GG-CKA-1	1
23	CONJUNTO DE ANILLOS SELLADORES	GROUP RINGS SEAL				BT20145CT-CKA-1	1

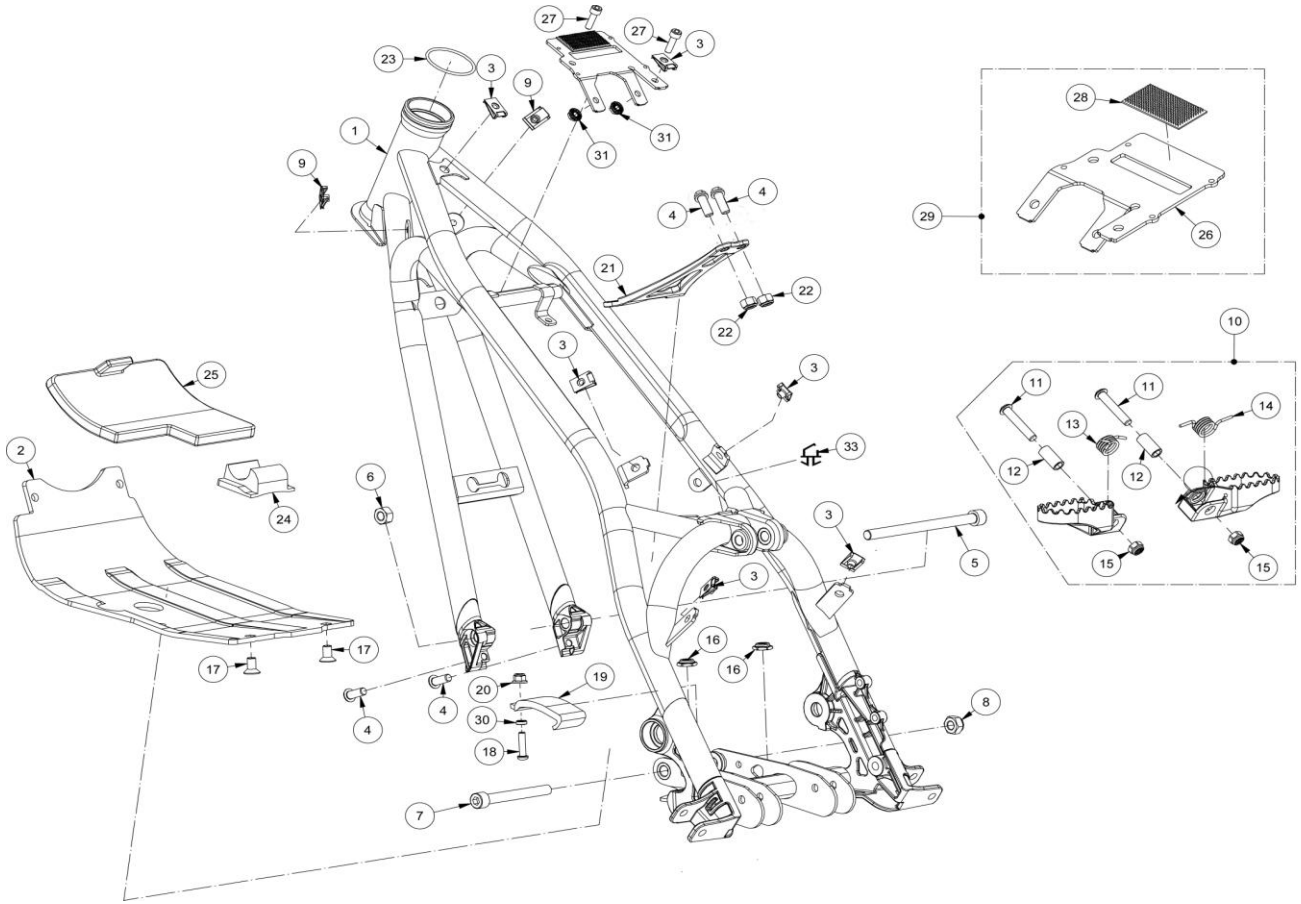
27
27
3
23
3
9
1
31
31
9
4
4
29
28
26
21
22
22
10
3
3
25
11
11
14
13
33
2
12
12
6
24
3
5
15
15
3
16
16
17
17
20
19
8
4
4
30
18
7

Nº	DESCRIPCION	DESCRIPTION				125 / 250 / 280 / 300	Cant.
1	CHASIS TRIAL	TRIAL FRAME				BT10000GG-CGI-1	1
2	PLACA PROTECCIÓN MOTOR	TRIAL ENGINE PROTECTOR PLATE				BT10000013012	1
3	TUERCA NUT 956 RAPIDA M6	M6 CHIMNEY NUT				T2606000	8
4	HEXAGONAL 8X20	8X20 HEXAGONAL				T0208020	2
5	ALLEN M10X140 ZINCADO 12.9	M10X140 ALLEN SCREW				T0310140	1
6	TUERCA ESPECIAL M10	SPECIAL M10 NUT				BT280210069	1
7	ALLEN M10x90	M10X90 ALLEN SCREW				T0301090	1
8	TUERCA AUTOBLOCANTE M10 X 1,5	SPECIAL M10 X 1,5 NUT				T3110003	1
9	GRAPA FIJA TAPA LATERAL	SPECIAL NUT TO FIX SIDE COVER				BX250020029	2
10	CTO. ESTRIBOS TXT RACING	FOOTPEGS KIT				BT14005CT-CGA-1	1
11	TORNILLO ULS M8x45	M8x45 ULS SCREW				T0508045	2
12	DISTANCIADOR	SPACER				BT27910006	2
13	MUELLES ESTRIBERA IZQUIERDA	LEFT FOOTPEG SPRING				M100004	1
14	MUELLE ESTRIBERA DERECHA	RIGHT FOOTPEG SPRING				M100003	1
15	TUERCA AUTOBLOCANTE M8 DIN985	M8 SELF-LOCKING NUT DIN985				T2108001	2
15A	ARANDELA 8x16x1,5	8x16x1,5 WASHER				T4008016	2
16	CASQUILLO PROTECTOR CÁRTER	CRANKCASE BUSH PROTECTOR				BT280310883	2
17	TORNILLO ALLEN CONICO M8X16	ALLEN TAPERED SCREW M8X16				T0408016	2
18	TORNILLO ULS 6X25	ULS 6X25 SCREW				T0506025	1
19	PROTECTOR CADENA A CHASIS	CHAIN PROTECTOR				BT280212026	1
20	TUERCA AUTOBLOCANTE DIN-6926 M6 CON ARANDELA ZN	M6 SELF-LOCKING NUT WITH WASHER				T2206002	1
21	TIRANTE CILINDRO	BRACE CYLINDER				BT280110050	1
22	TUERCA AUTOBLOCANTE M-8 ALTA	SELF-LOCKING NUT M8 HIGH				T2108002	2
23	JUNTA TORICA PIPA	O-RING STEERING COLUMN				BT100503013	1
24	GOMA PROTECTOR TRASERO MOTOR	REAR ENGINE PROT. RUBBER				BT280336029	1
25	GOMA PROTECTOR DELANTERO MOTOR	FRONT ENGINE PROT. RUBBER				BT280236030	1
26	SOPORTE CDI	CDI SUPPORT				BT10001GG-CBN-1	1
27	TORNILLO ALLEN M6X20	M6X20 ALLEN SCREW				T0306020	2
28	CINTA DE CIERRE ADHESIVA	LOCKING ADHESIVE TAPE				BT51120GG-CBN-1	1
29	CONJUNTO SOPORTE CDI	CDI SUPPORT SET				BT10001CT-CBN-1	1
30	CASQUILLO FIJA PROTECTOR CHASIS-CADENA	BUSH FRAME-CHAIN GUARD				BC250014050	1
31	TUERCA M6 CON BALONA ESTRIADA	M6 NUT				T2206000	2
33	CLIP CABLE INSTALACIÓN	CLIP ELECTRICAL WIRE				BE250410984	1

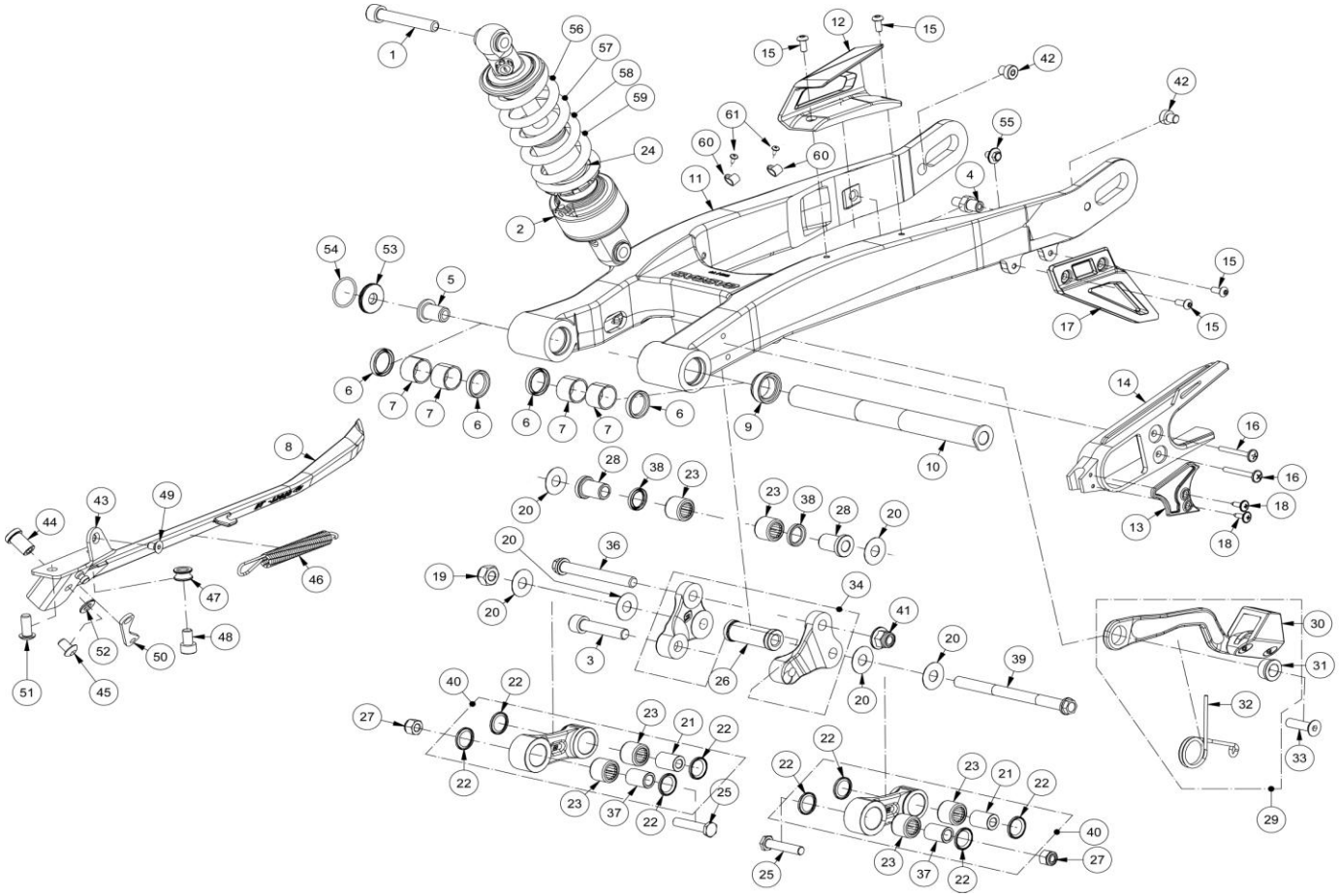
1
56
57
58
59
24
2
12
15
15
42
42
61
60
60
55
11
4
54
53
5
15
17
15
6
7
7
6
6
7
7
6
9
10
14
16
16
18
18
13
8
28
38
23
20
23
38
28
20
43
49
44
20
36
19
20
34
41
47
46
48
52
50
51
45
3
26
20
39
20
30
31
32
33
29
40
22
27
23
21
22
22
23
37
22
25
22
22
23
21
22
40
27
25
23
37
22

Nº	DESCRIPCION	DESCRIPTION			125	250 / 280 / 300	Cant.
1	ALLEN 10X63	10X63 ALLEN SCREW			BT35000013011	BT35000013011	1
2	AMORTIGUADOR TRIAL	REAR SHOCK ABSORBER			BT30000GG-CJY-1	BT30000GG-CJT-1	1
3	TORNILLO ESPECIAL	SPECIAL SCREW			T0310046	T0310046	1
4	GUIA PINZA DE FRENO	REAR CALIPER GUIDE			BT671153013	BT671153013	1
5	TORNILLO EJE BASCULANTE TRIAL	SWING-ARM AXLE SCREW			BT280212009	BT280212009	1
6	RETÉN 20-26-4 870 N BASCULANTE	20-26-4 OIL SEAL			C220001	C220001	4
7	GLACIER	BEARING			BT280212032	BT280212032	4
8	CABALLETE TRIAL 99	SIDE STAND BRACKET			BT280712010	BT280712010	1
9	CASQUILLO GUÍA EJE BASCULANTE	SWING-ARM AXLE BUSHING			BT280212108	BT280212108	1
10	EJE BASCULANTE TRIAL	SWING-ARM AXLE			BT44500R3009	BT44500R3009	1
11	BASCULANTE TRIAL	TRIAL SWING-ARM			BT40000GG-CGS-1	BT40000GG-CGS-1	1
12	CUBRECADENAS	CHAIN COVER			BT42040RA3011	BT42040RA3011	1
13	PROTECTOR PIÑÓN TRIAL 2002	PINION PROTECTOR			BT280236021	BT280236021	1
14	PATÍN CADENA	CHAIN GUIDE			BT280412015	BT280412015	1
15	ULS 5X12	5X12 ULS			T0505012	T0505012	4
16	REMACHE ALUMINIO 5X20	RIVET			T4505020	T4505020	2
17	PROTECTOR CORONA TRIAL 2003	SPROCKET PROTECTOR			BT57350RA3011	BT57350RA3011	1
18	TORNILLO ROSCA-CHAPA 4.2X12	4,2X12 SCREW			T259349	T259349	2
19	TUERCA AUTOBLOCANTE M10X1,5	SELF-LOCKING NUT M10X1,5			T3110003	T3110003	1
20	ARANDELA REGLAJE 10.5X26X0.5	10.5X26X0.5 WASHER			T4001026	T4001026	6
21	CASQUILLO SUSPENSIÓN DIAM. 10	SUSPENSION BUSHING			BT27712005	BT27712005	2
22	RETÉN 15X21X2 / 15X21X2 OIL SEAL	15X21X2 OIL SEAL			C230001	C230001	8
23	COJINETE AGUJAS 15BM2116	NEEDLE BEARING			BT27714009	BT27714009	6
24	TOPE AMORTIGUADOR	SHOCK ABSORBER END OF TRAVEL			BT311003013	BT311003013	1
25	TORNILLO ESPECIAL BIELETA 8X38	8X38 SPECIAL SCREW			T0118038	T0118038	2
26	CASQUILLO DISTANCIADOR BALANCÍN	ARTICULATION SPACER BUSHING			BT32100R3009	BT32100R3009	1
27	TUERCA AUTOBLOCANTE M8 ALTA	SELF-LOCKING NUT			T2108002	T2108002	2
28	CASQUILLO BALANCÍN 99	ARTICULATION BUSHING			BT27914014	BT27914014	2
29	CTO. TENSOR CADENA	CHAIN TENSIONER ASSY.			BT42000RCT3009	BT42000RCT3009	1
30	GOMA TENSOR CADENA	TENSIONER CHAIN RUBBER			BT42010RA3010	BT42010RA3010	1
31	CASQUILLO TENSOR CADENA	CHAIN TENSIONER BUSHING			B560000	B560000	1
32	MUELLE TENSOR CADENA	CHAIN TENSIONER SPRING			M122000	M122000	1
33	ALLEN CONICO 8X30 TENSOR CADENA	8X30 CONIC ALLEN			T0408030	T0408030	1

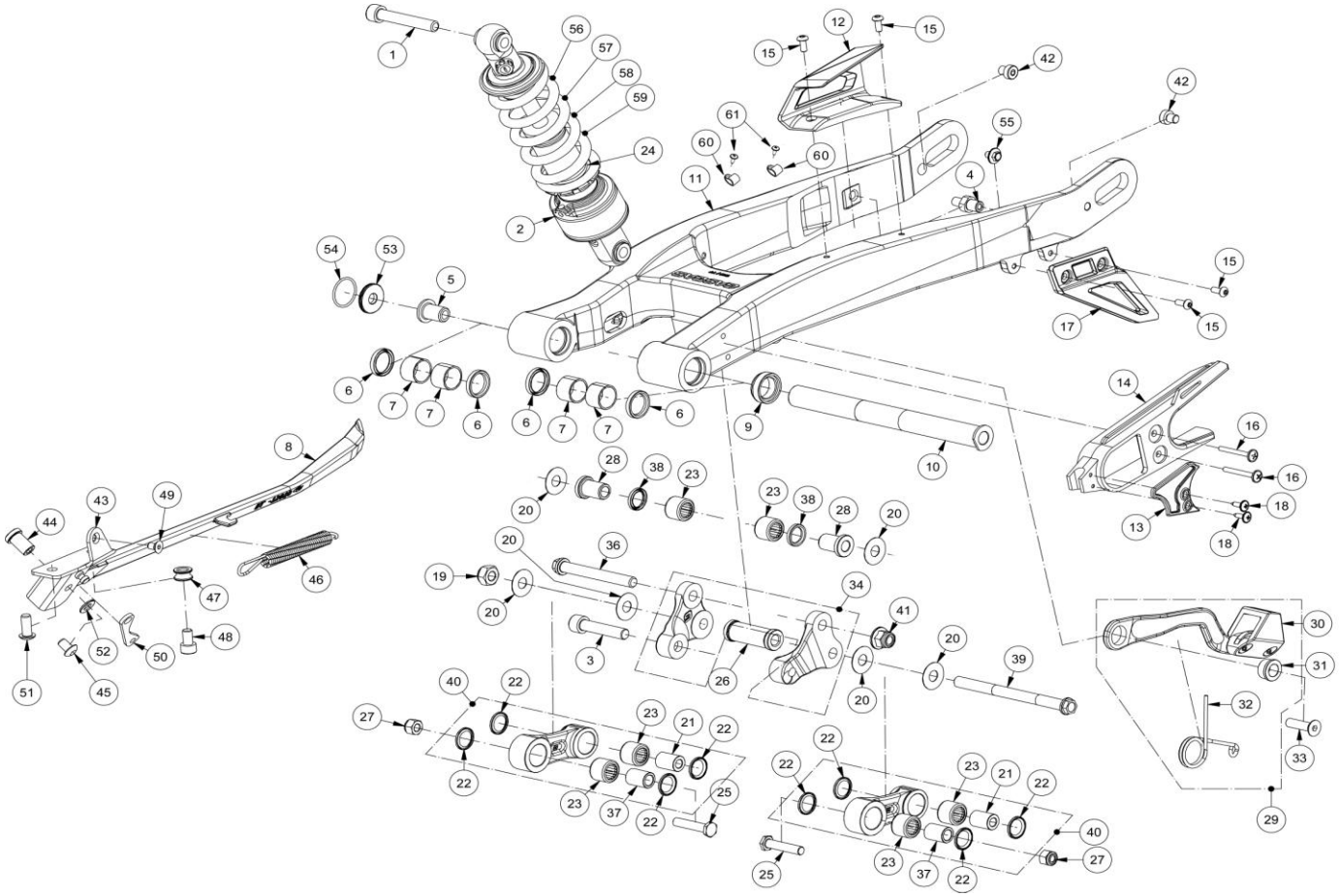
1
56
57
58
59
24
2
12
15
15
42
42
61
60
60
55
11
4
54
53
5
15
17
15
6
7
7
6
6
7
7
6
9
10
14
16
16
18
18
13
8
28
38
23
20
23
38
28
20
43
49
44
20
36
19
20
34
41
47
46
48
52
50
51
45
3
26
20
39
20
30
31
32
33
29
40
22
27
23
21
22
22
23
37
22
25
22
22
23
21
22
40
27
25
23
37
22

Nº	DESCRIPCION	DESCRIPTION			125	250 / 280 / 300	Cant.
34	CTO. BALANCIN TRIAL RAGA 2012 LINK 1	ROCKER ARM SET LINK 1			BT30000083012	BT30000083012	1
36	TORNILLO ESPECIAL M10X80X1.25 12.9	M10X80X1.25 SCREW			T0210080	T0210080	1
37	CASQUILLO SUSPENSIÓN DIAM.8	DIAM. 8 SUSPENSION BUSHING			BT27712014	BT27712014	2
38	RETÉN 15-21-3-8170N BASC. BAL.	15-21-3-8170N OIL SEAL			C230000	C230000	2
39	TORNILLO ALLEN M10X1,25	ALLEN SCREW M10X1,25			BT35000033012	BT35000033012	1
40	BIELETA ALUMINIO TRIAL COMPLETA	ALUMINIUM ROD SET			BT30000063012	BT30000063012	2
41	TUERCA AUTOBLOCANTE M10 X 1,25	M10X1,25 SELF-LOCKING NUT			T21010003	T21010003	1
42	TORNILLO ESPECIAL UFK M8x8 10,9	SPECIAL UFK SCREW M8x8 10.9			T0310808	T0310808	2
43	SOPORTE CABALLETE	SIDE STAND SUPPORT			BT14210R3009	BT14210R3009	1
44	CASQUILLO GUÍA CABALLETE TRIAL	BUSH, PIVOT SIDE STAND			BT27712011	BT27712011	1
45	ULS 8X16	8X16 ULS BOLT			T0508016	T0508016	1
46	MUELLE CABALLETE	SIDE STAND SPRING			BT14250GG-CAT-1	BT14250GG-CAT-1	1
49	ALLEN CONICO M6X16	M6X16 TAPERED ALLEN SCREW			T0406016N	T0406016N	1
50	EXCÉNTRICA CABALLETE TRIAL HOMO.	ADJUSTER			BT280312025H	BT280312025H	1
51	ULS M8X20	M8x20 ULS SCREW			T0508020	T0508020	1
52	ARANDELA 8x16x1,5	8x16x1,5 WASHER			T4008016	T4008016	1
53	CASQUILLO TAPA EJE BASCULANTE	SWINGARM AXLE CAP			BT43000R3009	BT43000R3009	1
54	JUNTA TORICA NBR Ø25,12x1,78	Ø25,12x1,78 NBR O'RING			ME25632025	ME25632025	1
55	TORNILLO RETENDOR PINZA FRENO	CALIPER BOLT STOPPER			T0236010	T0236010	1
56	MUELLE REIGER K=60N/mm	REIGER SPRING K= 60N/mm			RRS4102	RRS4102	1
57	MUELLE REIGER K=65N/mm	REIGER SPRING K= 65N/mm			RRS4103	RRS4103	1
58	MUELLE REIGER K=70N/mm	REIGER SPRING K= 70N/mm			RRS4104	RRS4104	1
59	MUELLE REIGER K=75N/mm	REIGER SPRING K= 75N/mm			RRS4105	RRS4105	1
60	GUIA PLASTICO LATIGUILLO FRENO TRASERO	BRAKE PLASTIC GUIDE			ET750502809	ET750502809	2
61	ULS ALLEN M4X10 FIJA GUIA LATIGUILLO	M4X10 ULS ALLEN FIXATION			T0504010	T0504010	2

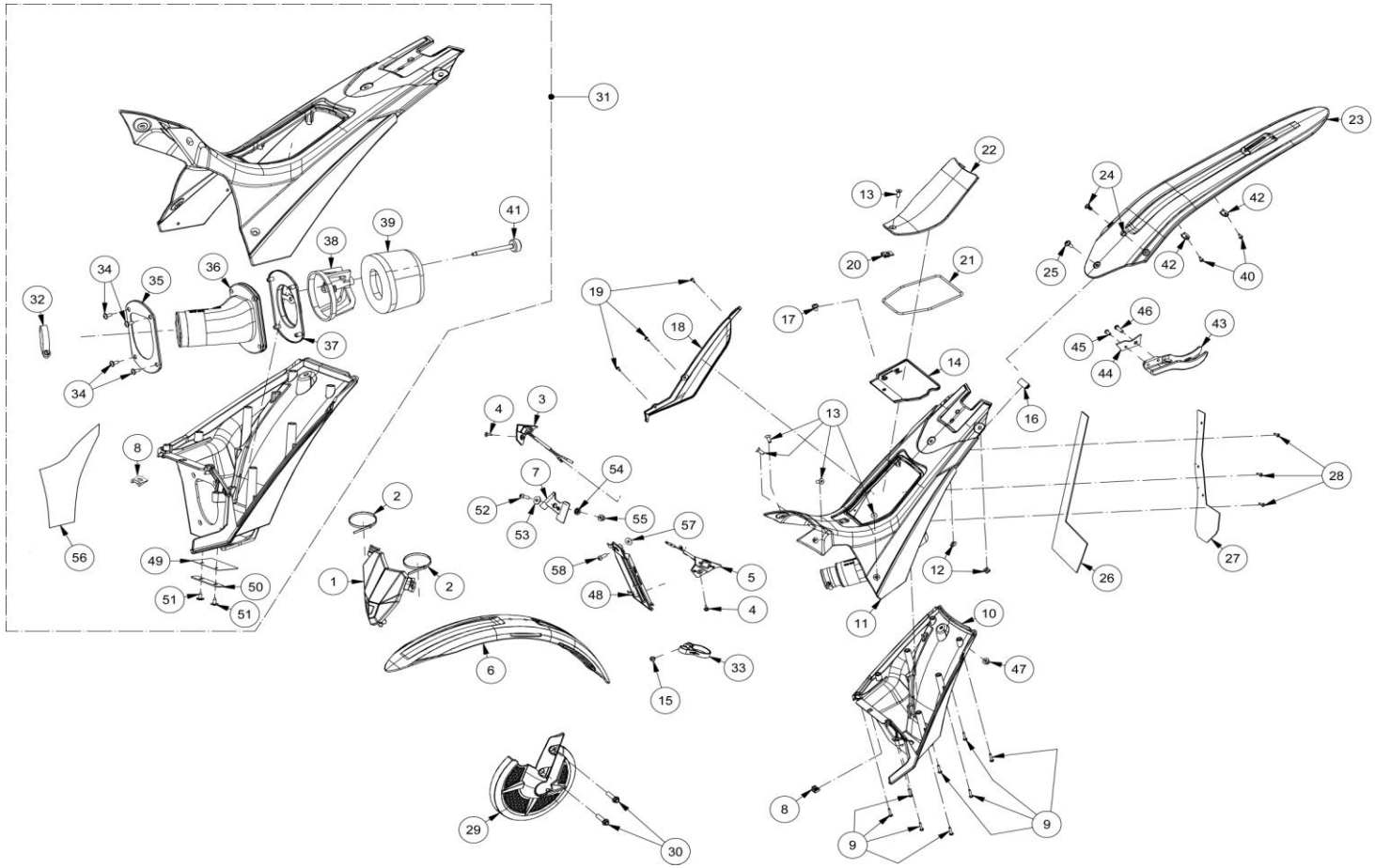
31
41
39
38
36
34
35
32
37
34
8
56
49
50
51
51
2
1
2
6
4
3
7
54
52
53
55
57
58
48
5
4
33
15
29
30
19
18
17
13
22
20
21
14
13
16
12
11
10
47
8
9
9
23
24
42
25
42
40
46
45
44
43
28
27
26

Nº	DESCRIPCION	DESCRIPTION			125	250 / 280 / 300	Cant.
1	CTO.FARO TRIAL RACING BLANCO LEDS LUZ NOCTURNA 2017E4 SIN ADHESI	RACING HEADLIGHT SET LED 2017E4 NO STICKERS				BT90500CT-CKA-1	1
2	BRIDA UNEX	UNEX PLASTIC CLAMP				BE25634007	2
3	TAPA LATERAL DERECHA CON INTERRUPTOR CDI	RIGHT SIDE COVER WITH CDI SWITCH				BT915003013	1
4	TORNILLO CHAPA 4.2X13	SCREW 4.2X13				T0804612	2
5	TAPA LATERAL IZQUIERDA CON INTERRUPTOR DE LUCES	LEFT SIDE COVER WITH LIGHTS SWITCH				BT920003013	1
6	CTO.GUARDABARROS DELANTERO	TRIAL FRONT FENDER ASSY				BT91000CT-CJD-1	1
6A	GUARDABARROS DELANTERO SIN ADHESIVO	TRIAL FRONT FENDER ASSY NO STICKERS				BT90000163012	1
7	PROTECTOR TOPE DE DIRECCION	STEERING STOP PROTECTOR				BT170002809	1
8	TUERCA ENJAULADA M6	M6 STANDARD CAGE NUT				T2006010	1
9	TORNILLO ROSCA-PLASTICO 3,5X20	3,5X20 SCREW THREAD				T0803020	8
10	CAJA FILTRO TRIAL	AIR CLEANER BOX				BT790003013	1
11	CTO. BASE ASIENTO TRIAL	TRIAL SEAT ASSY				BT94000CT-CJT-1	1
12	TUERCA CUADRADA M6 INOX DIN 557	M6 SQUARE NUT INOX DIN 557				T730600000009	2
13	TORNILLO CONICO 6X16 INOX	INOX 6X16 CONIC SCREW				T0406016I	5
14	CONJUNTO VISERA INTERIOR CAJA FILTRO	INTERNAL AIRFILTER BOX COVER SET				BT798103013CT	1
15	TORNILLO GUIA LATIGUILLO	HOSE GUIDE SCREW				T259349	1
16	PRENSACABLES SR1789	CABLE GLAND				BT280428006	1
17	TORNILLO ESP.6X12 CON ARANDELA Y FIJADOR INOX	M6X12 SPECIAL SCREW WITH WASHER				BT35000073012	1
18	PROTECTOR ESCAPE TRIAL	EXHAUST PROTECTOR				BT947002811	1
19	REMACHE ALUMINIO 4X12 CABOTA NEGRA	ALUMINIUM RIVET				T4504012N	2
20	GRAPA TUERCA RAPIDA M6	M6 CHIMNEY NUT				T2606000	1
21	TUBO FLEXIBLE SILICONA BASE ASIENTO	SEAT BASE SILICON HOSE				BT795302811	1
22	CTO.TAPA CAJA FILTRO TXT RACING 2017	TRIAL FILTER BOX COVER ASSY TXT RACING 2017				BT79050CT-CJT-1	1
23	CTO.GUARD.TRASERO NEGRO TRIAL RACING 2017E4	TRIAL REAR FENDER ASSY RACING 2017E4			BT93500CT-CJT-1	BT93500CT-CJT-1	1
23A	GUARDABARROS TRASERO SIN ADHESIVO	TRIAL REAR FENDER ASSY RACING 2017E4 NO STIKERS				BT935013013	1
24	TORNILLO ESP.DE PLASTICO NEGRO M6X12	M6X12 BLACK ESPECIAL PLASTIC SCREW				BT35000083012	2
25	ULS 6X16 CON ARANDELA ZINCADO	6X16 ULS WITH WASHER				T0556016	1
26	AD. PROTECTOR CAJA FILTRO	AIR CLEANER PROTECTOR SITCKER				BT79560RA3010	1
27	GOMA PROTECCIÓN CAJA FILTRO	AIR CLEANER BOX PROTECTOR RUBBER				BT795402811	1
28	TORN. ESPECIAL PLASTICO 4X12 CELO RF87T ZINCADO	4X12 SPECIAL SCREW				T0804012	3
29	PROTECTOR DISCO FRENO	FRONT BRAKE DISK PROTECTOR				BT94100GG-CAS-1	1
30	TORNILLO PINZA FRENO DELANTERA INFERIOR 8X1.25X36.5	SCREW				BT280022071	2
31	CTO. CAJA FILTRO TRIAL PRO SIN ADHESIVO	PRO FILTER BOX SET NO STICKERS				BT79000CT-CJD-1	1
32	ABRAZADERA S56/9 /	CLAMP				MT280316132	1

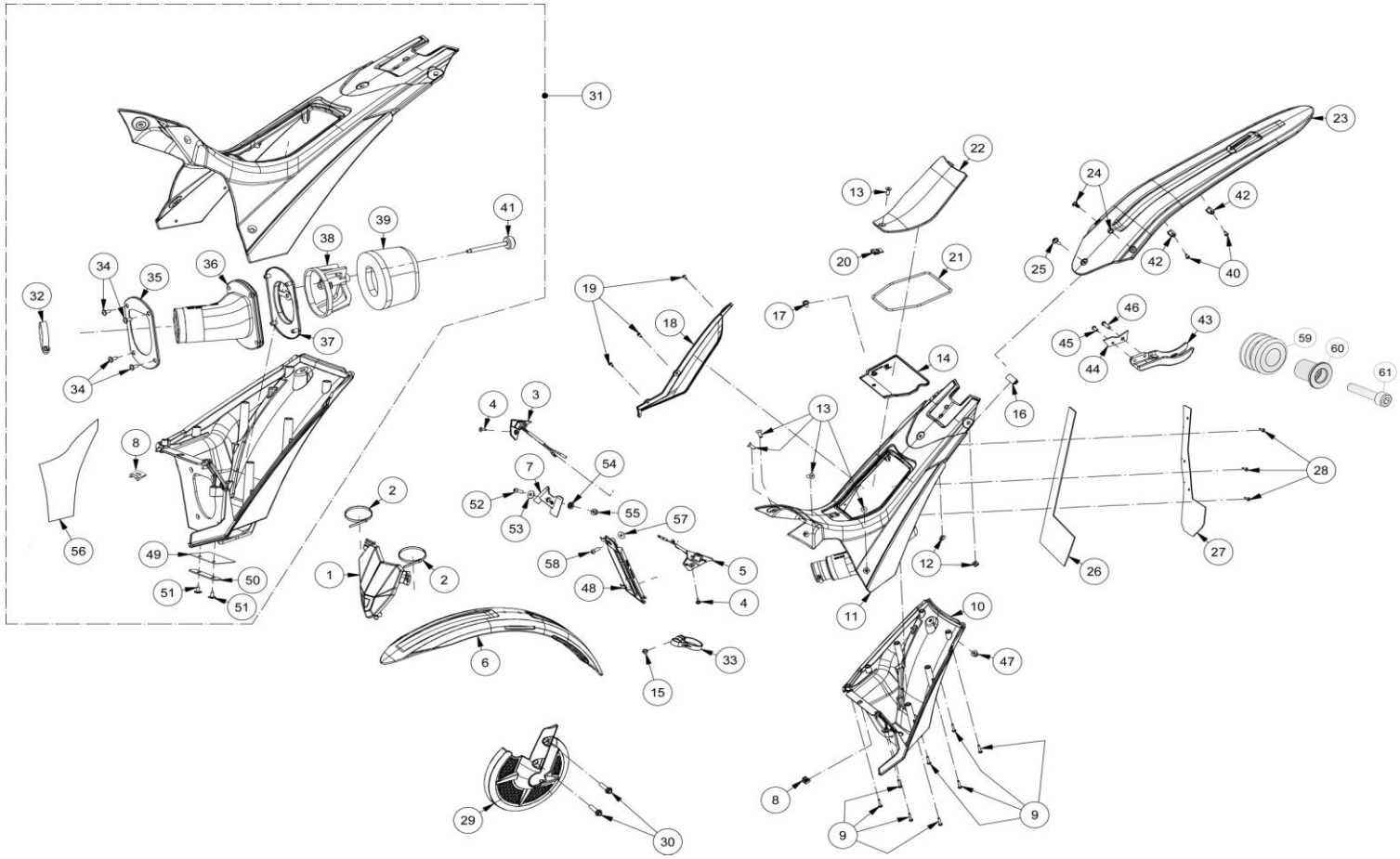
31
41
39
38
36
34
35
32
37
34
8
56
49
50
51
51
2
1
2
6
4
3
7
54
52
53
55
57
58
48
5
4
33
15
29
30
19
18
17
13
22
20
21
14
13
12
11
10
47
8
9
9
16
26
28
27
23
24
42
25
42
40
46
45
44
43
59
60
61

Nº	DESCRIPCION	DESCRIPTION			125	250 / 280 / 300	Cant.
33	GUIA LATIGUILLO FRENO DELANTERO	BREAK HOSE GUIDE				BT21600RA3010	1
34	ULS 4X10 NEGRO CON ABRAZADERA	ULS 4X10 BOLT				T0554010N	4
35	PLATINA EXTERIOR SOPORTE JAULA FILTRO TRIAL 2002	EXTERNAL PLATE				BT280228021	1
36	TOBERA CAJA FILTRO TRIAL SXXI	TUBE, AIR CLEANER CONNECT.				BT792002811	1
37	PLATINA INTERIOR SOPORTE JAULA FILTRO TRIAL 2002	INNER PLATE				BT280228020	1
38	JAULA FILTRO AIRE TRIAL 280-2002	AIR CLEANER CAGE				BT280228002	1
39	FILTRO AIRE TRIAL XXI	AIR CLEANER				BT280328000	1
40	TORNILLO ROSCA CHAPA 3,6x10	3,6X10 SCREW				T36040101910B	2
41	VARILLA FILTRO TRIAL 2002	AIR CLEANER ROD				BT795202811	1
42	GRAPA SUJECCIÓN CABLE	CABLE FIXING CLIP				ET750502809	2
43	PROTECTOR DISCO TRASERO	REAR BRAKE DISC GUARD				BT57050R3009	1
44	SOPORTE PROTECTOR DE DISCO	DISC GUARD SUPPORT				BT280222051	1
45	TORNILLO ALLEN M5x25	M5x25 ALLEN SCREW				T0305025	1
46	TORNILLO ULS M6x20	M6x20 ULS SCREW				T0506020	1
47	TUERCA M6	M6 NUT				T2206002	1
48	REJILLA RADIADOR TRIAL 2017	RADIATOR GUARD 2017				BT73050GG-CKA-1	1
49	VÁLVULA VACIADOR CAJA FILTRO TRIAL	TRIAL FILTER BOX VALVE				BT280428032	1
50	PISADOR VÁLVULA VACIADOR CAJA FILTRO	BOX VALVE SUJECTION				BT280428045	1
51	TORNILLO ROSCA-CHAPA 4,2X10 NEGRO	BLACK 4,2X10 SCREW				T0604210	2
52	TORNILLO ULS TOPE DE DIRECCION	STEERING STOP PROTECTOR ULS SCREW				T0506020	1
53	CASQUILLO SEPARADOR TOPE DE DIRECCION	STEERING STOP PROTECTOR BUSH				BE250032060	1
54	ARANDELA 6,5X16X1,5	WASHER 6,5X16X1,5				T4006016	1
55	TUERCA AUTOBLOCANTE	AUTOLOCK NUT				T2206002	1
56	ADHESIVO ANTICALORICO PROTECTOR CAJA FILTRO	AIR FILTER PROTECTOR STICKER				BT795502811	1
57	CASQUILLO 12X6,5X7,5	BUSH 12X6,5X7,5				BT10910GG-CGI-1	1
58	TORNILLO ALLEN 6x25	6x25 ALLEN SCREW				T0306025	1
59	SILENTBLOCK	SILENTBLOCK				BE250026005	1
60	CASQUILLO	CAP				BE250032060	1
61	ALLEN 5x25	ALLEN 5x25				T0305025	1

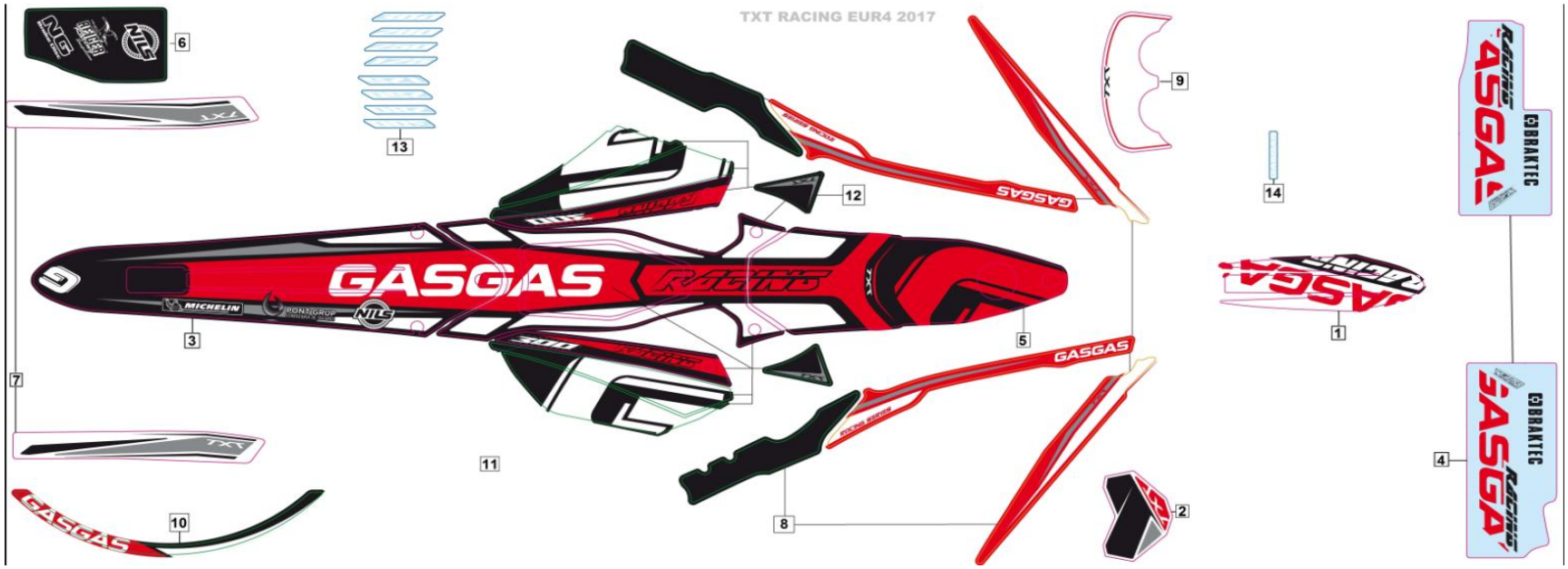
TXT RACING EUR4 2017
GASGAS
RACING
MICHELIN
NILS
BRAKTEC
1
2
3
4
5
6
7
8
9
10
11
12
13
14

Nº	DESCRIPCION	DESCRIPTION	125	250	280	300	Cant.
1	ADH. GUARDABARROS DELANTERO	FRONT FENDER DECAL				BT95001GG-CJT-1	1
2	ADH.FARO RACING	HEADLIGHT RACING DECAL				BT95020GG-CJT-1	1
3	ADH.GUARDABARROS TRASERO	REAR FENDER DECAL				BT95120GG-CJT-1	1
4	ADH. PROTECTOR HORQUILLAS	FRONT FORK PROTECTOR DECAL				BT95010CT-CJT-1	1
5	ADH.DEPOSITO TXT RACING 2017	FUEL TANK DECAL TXT RACING 2017				BT95190GG-CJT-1	1
6	ADH. SPONSORS CAJA FILTRO	SPONSORS AIRBOX DECAL				BT95200GG-CJT-1	1
7	CTO.ADH.BASCULANTE	SWINGARM SET DECAL				BT95125CT-CJT-1	1
8	CTO.ADH. PROTECTOR CHASIS	FRAME GUARD DECAL				BT95090CT-CJT-1	1
9	ADH.FARO TRIAL HOMOLOGADO	HEADLIGHT HOMOLOGATED DECAL				BT95021GG-CAS-1	1
10	ADH. RUEDAS	WHEEL DECAL				BT95220CT-CJD-1	1
11	KIT ADH.COMPLETO TXT RACING 2017	COMPLETE SET RACING TXT 2017				BT95000CT-CJT-1	1
12	CTO.ADH.CAJA FILTRO	AIRBOX DECAL				BT95180CT-CJT-1	1
13	ADH.ASIENTO CILINDRADA LADO DERECHO	ENGINE CAPACITY DECAL (RIGHT)	BT95135GG-CJY-1	BT95135GG-CJW-1	BT95135GG-CJV-1	BT95135GG-CJT-1	1
13	ADH.ASIENTO CILINDRADA LADO IZQUIERDO	ENGINE CAPACITY DECAL (LEFT)	CT95136GG-CJY-1	BT95136GG-CJW-1	BT95136GG-CJV-1	BT95136GG-CJT-1	1
14	ADH. BRIDA INF. SUSPENSION		BT95000703012	BT95000703012	BT95000703012	BT95000703012	1

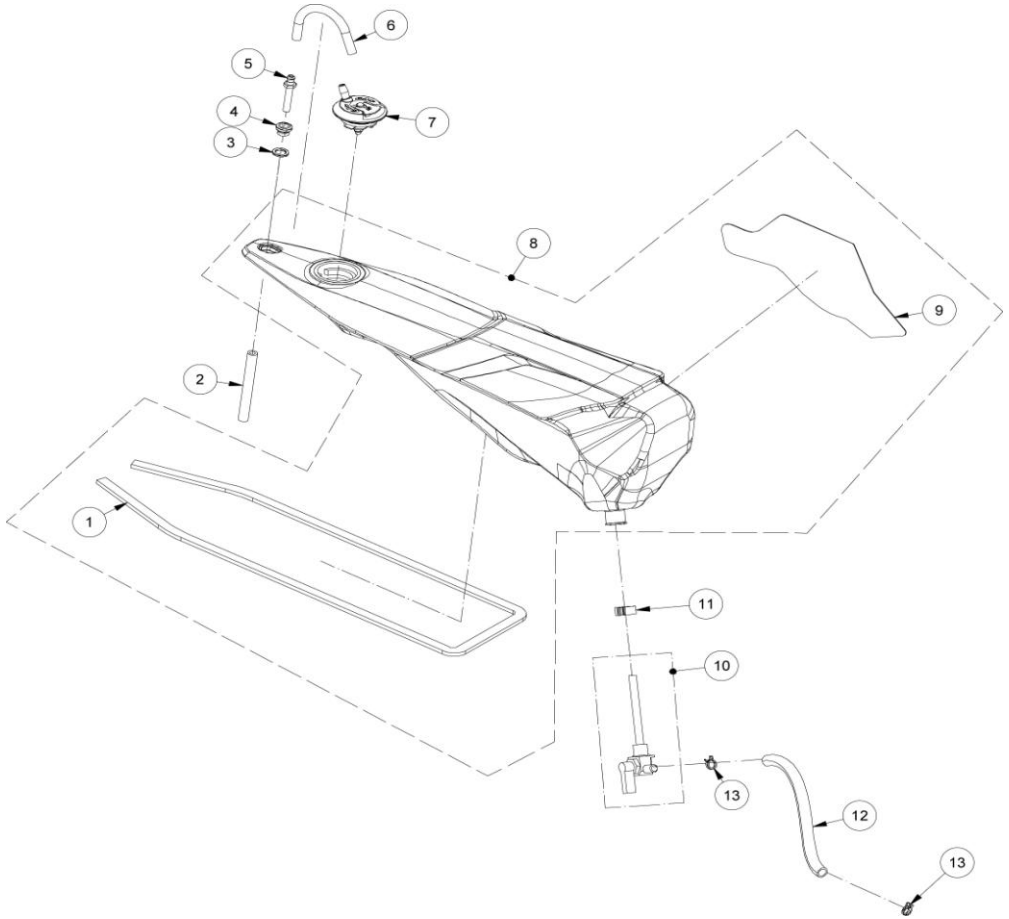
6
5
4
3
7
8
9
2
1
11
10
13
12
13

Nº	DESCRIPCION	DESCRIPTION			125	250 / 280 / 300	Cant.
1	GOMA INSONORIZA DEPOSITO GASOLINA 2012	FUEL TANK RUBBER soundproof 2012				BT80000093012	1
2	TUBO DESVAPORIZADOR TAPON GASOLINA COMPLEMENTARIO	SUPPLEMENTARY FUEL PIPE PLUG fuel vent				BT80000063012	1
3	ARANDELA DE GOMA Ø14.9 X Ø10 X 1.5	Ø14.9 X Ø10 X 1.5 RUBBER WASHER				BT760953013	1
4	CASQUILLO DEPOSITO TRIAL	FUEL TANK BUSH				BT761053013	1
5	TORNILLO DESVAPORIZADOR	FUEL VENT SCREW				BT80000033012	1
6	CTO.TUBO DESVAPORIZADOR GASOLINA	FUEL VENT HOSE SET				BT80000073012	1
7	CTO.TAPON GASOLINA TRIAL	FUEL CAP SET				BT80000053012	1
8	KIT.DEPOSITO GASOLINA	FUEL TANK SET				BT760013013CTR	1
9	PROTECTOR TERMICO DEPOSITO GASOLINA	FUEL TANK HEAT SHIELD				BT960303013	1
10	GRIFO GASOLINA	FUEL VALVE				BIT50010031	1
11	ABRAZADERA COBRA D.17	COBRA CLAMP Ø17				BIT50010033	1
12	TUBO GASOLINA TRIAL	FUEL TUBE				BT780053013	1
13	ABRAZADERA ELÁSTICA NEGRA ALAMBRE 9.3X9.9 2016055	SPRING CLAMP				L200036	2

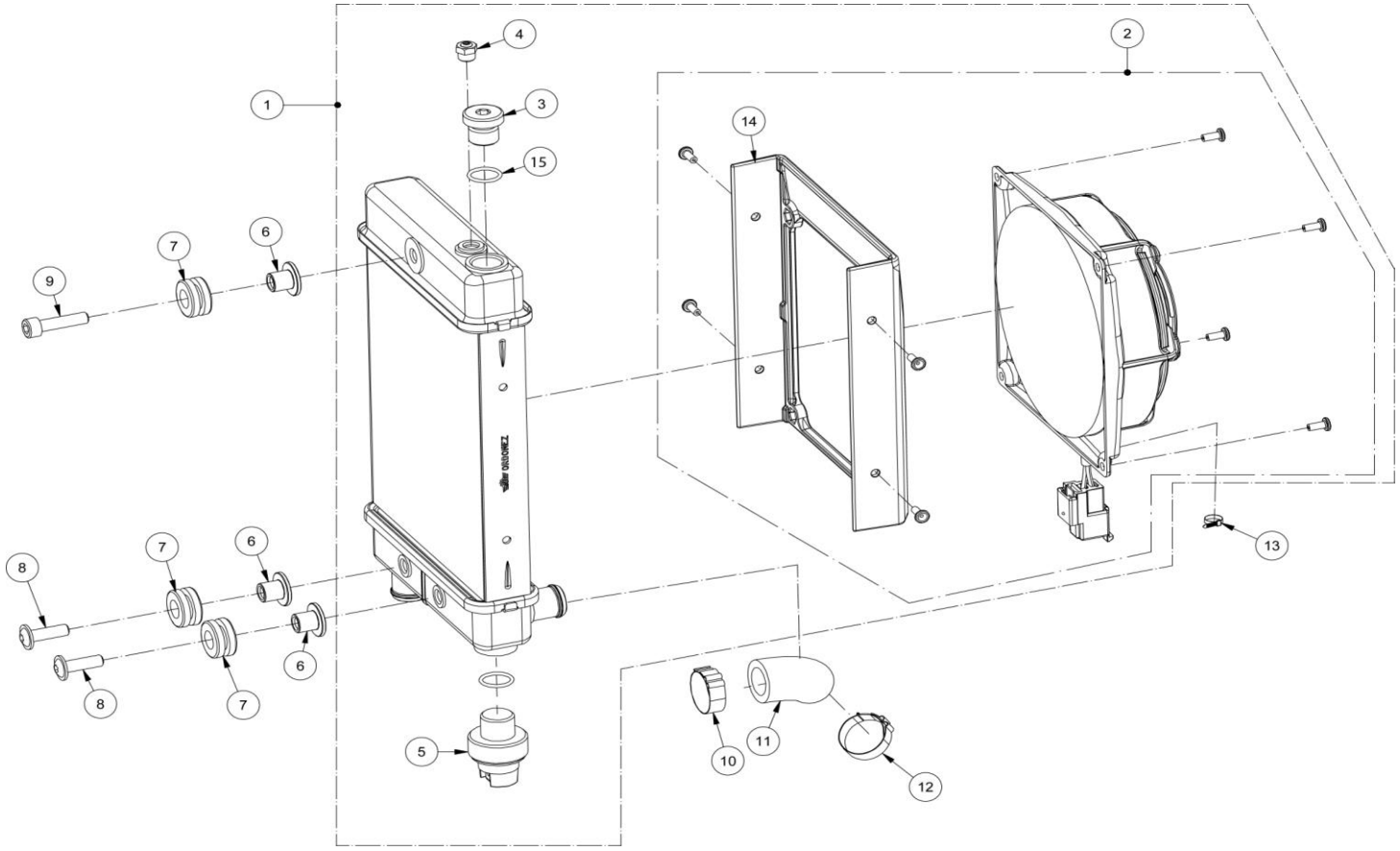
1
2
3
4
5
6
7
8
9
10
11
12
13
14
15

Nº	DESCRIPCION	DESCRIPTION				125 / 250 / 280 / 300	Cant.
1	CONJUNTO RADIADOR	RADIATOR KIT				BT70000CT-CBN-1	1
2	ELECTROVENTILADOR	ELECTROFAN				BT72000GG-CBN-1	1
3	TAPON DE LLENADO RADIADOR	RADIATOR CAP				BT701503013	1
4	VALVULA DE PRESION	PRESSURE VALVE				BT701553013	1
5	TERMOCONTACTO	THERMOSWITCH				BT720103013	1
6	CASQUILLO RADIADOR	RADIATOR BUSH				BT700903013	3
7	GOMA SILENTBLOCK	SILENTBLOCK				G220000	3
8	TORNILLO ULS ALLEN CON ARANDELA M6x25	M6x25 ALLEN SCREW WITH WASHER				T0556020	2
9	TORNILLO ALLEN M6x30	M6x30 ALLEN SCREW				T0306030	1
10	ABRAZADERA COBRA DE 23	COBRA CLAMP Ø23				L200041	1
11	TUBO RADIADOR A CULATA	RADIATOR TO HEAD CYLINDER HOSE				BT710503013	1
12	ABRAZADERA COBRA DE 22	COBRA CLAMP Ø22				L200038	1
13	BRIDA UNEX CORTA 2.5X98	UNEX CALMP				BE25634010	1
14	CARCASA ADAPTADOR	ADAPTER HOUSING				BT72020GG-CBN-1	1
15	ARANDELA COBRE 8x12x1,5	COPPER WASHER 8x12x1,5				T4008012	1

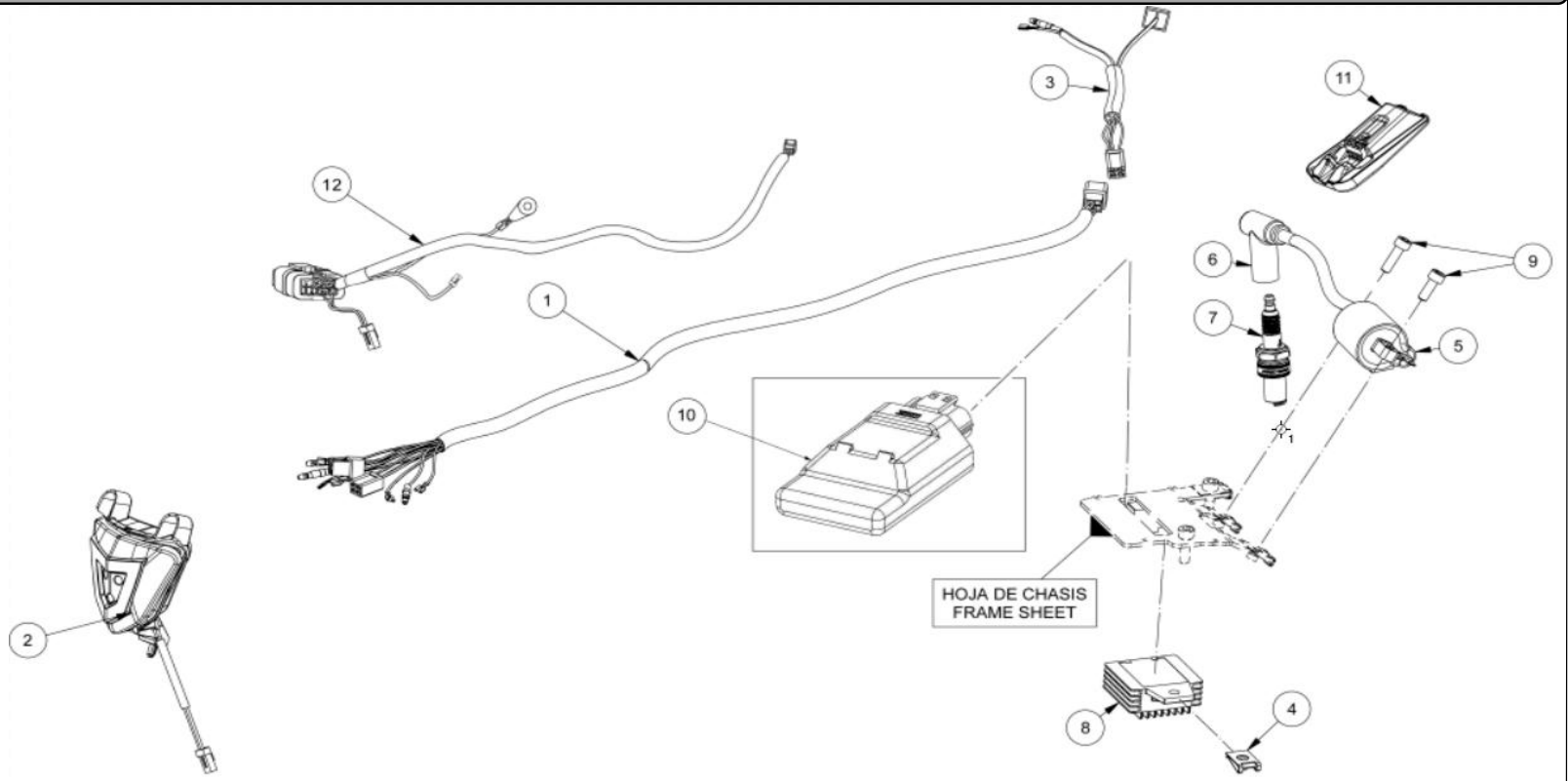
1
2
3
4
5
6
7
8
9
10
11
12
HOJA DE CHASIS
FRAME SHEET

Nº	DESCRIPCION	DESCRIPTION	125	250	280	300	Cant.
1	INSTALACIÓN TRIAL (SERVICIO)	TRIAL INSTALLATION (SERVICE)	ET10000GG-CBN-1	ET10000GG-CBN-1	ET10000GG-CBN-1	ET10000GG-CBN-1	1
2	CTO. FARO RACING	FRONT HEADLIGHT KIT	BT90000063011	BT90000063011	BT90000063011	BT90000063011	1
3	ALARGO INSTALACION PILOTO TRASERO	REAR LIGHT EXTENSION INSTALLATION	ET300102808	ET300102808	ET300102808	ET300102808	1
4	TUERCA NUT 956 RAPIDA M6	M6 CHIMNEY NUT	T2606000	T2606000	T2606000	T2606000	1
5	BOBINA	IGNITION COIL	ET500003013	ET500003013	ET500003013	ET500003013	1
6	PIPA BUJÍA IB05EMH	IB05EMH SPARK PLUG	BE25934000	BE25934000	BE25934000	BE25934000	1
7	BUJÍA BPR5ES	BPR5ES SPARK	M04012000	M04012000	M04012000	M04012000	1
8	REGULADOR ALTERNADOR	ALTERNATOR REGULATO	EE51200GG-CAB-1	EE51200GG-CAB-1	EE51200GG-CAB-1	EE51200GG-CAB-1	1
9	ALLEN 6X20	ALLEN 6X20 BOLT	T0306020	T0306020	T0306020	T0306020	2
10	CDI DIGITAL	DIGITAL CDI	ET51100CT-CKD-1	ET51100CT-CKA-1	ET51100CT-CKA-1	ET51100CT-CKA-1	1
11	FARO PILOTO TRIAL	TRIAL REAR LIGHT SET	ET30000CT2811	ET30000CT2811	ET30000CT2811	ET30000CT2811	1
12	INSTALACION ENCENDIDO HIDRIA DS	TRIAL WIRING HARDNESS	ET70120GG-CKA-1	ET70120GG-CKA-1	ET70120GG-CKA-1	ET70120GG-CKA-1	1

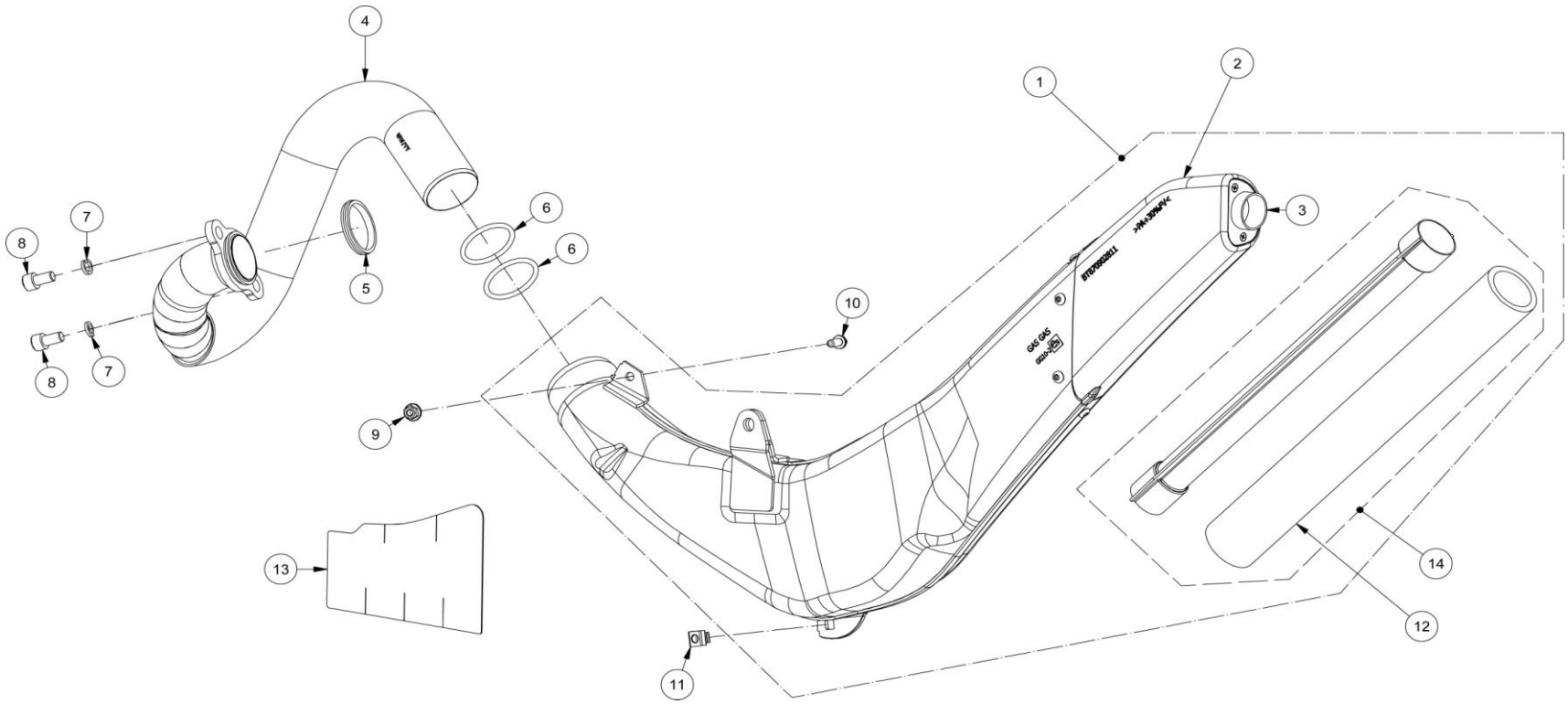
1
2
3
4
5
6
6
7
7
8
8
9
10
11
12
13
14

Nº	DESCRIPCION	DESCRIPTION				125 / 250 / 280 / 300	Cant.
1	CTO. ESCAPE INTERM. Y FINAL	EXHAUST SET				BT860002811	1
2	CAZOLETA SILENCIOSO FINAL	FINAL EXHAUST COVER				BT870802811	1
3	SALIDA INOX FINAL ESCAPE	INOX END EXHAUST				BT870803013	1
4	CURVA ESCAPE TRIAL	TRIAL BEND EXHAUST				BT86000GG-CBF-1	1
5	JUNTA ESCAPE S4 105	EXHAUST GASKET				MT280244012	1
6	TÓRICA SILENCIOSO INTERMEDIO 44,05X3,53	O'RING INT. SILENCER				C290000	2
7	ARANDELA GROVER 8X12X2	GROVER WASHER				T4008314	2
8	TORNILLO ALLEN M6X16	M6X6 ALLEN SCREW				T0308016	2
9	TUERCA CON ARAND. ESTRIADA M6	M6 NUT WITH WASHER				T2206000	1
10	TORNILLO HEXAGONAL CON ARANDELA M6X14	6X14 HEX. WITH WASHER SCREW				T0206012	1
11	TUERCA ENJAULADA M6	M6 STANDARD CAGE NUT				T2006010	1
12	FIBRA ANTICALORICA	HEATPROOF FIBER				BT85000003011	1
13	PROTECTOR CALORICO	HEATPROOF GUARD ADHESIVE				BT96030GG-CBN-1	1
14	TUBO INTERNO CON FIBRA	INNER TUBE WITH FIBER				BT870802511	1

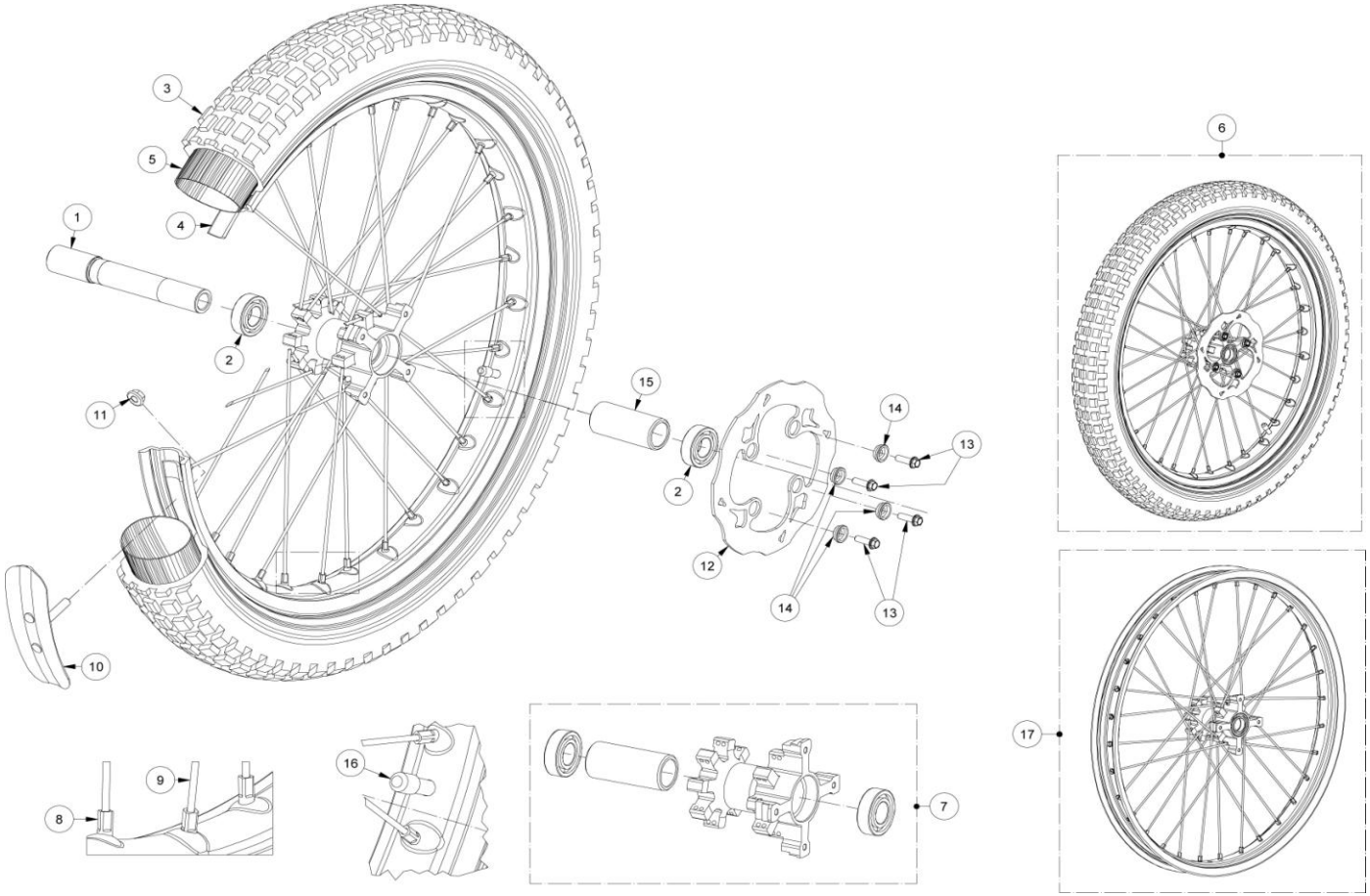
1
2
3
4
5
6
7
8
9
10
11
12
13
14
15
16
17

Nº	DESCRIPCION	DESCRIPTION				125 / 250 / 280 / 300	Cant.
1	EJE RUEDA DELANTERA TRIAL TECH 2017E4	FRONT WHEEL AXLE TECH 2017E4				BT53000GG-CJT-1	1
2	COJINETE	BEARING				ME120136055	2
3	NEUMATICO RUEDA DELANTERA MICHELIN X11	FRONT TYRE	NOT AVAILABLE FROM GAS GAS FACTORY				1
4	GOMA PROTECTOR FLAP 21"	FRONT FLAP TYRE				BE25618028	1
5	CÁMARA DELANTERA	FRONT TUBE				N120000	1
6	CTO. RUEDA DELANTERA TRIAL PRO	FRONT WHEEL KIT				BT50000CT-CJD-1	1
7	CTO. CUBO RUEDA DELANTERA TRIAL	FRONT HUB WHEEL KIT				BT54110CT-CGJ-1	1
8	TUERCA RADIOS 3MM. RUEDA DELANTERA DIA. 6.5	SPOKE NUT				BT27718001	32
9	RADIO 3X257 RUEDA DELANTERA TRIAL NEGRO	BLACK FRONT WHEEL SPOKE				BT54200N2809	32
10	AGARRE CUBIERTA	TYRE CLAMP				BE505002509	1
11	TUERCA CON ARANDELA ESTRIADA M8 ZINCADA	NUT WITH WASHER				T2208001	1
12	DISCO FRENO DELANTERO	FRONT BRAKE DISK				BT52000GG-CGS-1	1
13	HEXAGONAL M8 CON ARANDELA	M8 HEXAGONAL SCREW WITH WASHER				T0206020	4
14	DISTANCIADOR DISCO FLOTANTE	WASHER FLOATING DISC				BT27918019	4
15	CASQUILLO INTERIOR BUJE	BUSHING				BT280418051	1
16	KIT TAPONES SILICONA VALVULA TRIAL ROJO	VALVE RED SILICONE CAP KIT				BT53500R3009	1
17	CONJUNTO LLANTA	RIM SET				BT54000CT-CGJ-1	1

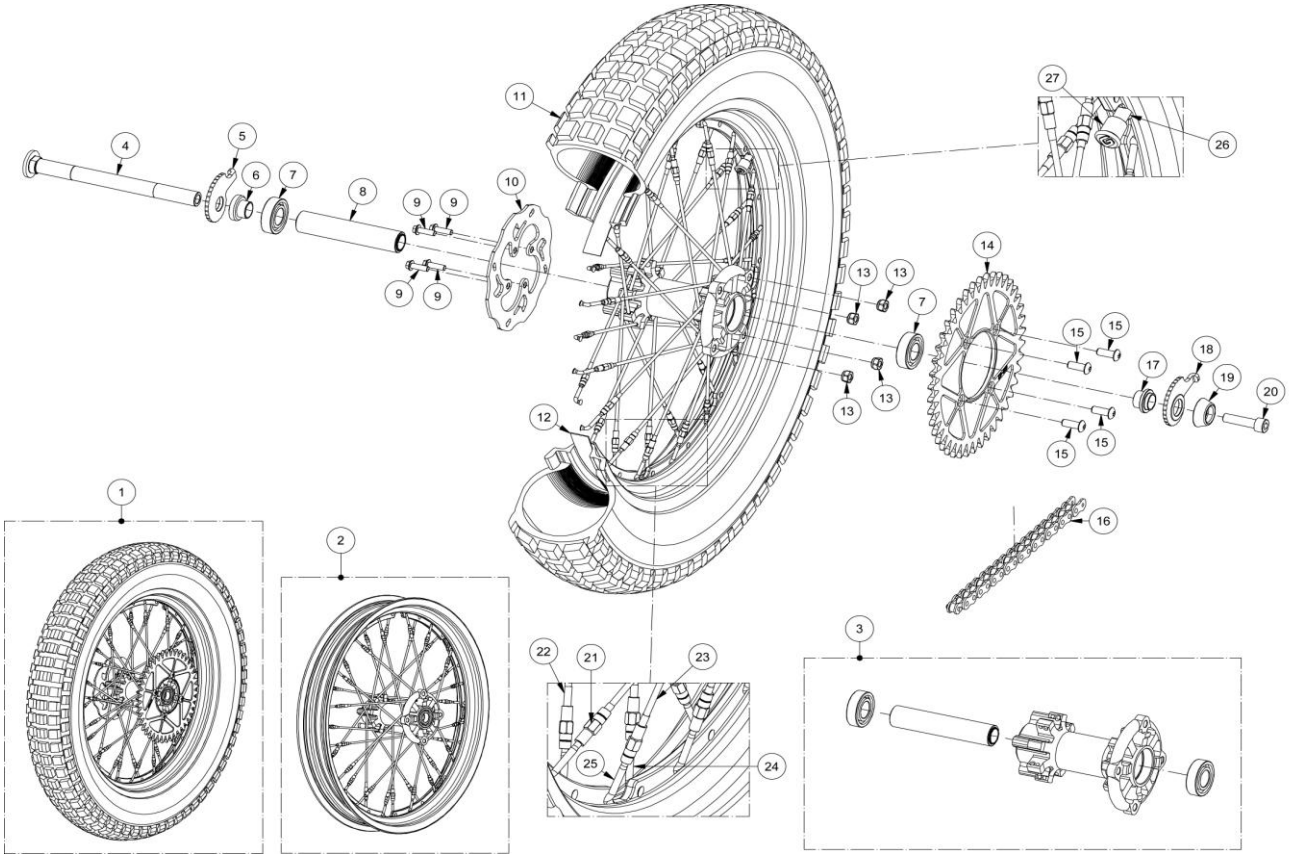
1
2
3
4
5
6
7
8
9
9
9
9
10
11
12
13
13
13
13
14
15
15
15
15
16
17
18
19
20
21
22
23
24
25
26
27

Nº	DESCRIPCION	DESCRIPTION			125	250 / 280 / 300	Cant.
1	RUEDA TRASERA TRIAL	TRIAL REAR WHEEL			BT55000CT-CJD-1	BT55000CT-CJD-1	1
2	CTO. LLANTA TRASERA RADIADA	REAR RIM KIT			BT59000CT-CJD-1	BT59000CT-CJD-1	1
3	CUBO RUEDA TRASERA	REAR WHEEL HUB			BT59100CT-CDD-1	BT59100CT-CDD-1	1
4	EJE RUEDA TRASERA	REAR WHEEL AXLE			BT580003013	BT580003013	1
5	EXCÉNTRICA TRASERA LADO DISCO	REAR SAIL CAM ADJUSTER DISC SIDE			BT581313013	BT581313013	1
6	DISTANCIADOR RUEDA TRASERA 7.5MM	REAR SPACER WHEEL			BT58100R3009	BT58100R3009	1
7	COJINETE 6004	BEARING			C160001	C160001	2
8	CASQUILLO SEPARADOR 390.80.221	BUSHING			BT280218052	BT280218052	1
9	TORNILLO 6X20	6X20 SCREW			T0206020	T0206020	4
10	DISCO FRENO TRASERO TRIAL	REAR BRAKE DISK			BT57000GG-CGS-1	BT57000GG-CGS-1	1
11	CUBIERTA TRASERA	REAR WHEEL TYRE	NOT AVAILABLE FROM GAS GAS FACTORY				1
12	FLAP LLANTA TRASERA	REAR RIM FLAP			BT551502808	BT551502808	1
13	TUERCA AUTOBLOCANTE M8 BAJA	LOW SELF-LOCK NUT			T2108001	T2108001	4
14	CORONA AUTOLIMPIEZA PROTEC FIM	REAR SPROCKET FIM PROTECTION			BT57300GG-CJG-1	BT57300GG-CJD-1	1
15	ULS TORK 8X22	8X20 ULS			T0568022	T0568022	4
16	CADENA TRIAL	TRIAL CHAIN			BT120210036	BT05000013012	1
17	DISTANCIADOR RUEDA TRAS.LADO CORONA	CROWN SIDE REAR WHEEL SPACER			BT581103013	BT581103013	1
18	EXCENTRICA TRASERA LADO CORONA				BT581353013	BT581353013	1
19	CASQUILLO TORNILLO EJE RUEDA TRASERA	REAR WHEEL AXLE CAP SCREW			BT581203013	BT581203013	1
20	TORNILLO EJE RUEDA TRASERA	REAR WHEEL AXLE BOLT			BT280718023	BT280718023	1
21	TENSOR RADIO	SPOKE NUT			BT592032809	BT592032809	32
22	RADIO DERECHO LARGO	LONGER RIGHT SPOKE			BT59201R3009	BT59201R3009	16
23	RADIO IZQUIERDO LARGO	LONGER LEFT SPOKE			BT59211R3009	BT59211R3009	16
24	RADIO DERECHO CORTO	SHORTER RIGHT SPOKE			BT59202R3009	BT59202R3009	16
25	RADIO IZQUIERDO CORTO	SHORTER LEFT SPOKE			BT59222R3009	BT59222R3009	16
26	VÁLVULA	AIR VALVE			N200110	N200110	1
27	KIT TAPONES SILICONA VALVULA	VALVE RED SILICONE CAP KIT			BT53500R3009	BT53500R3009	1

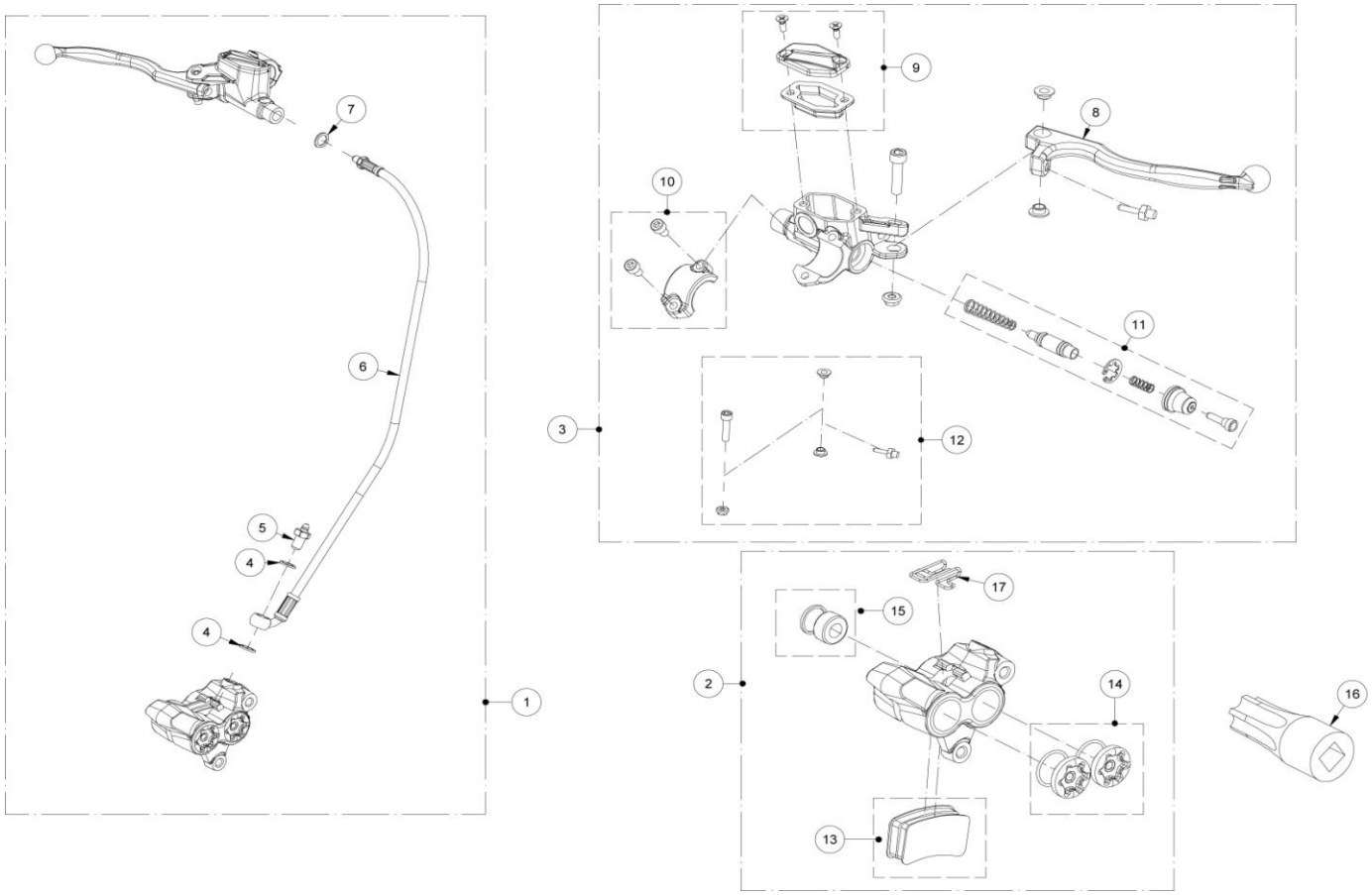
1
2
3
4
4
5
6
7
8
9
10
11
12
13
14
15
16
17

Nº	DESCRIPCION	DESCRIPTION				125 / 250 / 280 / 300	Cant.
1	CTO. FRENO DELANTERO	FRONT BRAKE SET				BT60000CT-CJD-1	1
2	PINZA FRENO DELANTERO	FRONT CALIPER				BT62000GG-CJD-1	1
3	CTO. BOMBA FRENO DELANTERO	FRONT PUMP SET				BT61000CT-CJD-1	1
4	ARANDELA PLANA COBRE 10.25X14X1.4	10.25X14X1.4 WASHER				BT280522007	2
5	SANGRADOR FRENO DELANTERO D8	HOSE SCREW				BT612002811	1
6	LATIGUILLO FRENO DELANTERO	FRONT BRAKE TUBE				BT611003013	1
7	ARANDELA (10x14x1,5)	10x14x1,5 WASHER				BT280522007	1
8	LEVA FRENO	BRAKE LEVER				BT61300R3009	1
9	KIT TAPA BOMBA	PUMP COVER KIT				BT61010CT-CJD-1	1
10	KIT BRIDA MANILLAR	HANDLEBAR CLAMP KIT				BT61350GG-CJD-1	1
11	KIT REPARACION BOMBA	PUMP REPAIR KIT				BT61405CT-CJD-1	1
12	KIT AJUSTE LEVA	ADJUST LEVER KIT				BT614003013	1
13	JUEGO PASTILLAS FRENO	BRAKE PADS KIT				BT625003013	1
14	TAPON PINZA FRENO CON TORICA	CAP AND O'RING KIT				BT62030GG-CJD-1	1
15	KIT REPARACION PINZA FRENO DEL.	FRONT BRAKE CALIPER REPAIR SET				BT620153013	1
16	LLAVE TORX T100	TORX TOOL T100				RP600013013	1
17	CLIP PASTILLA FRENO	CLIP BRAKE PADS				BT620203013	1

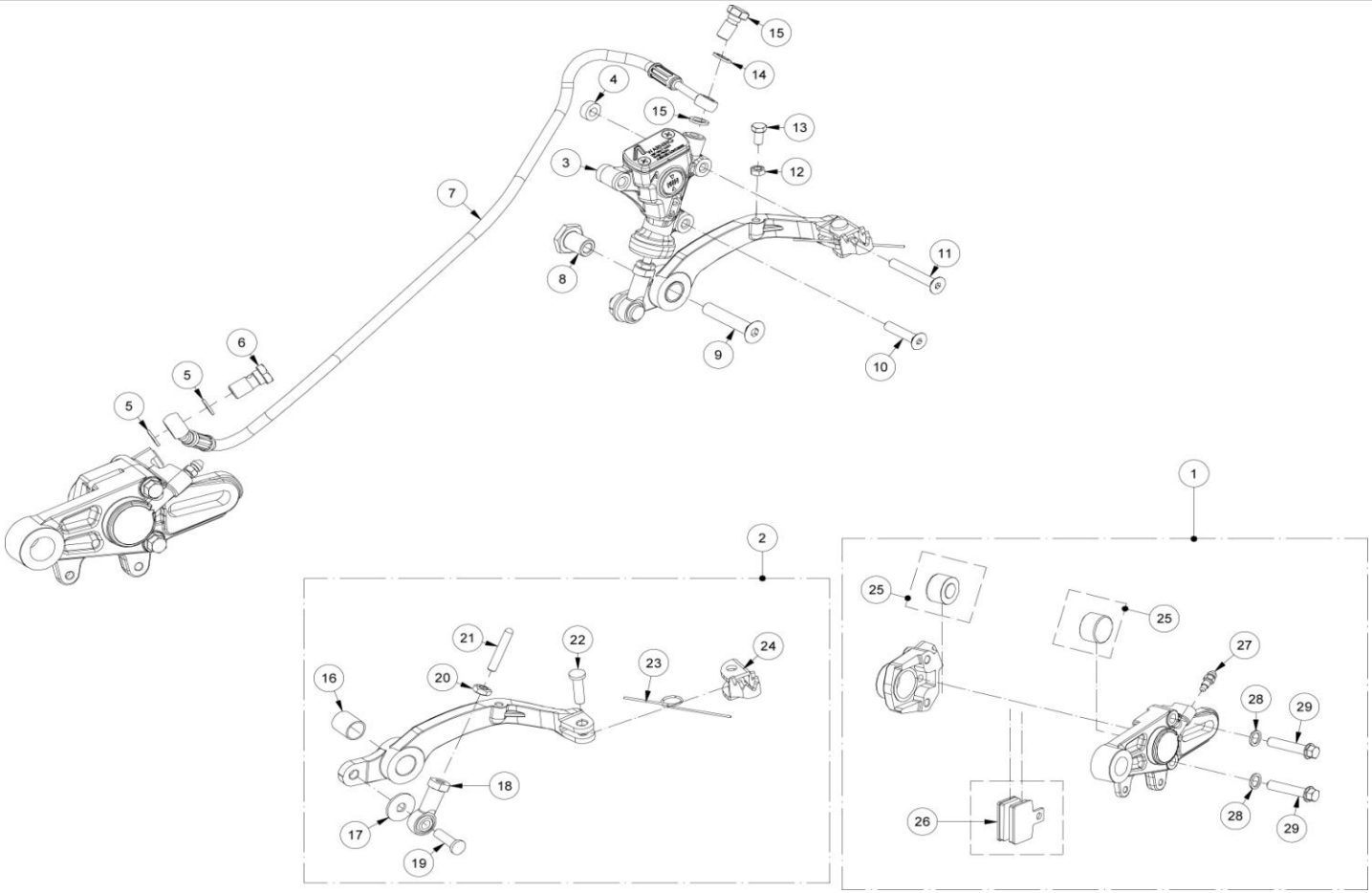
1
2
3
4
5
5
6
7
8
9
10
11
12
13
14
15
15
16
17
18
19
20
21
22
23
24
25
25
26
27
28
28
29
29

Nº	DESCRIPCION	DESCRIPTION				125 / 250 / 280 / 300	Cant.
1	PINZA FRENO TRASERA AUTOPORTANTE	REAR CALIPER AUTOSTAND				BT670013013	1
2	CONJUNTO PEDAL FRENO	BRAKE PEDAL SET				BT13000CT2809	1
3	BOMBA FRENO TRASERO	REAR PUMP BRAKE				BT660002811	1
4	SEPARADOR TERMICO BOMBA - ESCAPE	THERMAL SPACER				BT280226240	1
5	ARANDELA (10x14x1,5)	10x14x1,5 WASHER				BT280522007	2
6	RACOR LATIGUILLO FRENO TRAS (PINZA)	HOSE FITTING (CALIPER)				BT280522006	1
7	LATIGUILLO FRENO TRAS	HOSE				BT66100GG-CJD-1	1
8	CASQUILLO	BUSH				BT280610302	1
9	TORNILLO CONICO ALLEN M8X45	M8X45 ALLEN TAPERED SCREW				T0408045	1
10	TORNILLO CONICO ALLEN M6X30	M6X30 ALLEN TAPERED SCREW				T0406030I	1
11	TORNILLO CONICO ALLEN M6X43	M6X43 ALLEN TAPERED SCREW				T0406043I	1
12	CONTRATUERCA TOPE	STOPPER NUT				T2005000	1
13	TORNILLO EXAGONAL M5x10	EXAGONAL SCREW M5x10				T0105010	1
14	ARANDELA 8x12x1,5	8x12x1,5 WASHER				BT662102811	2
15	RACOR M8 LATIGUILLO FRENO TRAS (BOMBA)	M8 HOSE FITTING (PUMP)				BT662002811	1
16	CASQUILLO ANTIFRICCION	ANTIFRICTION BUSH				C200101	1
17	ARANDELA	WASHER				T40060120	1
18	ROTULA PEDAL FRENO	BALL JOINT BRAKE PEDAL				BT280222053	1
19	EJE	AXLE				BE25622018	1
20	TUERCA VARILLA FRENO	BRAKE ROD NUT				T2006001	1
21	VARILLA FRENO TRASERO	REAR BRAKE ROD				BT280222062	1
22	REMACHE PUNTERA FRENO	BRAKE RIVET TOE				BE25922018	1
23	MUELLE PUNTERA FRENO	BRAKE SPRING TOE				ME25636029	1
24	PUNERA PEDAL FRENO TRAS RETRACTIL	BRAKE PEDAL TOE				BT27922017	1
25	KIT REPARA PISTON PINZA TRIAL TRAS AUTOPORTANTE	REPAIR KIT AUTOSTAND				BT67560GG-BZJ-1	2
26	JUEGO PASTILLAS FRENO TRASERO (ROJAS GALFER)	REAR BRAKE PADS SET				BT280222068	1
27	SANGRADOR	BLEEDER				BE25622060	1
28	ARANDELA 10x14x1,5	10x14x1,5 WASHER				BT280422007	2
29	TORNILLO PINZA DE FRENO	REAR CALIPER SCREW				R320000	2
30	GOMA SILENTBLOCK	SILENTBLOCK RUBBER				BE250026005	1
31	CASQUILLO ALUMINIO TOPE CABALLETE	ALUMINIUM BUSH				BT14225GG-CGS-1	1
32	TORNILLO ALLEN M5x25	ALLEN SCREW M5x25				T0305025	1

Conjunto pedal arranque / Kickstar set Rear

GASGAS

TXT RACING2017 E4

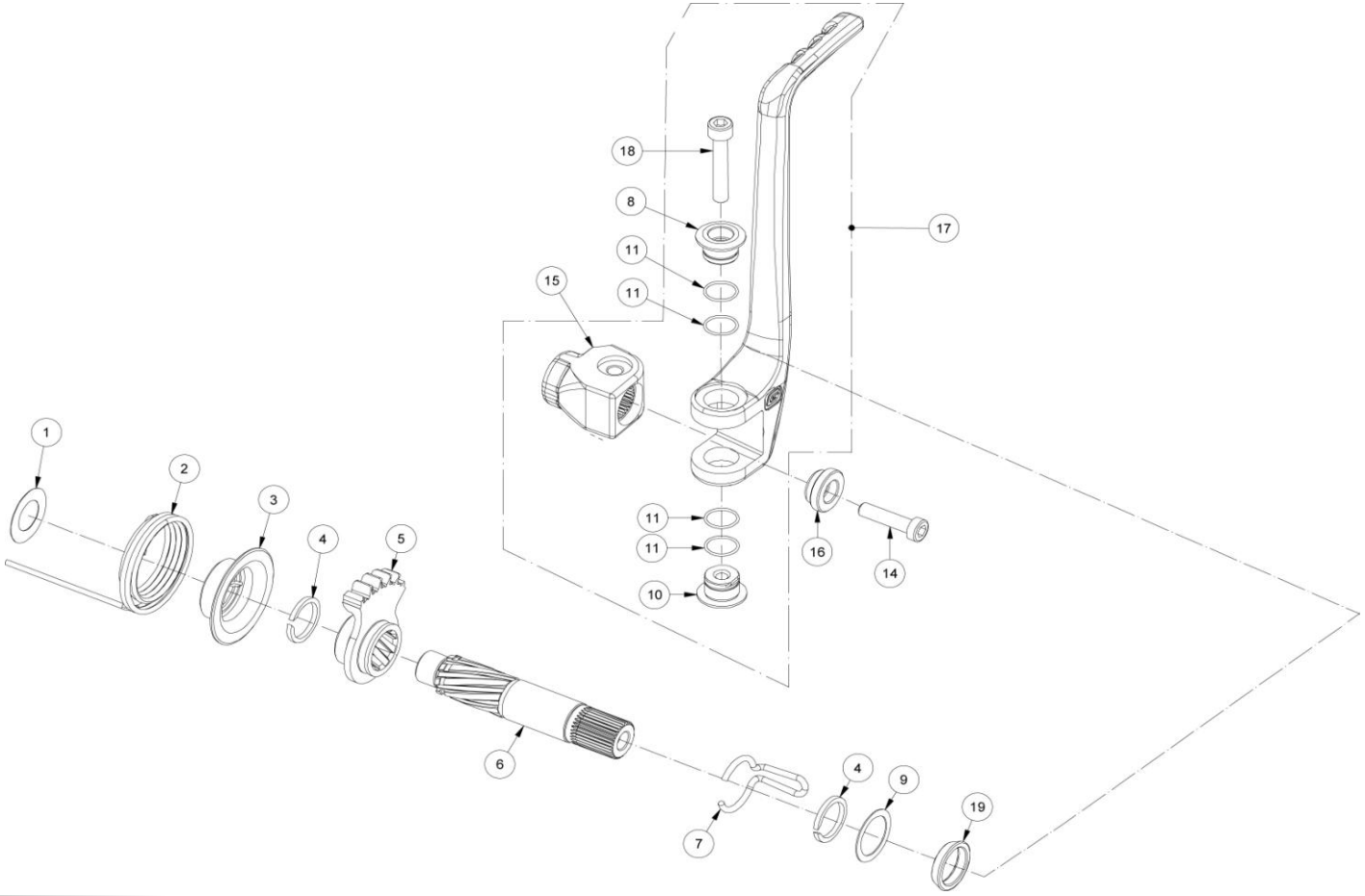

Nº	DESCRIPCION	DESCRIPTION				125 / 250 / 280 / 300	Cant.
1	ARANDELA 14X25X0,5 / 14X25X0,5 WASHER	14X25X0,5 WASHER				T4001425	1
2	MUELLE ARRANQUE TRIAL	PEDAL KICKSTART SPRING				MT280226007	1
3	CENTRADOR MUELLE ARRANQUE	KICKSTART SPRING BUSHING				MT280226053	1
4	CIRCLIP EJE 18 MM	AXIS CIRCLIP				MT280226017	2
5	PIÑÓN ARRANQUE TRIAL 2002	KICKSTART GEAR				MT280226002	1
6	EJE ARRANQUE TRIAL	KICKSTARTER SHAFT				MT890102811	1
7	MUELLE FRICCIÓN ARRANQUE	FRICTION KICKSTART SPRING				MT280226006	1
8	CASQUILLO PEDAL ARRANQUE	KICKSTART PEDAL BUSHING				MT280226066	1
9	ARANDELA 18,2X24X0,5	18,2X24X0,5 WASHER				T4001824	1
10	TUERCA PEDAL ARRANQUE	KICKSTART PEDAL NUT				MT89025GG-CBN-1	1
11	TÓRICA NBR 12X1	NBR O'RING				MT280226063	4
12	BOLA MUÑEQUILLA PEDAL	KICKSTART PEDAL BALL				ME250036062	1
13	MUELLE MUÑEQUILLA PEDAL	KICKSTART PEDAL SPRING				ME250036066	1
14	TORNILLO UFK M6X25	M6X25 UFK SCREW				T0316025	1
15	MUÑEQUILLA PEDAL ARRANQUE	KICKSTART PEDAL BASE				MT89015GG-CBN-1	1
16	CASQUILLO SUJECIÓN PEDAL	KICKSTART PEDAL BUSHING				MT280226068	1
17	CTO. PEDAL ARRANQUE	KICKSTART PEDAL KIT				MT89000CT-CBN-1	1
18	ALLEN M6X35	M6X35 ALLEN BOLT				T0306035	1
19	CASQUILLO POSICIONADOR PEDAL EN EJE DE ARRANQUE	POSITIONING BUSH				MT86500GG-CBN-1	1

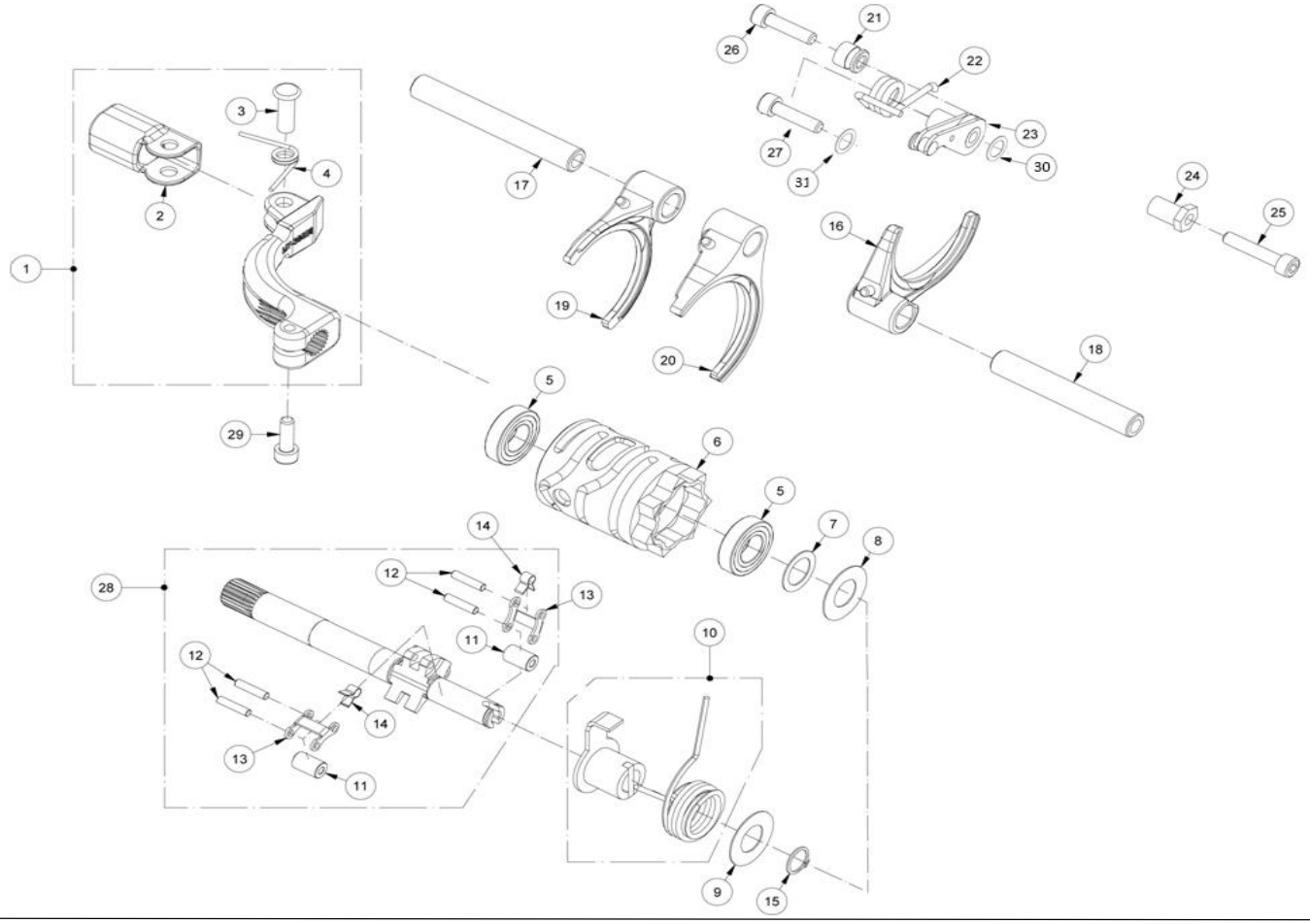
1
2
3
4
5
6
7
8
9
10
11
12
13
14
15
16
17
18
19
20
21
22
23
24
25
26
27
28
29
30
31

Nº	DESCRIPCION	DESCRIPTION				125 / 250 / 280 / 300	Cant.
1	CTO. PEDAL CAMBIO	GEAR PEDAL KIT				MT280238026	1
2	PUNTERA PEDAL CAMBIO	GEAR PEDAL END				ME25636027	1
3	REMACHE PUNTERA CAMBIO	RIVOT PEDAL END				ME25636030	1
4	MUELLE PUNTERA PEDAL CAMBIO	PEDAL END SPRING				M121000	1
5	COJINETE 12X24X6 2Z DESMO	12X24X6 2Z DESMO BEARING				MT280238032	2
6	DESMODRÓMICO	SHIFT DRUM				MT280238031	1
7	ARANDELA 12,2X18X0,5	12,2X18X0,5 WASHER				T4001218	1
8	ARANDELA 12,2X24X0,5	12,2X24X0,5 WASHER				T4001224	1
9	ARANDELA 10,2X24X0,5	10,2X24X0,5 WASHER				T4011024	2
10	POSICIONADOR Y MUELLE EJE SELECTOR	SHIFT SHAFT CENTER LOCATOR AND SPRING				MT280238037CT	1
11	RODILLO TRINQUETE SELECTOR	RATCHET ROLLER				MT280238040	2
12	AGUJA 3X13,8	3X13,8 NEEDLE				MT280238048	4
13	TRINQUETE SELECTOR	RATCHET ARM SELECTOR				MT280238036	2
14	MUELLE TRINQUETE SELECTOR	RATCHET SEL. SPRING				MT280238039	2
15	CIRCLIP E10 EJE	E10 SHAFT CIRCLIP				M03314011	1
16	HORQUILLA PRIMARIA	SHIFT FORK PRIMARY				MT280238009	1
17	EJE HORQUILLA LARGO	LONG FORK SHAFT				MT280238044	1
18	EJE HORQUILLA CORTO	SHORT FORK SHAFT				MT280238045	1
19	HORQUILLA 2-4-5-6	2-4-5-6 FORK				MT280238007	1
20	HORQUILLA 1-3	1-3 FORK				MT280238008	1
21	TOPE MUELLE FIJADOR	SPRING REST POST				MT280238049	1
22	MUELLE FIJADOR MARCHAS	GEAR SELECTOR SPRING				MT280238034	1
23	FIJADOR MARCHAS	GEAR SELECTOR ARM AND ROLLER				MT280238033	1
24	TOPE MUELLE EJE SELECTOR	SELECTOR SPRING TOP SHAFT				MT280238050	1
25	ALLEN 5X25 DACROMET	5X25 DACROMET ALLEN BOLT				T0305025	1
26	ALLEN 5X20	5X20 ALLEN				T0305020	1
27	HEXAGONAL M5x30 CON ARANDELA	HEXAGONAL BOLT M5x30 WITH WASHER				T0305030	1
28	CONJUNTO EJE SELCTOR	SHIFT SHAFT SET				MT280238043	1
29	ALLEN M5x20	M5x20 ALLEN				T0305020	1
30	ARANDELA 16x6x1	16x6x1 WASHER				T4001605	1
31	ARANDELA 5x15x1,5	5x15x1,5 WASHER				T4005015	1

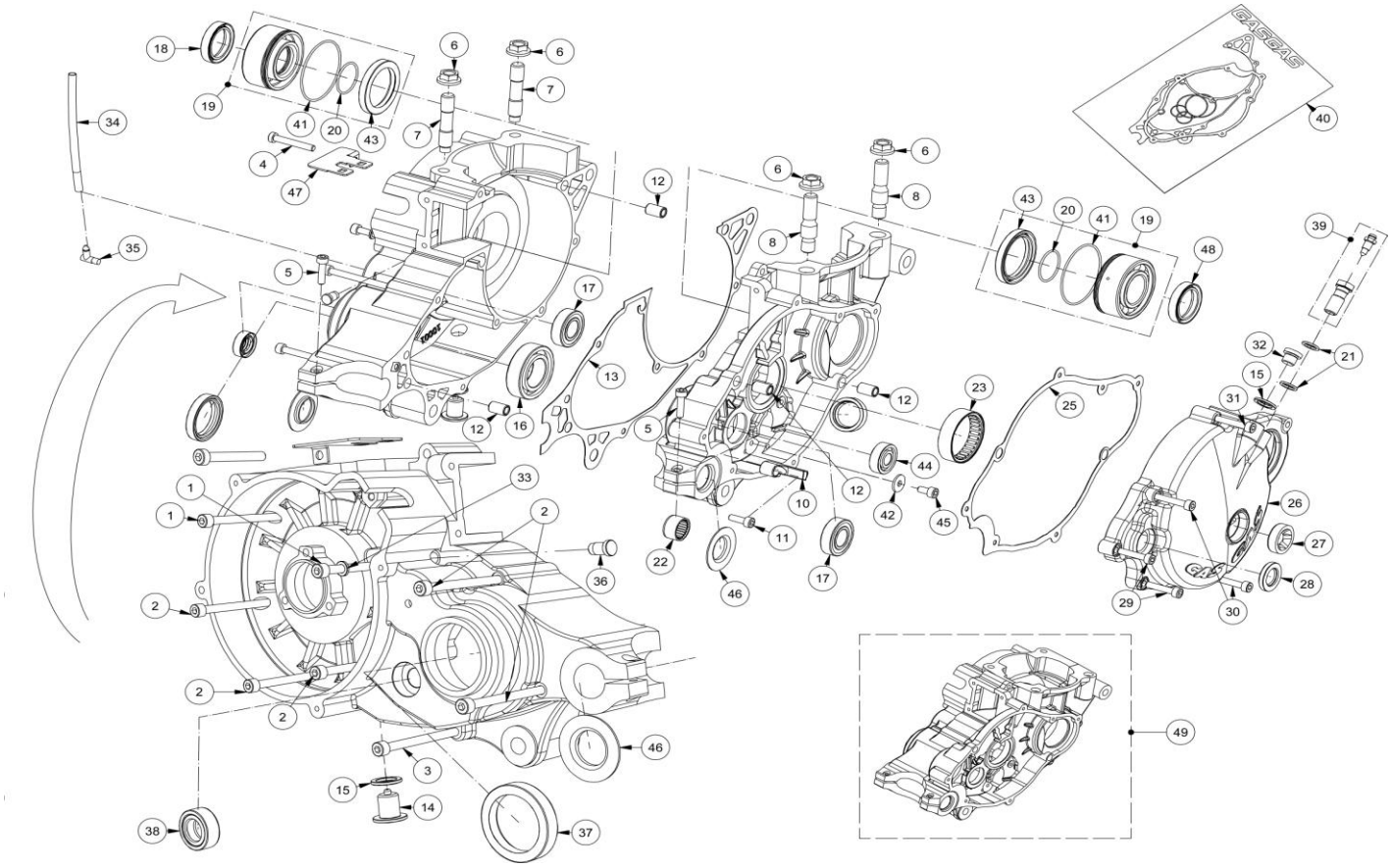
18
19
41
20
43
6
7
34
4
47
35
5
17
13
12
16
33
1
2
36
22
46
10
11
8
44
42
45
23
25
39
32
21
15
31
26
27
28
29
30
3
14
37
38
40
49

Nº	DESCRIPCION	DESCRIPTION			125	250 / 280 / 300	Cant.
1	ALLEN 5X65 DACROMET	5X65 DACROMET ALLEN BOLT			T0305065	T0305065	2
2	ALLEN 5X55 DACROMET	5X55 DACROMET ALLEN BOLT			T0305055	T0305055	5
3	ALLEN 5X75 DACROMET	5X75 DACROMET ALLEN BOLT			T0305075	T0305075	1
4	ALLEN 5X35 DACROMET	5X35 DACROMET ALLEN BOLT			T0305035	T0305035	1
5	ALLEN 5X20 DACROMET	5X20 DACROMET ALLEN BOLT			T0305020	T0305020	2
6	TUERCA CILINDRO 8.8 ESP	CYLINDER NUT			M01613001	M01613001	4
7	ESPÁRRAGO CILINDRO	BASE STUD CYLINDER LEFT			MT280216023	MT280216023	2
8	ESPÁRRAGO CON CENTRAJE	BASE STUD CYLINDER RIGHT			MT280216056	MT280216056	2
10	TOPE ARRANQUE TRIAL	STOP KICKSTART PEDAL			MT280226011	MT280226011	1
11	ALLEN 5X15 DACROMET	5X15 DACROMET ALLEN BOLT			T0305015	T0305015	1
12	CASQUILLO CENTRADOR CÁRTER 6X9X14	CRANKCASE BUSHING			M01017000	M01017000	4
13	JUNTA CÁRTER CENTRAL 0.2 MM	CENTER CRANKCASE GASKET			MT280344001	MT280344001	1
14	TAPÓN VACIADO ACEITE CON IMÁN	MAGNETIC OIL DRAIN PLUG			ME25610017	ME25610017	2
15	ARANDELA TIPO BUJÍA 12X18X2	WASHER			MT280410030	MT280410030	2
16	COJINETE 25X47X12 / 25X47X12	BEARING			MT280236159	MT280236159	1
17	COJINETE 15X32X9 6002 2RSL CAMBIO	GEAR BEARING			MT280236160	MT280236160	2
18	RETÉN 25X35X7 TEFLÓN CIGUEÑAL IZQUIERDO	OIL SEAL CRANK SHAFT			MT280212009	MT280212009	1
19	COJINETE CIGUEÑAL ST5225	ST5225 CRANKSHAFT BEARING			MT31010GG-CHA-1	MT31000GG-CJD-1	2
20	TÓRICA 25X1.5 NBR	O'RING 25X1.5 NBR			MT280212025	MT280212025	2
21	ARANDELA AM 10X14X1.5	10X14X1.5 WASHER			T4011014	T4011014	2
22	COJINETE BK1412 ARRANQUE TRIAL	KICKSTART BEARING			MT280226067	MT280226067	1
23	COJINETE 35X45X12 NQ (EJE PRIMARIO)	35X45X12 BEARING			MT280236158	MT280236158	1
25	JUNTA TAPA EMBRAGUE	CLUTCH COVER GASKET			MT280244002	MT280244002	1
26	TAPA EMBRAGUE MG TRIAL	CLUTCH COVER			MT65000CT-CHA-1	MT65000CT-CBN-1	1
27	VISOR NIVEL ACEITE EC400-4T	OIL LEVEL SIGHT GLASS			MFS400110015	MFS400110015	1
28	RETÉN 18-24-4 TRIAL 2002	18-24-4 4 KICKSTART SHAFT SEAL			MT280226016	MT280226016	1
29	ALLEN 5X25 DACROMET	5X25 DACROMET ALLEN BOLT			T0305025	T0305025	2
30	ALLEN 5X30 DACROMET	5X30 DACROMET ALLEN BOLT			T0305030	T0305030	2
31	ALLEN 5X40 DACROMET	5X40 DACROMET ALLEN BOLT			T0305040	T0305040	1
32	TAPÓN LLENADO ACEITE	OIL FILL PLUG			M01016002	M01016002	1
33	ARANDELA 5X9X1,5 COBRE	5X9X1,5 WASHER			T4000509	T4000509	1

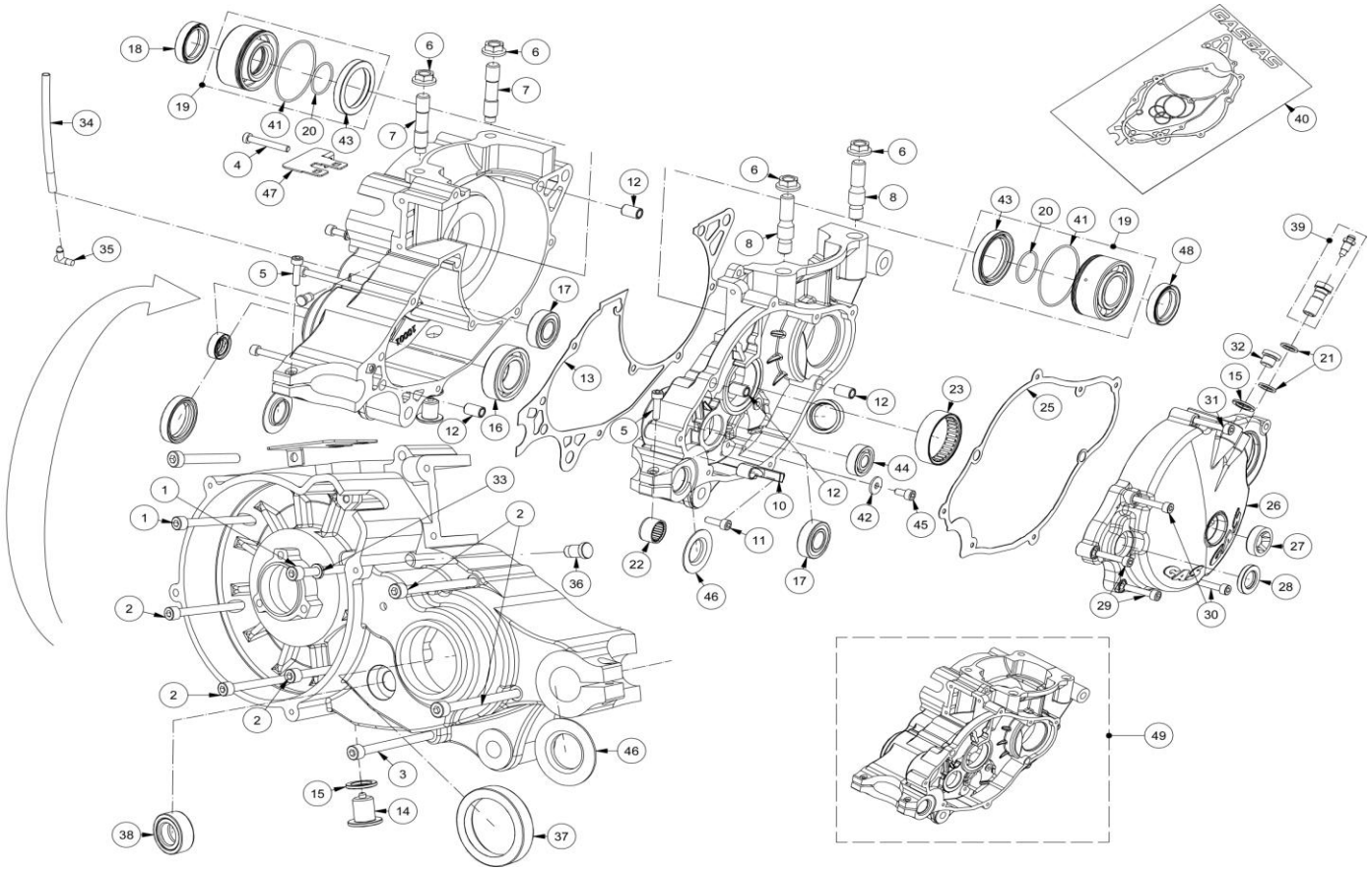
18
19
41
20
43
6
7
34
4
47
35
5
17
13
12
16
1
33
2
36
22
46
3
15
14
38
37
8
10
11
42
45
23
44
25
39
32
21
31
26
27
28
29
30
40
48
49

Nº	DESCRIPCION	DESCRIPTION			125	250 / 280 / 300	Cant.
34	TUBO DESVAPORIZADOR	FUEL VENT HOSE			MT280210012	MT280210012	1
35	DESVAPORIZADOR	FUEL VENT			MIT50010012	MIT50010012	1
36	TAPÓN PASO ACEITE CÁRTER	OIL CARTER PLUG			MT280210021	MT280210021	1
37	RETÉN 30X40X7	30X40X7 SEAL			ME25636024	ME25636024	1
38	RETÉN EJE SELECTOR	RETÉN EJE SELECTOR / AXLE SEAL			MT280236048	MT280236048	1
39	RACORD PINZA EMBRAGUE HIDRÁULICO	HIDRAULIC CLUTCH RACORD			BT280522106	BT280522106	1
40	KIT JUNTAS	GASKET SET			MT280244100	MT280244100	1
41	TÓRICA COJINETE CIGU. 49X1.5 NBR	O'RING 49X1.5 NBR			----	MT280512028	2
42	ARANDELA PLANA 5x15x1,5	5x15x1,5 WASHER			T4005015	T4005015	1
43	RETEN CIGÜEÑAL	CRANK SHAFT SEAL			----	MT280412006/1	2
44	RODA.EJE CENTRI.Y BOMBA 608.Z.C3	BEARING 608.Z.C3			ME25610010	ME25610010	1
45	ALLEN 5x12	5x12 ALLEN SCREW			T0305012	T0305012	1
46	ARANDELA BASCULANTE	SWINARM WASHER			BT280212007	BT280212007	2
47	SOPORTE CONECTORES ENCENDIDO	SUPPORT IGNITION CONNECTORS			ET75050GG-CBN-1	ET75050GG-CBN-1	1
48	RETEN CIGÜEÑAL	CRANK SHAFT SEAL			MT31020GG-CHA-1	----	1
49	KIT CARTERS	CRANKCASES SET			MT10000CT-CHA-1	MT10000CT-CBN-1	1

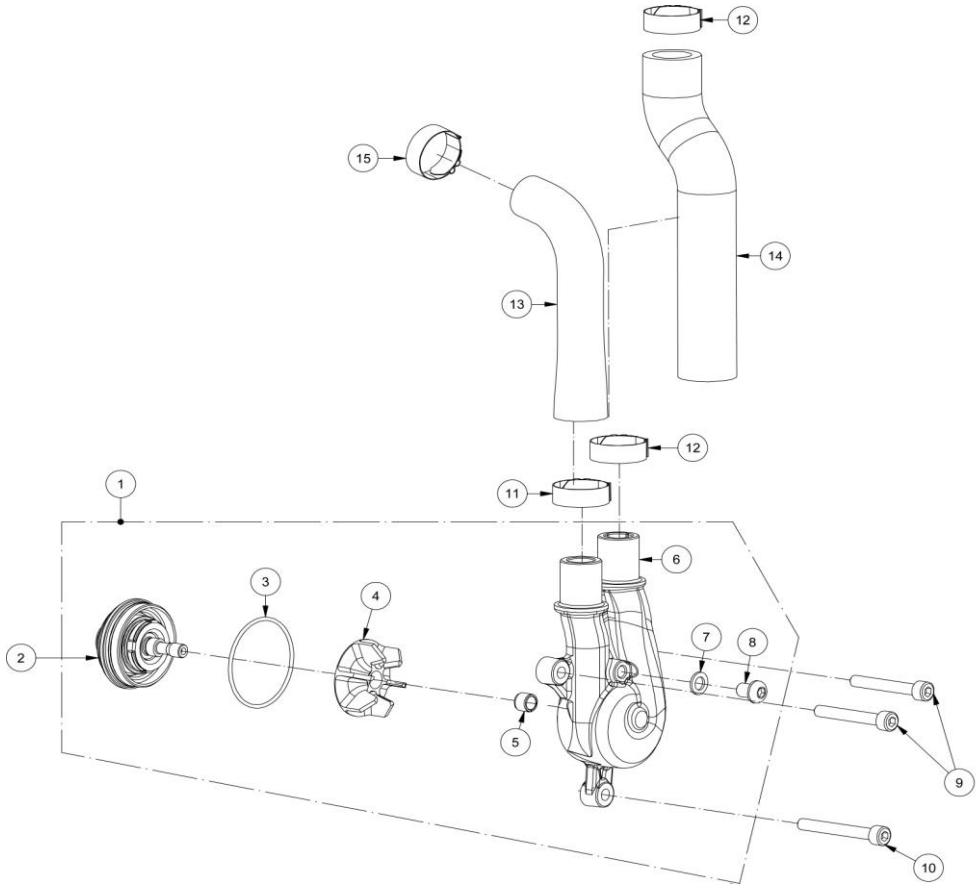
12
15
14
13
12
11
1
6
3
4
2
7
8
5
9
10

Nº	DESCRIPCION	DESCRIPTION			125	250 / 280 / 300	Cant.
1	CONJUNTO BOMBA DE AGUA	WATER PUMP KIT			MT55000CT-CGI-1	MT55000CT-CGI-1	1
2	CTO. INTERIOR BOMBA DE AGUA	WATER PUMP INNER ASSY			MT57000CT-CGI-1	MT57000CT-CGI-1	1
3	TÓRICA 37X1.5 TAPA BOMBA AGUA	O'RING WATER PUMP COVER			MT280218008	MT280218008	1
4	TURBINA BOMBA DE AGUA	WATER PUMP TURBINE			MT56000GG-CGI-1	MT56000GG-CGI-1	1
5	RODAMIENTO DE FRICCION Ø6 x Ø8 x 6	FRICTION BEARING Ø6 x Ø8 x 6			MT57035GG-CGI-1	MT57035GG-CGI-1	1
6	BOMBA DE AGUA CUERPO SUPERIOR	WATER PUMP UPPER BODY			MT55000GG-CGI-1	MT55000GG-CGI-1	1
7	ARANDELA Ø6 x Ø10 x 1,5	WASHER Ø6 x Ø10 x 1,5			T4006008	T4006008	1
8	TORNILLO ULS M6x8	BOLT ULS M6x8			T0506008i	T0506008i	1
9	ALLEN M5x35 GEOMET	M5x35 ALLEN SCREW GEOMET			T0305035	T0305035	2
10	TORNILLO ALLEN M5x40 GEOMET	ALLEN SCREW M5x40 GEOMET			T0305040	T0305040	1
11	ABRAZADERA 20	CLAMP Ø20			L200035	L200035	1
12	ABRAZADERA COBRA 21	Ø21 COBRA CLAMP			L200046	L200046	2
13	TUBO BOMBA – CILINDRO	PUMP TO CILINDER PIPE			BT280232017	BT280232017	1
14	MANGUITO INFERIOR (RADIADOR --> BOMBA)	LOWER PIPE (RADIATOR-PUMP)			BT71000GG-CGI-1	BT71000GG-CGI-1	1
15	ABRAZADERA COBRA 19	COBRA CLAMP Ø19			L200043	L200043	1

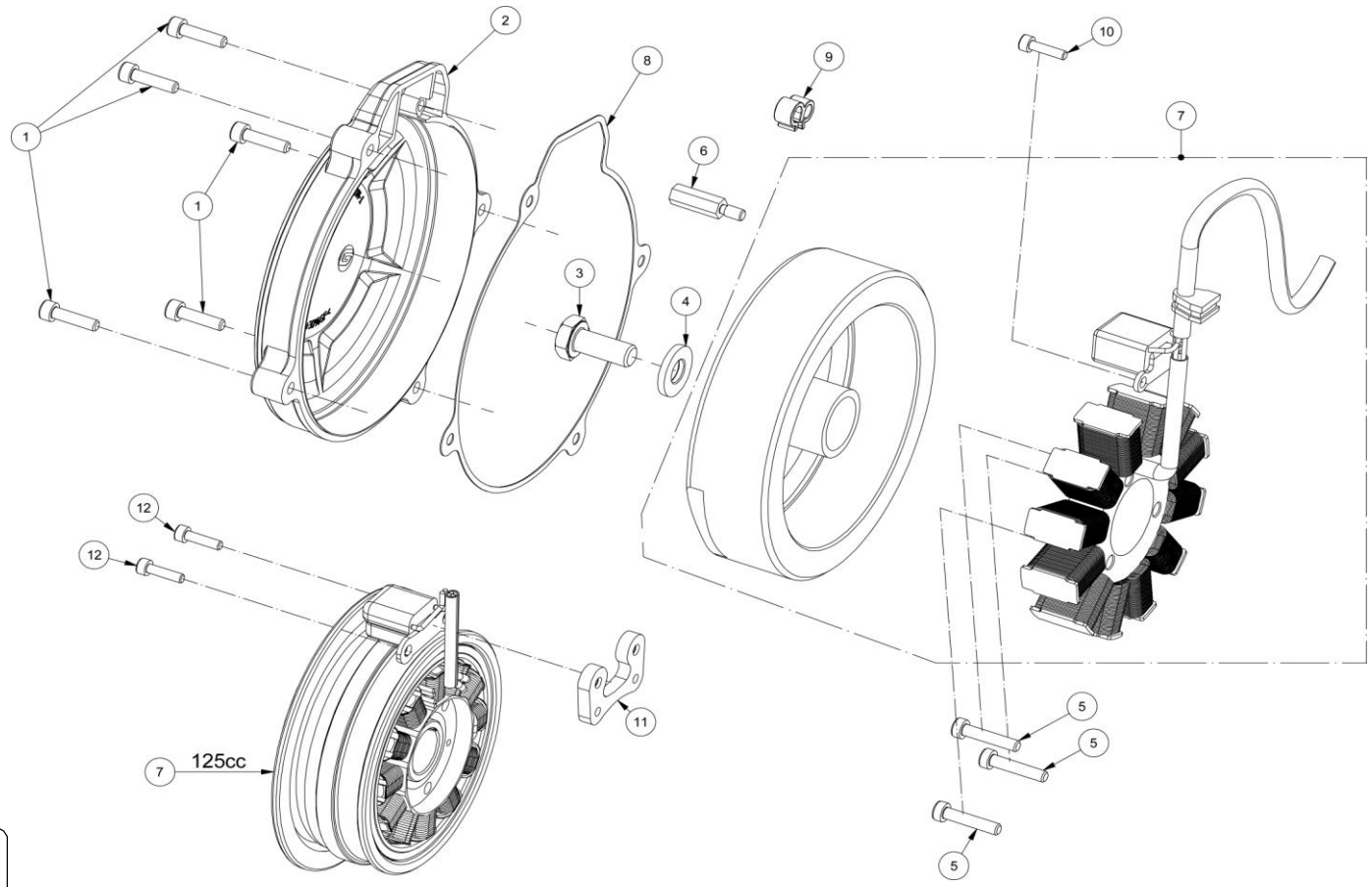
1
1
2
3
4
5
5
5
6
7
7
8
9
10
11
12
12
125cc

Nº	DESCRIPCION	DESCRIPTION			125	250 / 280 / 300	Cant.
1	ALLEN 5X20	5X20 ALLEN BOLT			T0305020N	T0305020N	5
2	TAPA ENCENDIDO	COVER FLY-WHEEL			MT60000GG-CBN-1	MT60000GG-CBN-1	1
3	TORNILLO M10x25	M10x25 SCREW			T02010025	T02010025	1
5	ALLEN UFK NEGRO 5X25	UFK 5X25 BLACK ALLEN BOLT			T130502513602	T130502513602	3
6	TORNILLO PICK UP TRIAL 2003	PICK UP TRIAL 2003 SCREW			ET70220GG-CBN-1	ET70220GG-CBN-1	1
7	CTO. ENCENDIDO	IGNITION SET			ET70000CT-CGC-1	ET70000CT-CGI-1	1
8	JUNTA TAPA VOLANTE ENCENDIDO	COVER FLY WHEEL GASKET			MT280344004	MT280344004	1
9	GRAPA SUJECCION CABLE	GRAPA SUJECCION CABLE			EE650202508	EE650202508	1
10	TORNILLO ALLEN	ALLEN SCREW			T0305012	T0305012	1
11	SOPORTE PICKUP HIDRIA (80 - 125)	PICK UP SUPPORT (HIDRIA 80-125)			MT70215GG-CGC-1	-----	1
12	TORNILLO ALLEN	ALLEN SCREW			T0305012	-------	2
13	ARANDELA 5x10x1	WASHER 5X10X1			T4005010	T4005010	3

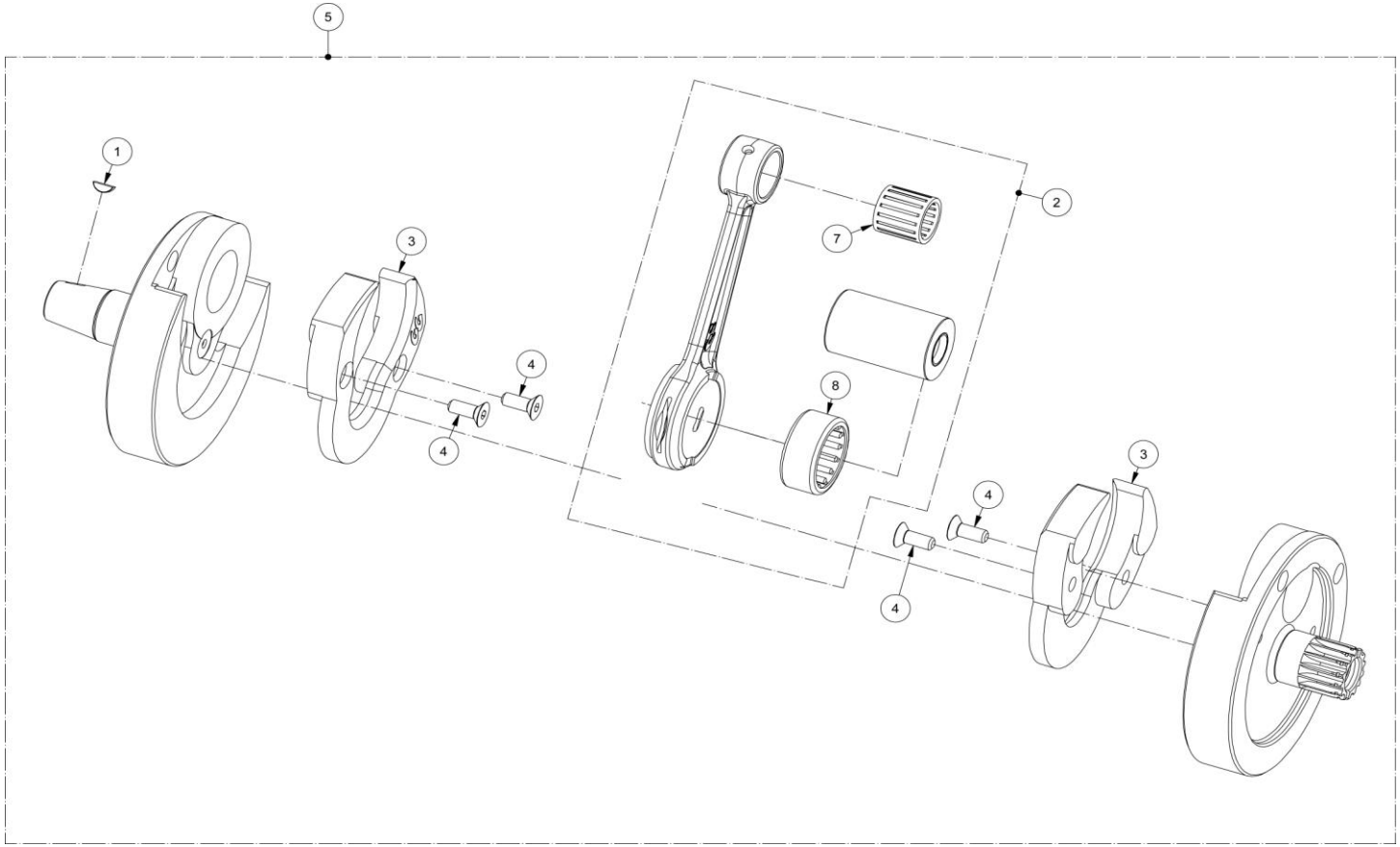
5
1
3
4
4
2
7
8
3
4
4

Nº	DESCRIPCION	DESCRIPTION			125	250 / 280 / 300	Cant.
1	CHAVETA D10X3X3.7 TRIAL 2002	D10X3X3.7 KEY			MT280234016	MT280234016	1
2	CONJUNTO BIELA TRIAL	TRIAL CONNECTING ROD SET			MT32000CT-CHA-1	MT280212100	1
3	NYLON CONTRAPESO	CONTERWEIGHT NYLON			MT37000GG-CHA-1	MT280212021	2
4	ALLEN CÓNICO UN15933 M6X16	ALLEN BOLT			T0406016	T0406016	4
5	CTO. CIGÜEÑAL TRIAL SXXI	CRANK SHAFT ASSEMBLY COMPLETE			MT30000CT-CHA-1	MT280212000	1
7	COJINETE PIE DE BIELA	NEEDLES BEARING			M01411001	ME25616035	1
8	COJINETE CABEZA DE BIELA	NEEDLES BEARING			M01415001	MT32050GG- AIZ -1	1

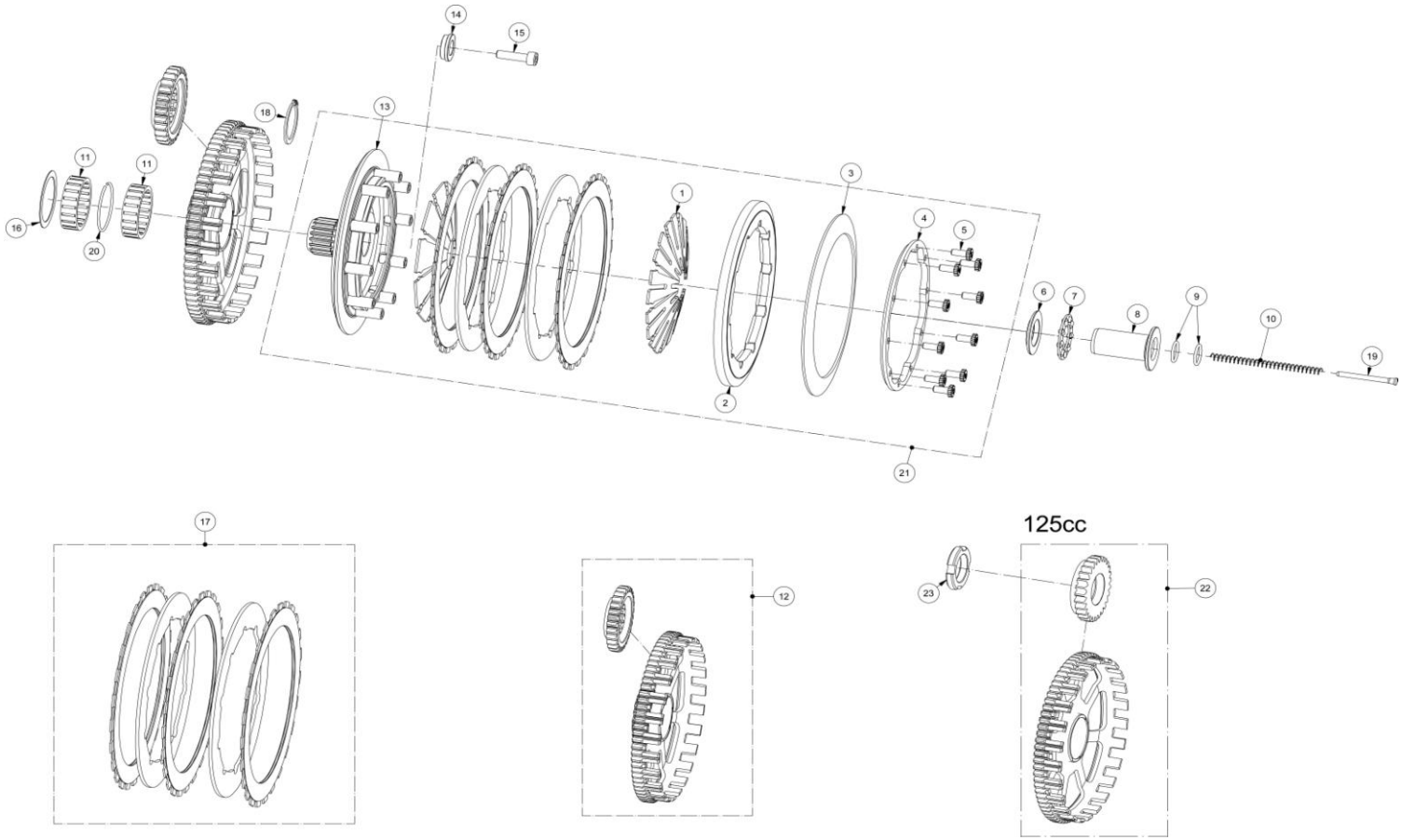
125cc

Nº	DESCRIPCION	DESCRIPTION			125	250 / 280 / 300	Cant.
1	DESMULTIPLICADOR EMBRAGUE TRIAL	CLUTCH RELEASE ARM			MT280632070	MT280632070	10
2	PRENSA EMBRAGUE	PRESSURE PLATE			MT280632006	MT280632006	1
3	MUELLE EMBRAGUE TRIAL	CLUTCH SPRING			MT22020GG-CJT-1	MT22020GG-CJT-1	1
4	SOPORTE MUELLE EMBRAGUE	CLUTCH SPRING SUPPORT PLATE			MT120632045	MT280632045	1
5	ULS ESPECIAL PRENSA 4X10	PRESSURE PLATE ULS BOLT			MT280332077	MT280332077	10
6	BOLET EMBRAGUE TRIAL 2003	BEARING PLATE			MT280332014	MT280332014	1
7	COJINETE PRENSA EMBRAGUE AXK 17X30X2	BEARING, CLUTCH END PLATE			MT280232043	MT280232043	1
8	PISTÓN BOMBIN EMBRAGUE TRIAL 2003	CLUTCH PUMP PISTON			MT280332040	MT280332040	1
9	TÓRICA FKM	FKM O'RING			MT280432047	MT280432047	2
10	MUELLE PISTÓN EMBRAGUE	CLUTCH PISTON SPRING			MT280332018	MT280332018	1
11	COJINETE G95 CORONA EMBRAGUE	CLUTCH BEARING			MT280432039	MT280432039	2
12	CTO. CORONA EMBRAGUE Y PIÑON	CROWN CLUTCH AND GEAR SET			-----	MT280232003CT	1
13	CUBO EMBRAGUE	CLUTCH HUB			MT280632005CT	MT280632005CT	1
14	CASQUILLO SUJECIÓN EMBRAGUE	CLUTCH HUB BUSHING			MT280232080	MT280232080	1
15	ALLEN UFK 5X20 SUJECIÓN CUBO TRIAL 280	CLUTCH HUB BOLT			MT280232081	MT280232081	1
16	ARANDELA 30.2X38X0.5 EMBRAGUE	CLUTCH WASHER			T4003038	T4003038	1
17	CTO. DISCOS EMBRAGUE TRIAL 2004	2004 CLUTCH DISC SET COMPLETE			MT280432055	MT280432055	1
18	CIRCLIP E25 CIGÜEÑAL	CRANKSHAFT E25 CIRCLIP			ME25936084	ME25936084	1
19	GUÍA MUELLE PISTÓN	PISTON SPRING GUIDE			MT280432065	MT280432065	1
20	CIRCLIP CORONA EMBRAGUE	CLUTCH CIRCLIP			MT280432139	MT280432139	1
21	CTO. EMBRAGUE TRIAL PRO	CLUTCH SET			MT20000CT-CKA-1	MT20000CT-CKA-1	1
22	CTO. CORONA EMBRAGUE Y PIÑON	CROWN CLUTCH AND GEAR SET			MT21000CT-CHA-1	-------	1
23	TUERCA FIJA PIÑON	GEAR NUT			MT42095GG-CHA-1	--------	1

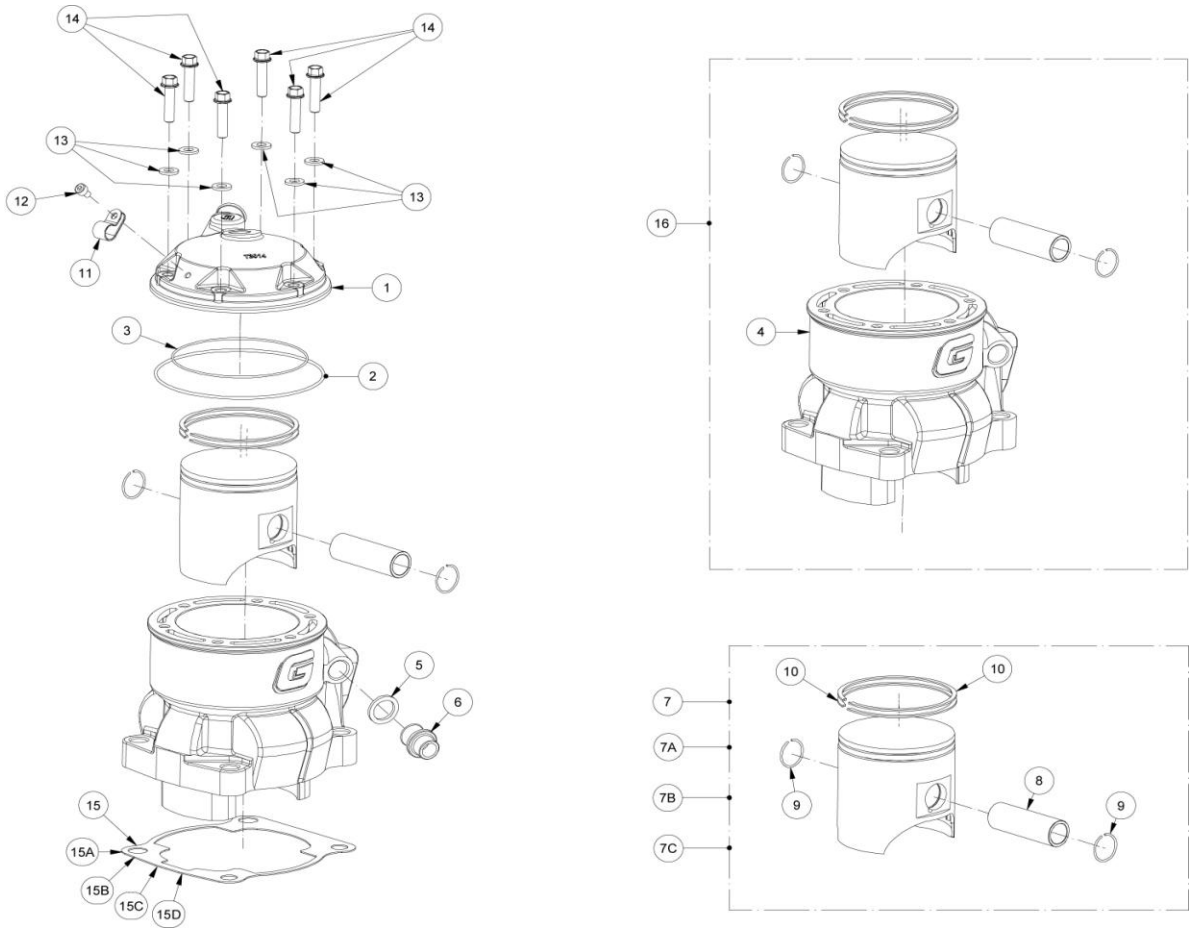
14
14
13
13
12
11
1
3
2
5
6
15
15A
15B
15C
15D
16
4
7
7A
7B
7C
10
10
9
8
9

Nº	DESCRIPCION	DESCRIPTION	125	250	280	300	Cant.
1	CTO.CULATA NEGRA TRIAL RACING 300 2017E4	BLACK CYLINDER HEAD	MT75000CT-CJY-1	MT75000CT-CJW-1	MT75000CT-CJV-1	MT75000CT-CJT-1	1
2	TÓRICA CULATA EXTERIOR	O'RING CYL. EXTERIOR	ME120116060	M01619135	M01619135	M01619135	1
3	TÓRICA CULATA INTERIOR	O'RING CYL. INTERIOR	ME120116065	M01619215	M01619215	M01619215	1
4	CILINDRO TRIAL	CYLINDER	MT70000GG-CGC-1	MT70000GG-CGF-1	MT70000GG-CGH-1	MT70000GG-CGJ-1	1
5	ARANDELA PLANA FIBRA	FIBER WASHER	ME25610014	ME25610014	ME25610014	ME25610014	1
6	RACORD CILINDRO	CYLINDER WATER HOSE NECK	MT280210013	MT280210013	MT280210013	MT280210013	1
7	PISTÓN TRIAL	PISTON TRIAL	MT120216020	MT250516020	MT71000CT2808	MT710003010	1
7A	PISTÓN LETRA B	PISTON B	MT120216121	MT250516121	MT71001CT2808	MT710013010	1
7B	PISTÓN LETRA C	PISTON C	MT120216122	MT250216122	MT280216122	MT300316122	1
7C	PISTÓN LETRA D	PISTON D	MT120216123	MT250216123	MT280216123	MT300316123	1
8	BULÓN PISTÓN	PISTON PIN	MT120216125	MT280216125	MT280216125	MT280216125	1
9	CIRCLIP PISTÓN	CLIP PISTON	MO1417052	MT280216126	MT280216126	MT280216126	2
10	AROS PISTÓN	PISTON RING	MT120216020	MT250516040	MT710012808	MT710203010	2
11	GRAPA SUJECCION CABLES	WIRE SUPPORT	ET750502809	ET750502809	ET750502809	ET750502809	1
12	ALLEN 4X6 ZINCADO	M4X6 ALLEN	T0304006	T0304006	T0304006	T0304006	1
13	ARANDELA COBRE 6X12X1.5	6X12X1.5 WASHER	T4006713	T4006713	T4006713	T4006713	6
14	TORNILLO EXAGONAL CON ARANDELA M6x25 FIJA CULATA A CILINDRO	M6X25 EXAGONAL SCREW WITH WASHER	T0206025	T0206025	T0206025	T0206025	6
15	JUNTA CILINDRO 0,8 mm.	0,8 mm. GASKET CYLINDER BASE	MT70050GG-CHA1	MT280244000	MT280244000	MT280244000	1
15A	JUNTA CILINDRO 0,3 mm.	0,3 mm GASKET CYLINDER BASE		MT208224009	MT208224009	MT208224009	1
15B	JUNTA CILINDRO 1 mm.	1 mm. GASKET CYLINDER BASE		MT280244010	MT280244010	MT280244010	1
15C	JUNTA CILINDRO 0,5 mm.	0,5 mm. GASKET CYLINDER BASE		MT942002810	MT942002810	MT942002810	1
15D	JUNTA CILINDRO 0,15 mm.	0,15 mm. GASKET CYLINDER BASE		MT280244015	MT280244015	MT280244015	1
16	CTO. CILINDRO Y PISTON	SET CYLINDER AND PISTON	MT70000CT-CGC-1	MT70000CT-CGF-1	MT70000CT-CGH-1	MT70000CT-CGJ-1	1

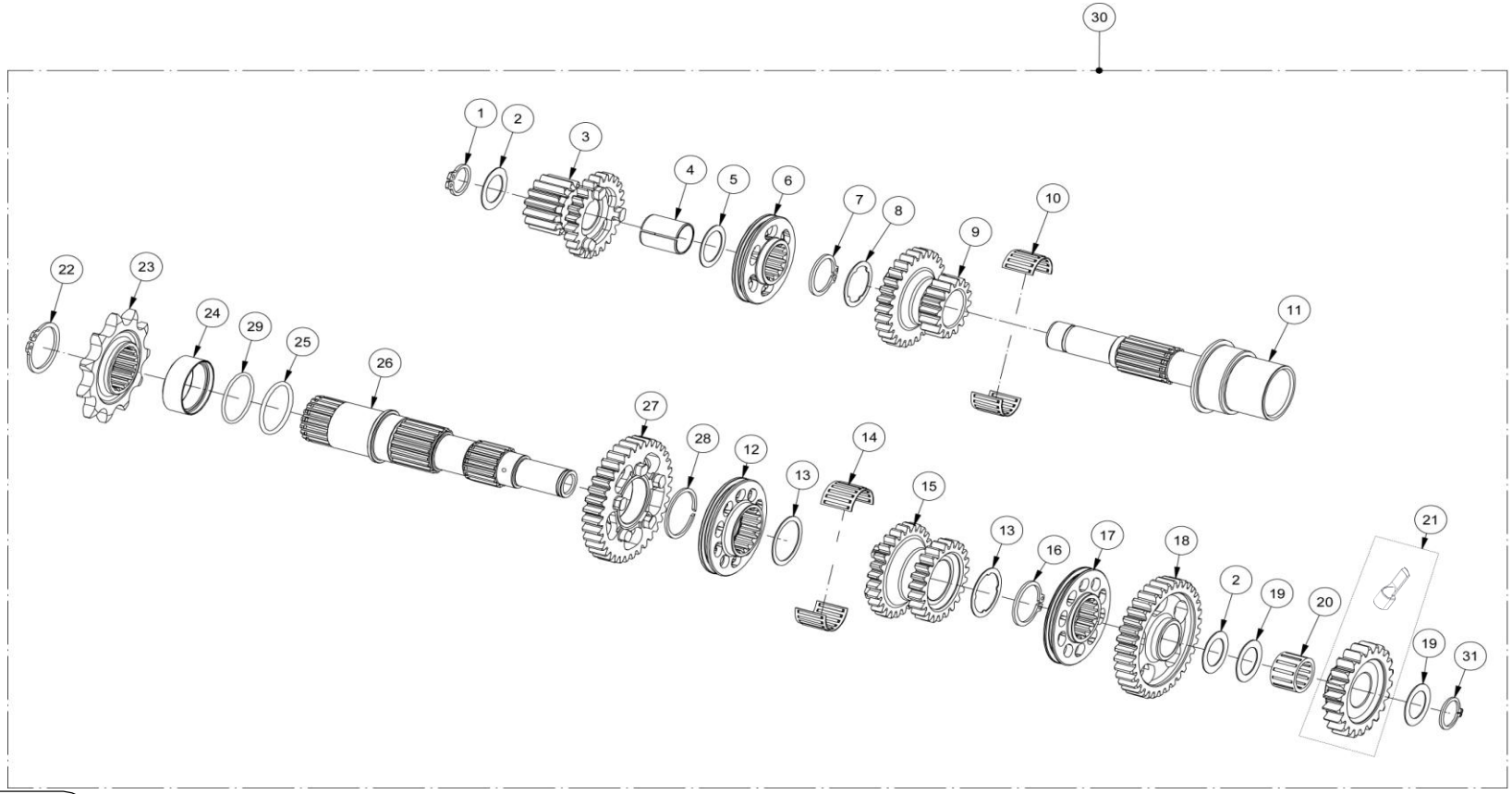
30
1
2
3
4
5
6
7
8
9
10
11
22
23
24
29
25
26
27
28
12
13
14
15
13
16
17
18
2
19
20
21
19
31

Nº	DESCRIPCION	DESCRIPTION			125	250 / 280 / 300	Cant.
1	CIRCLIP E15 DIN471	E15 CIRCLIP			MT280236163	MT280236163	2
2	ARANDELA 15,2X23X0,5	15,2X23X0,5 WASHER			T4001523	T4001523	1
3	PIÑÓN 2	GEAR 2			MT280236071	MT280236071	1
4	COJINETE FRICCION 15x17x20 EJE PRIMARIO	15x17x20 BEARING			MT280236164	MT280236164	1
5	ARANDELA 17X23X0,5	17X23X0,5 WASHER			T4001723	T4001723	1
6	DESPLAZABLE PRIMARIO	PRIMARY SELECTOR DISC			MT280236073	MT280236073	1
7	CIRCLIP E20 DIN 471 REBAJADO	E20 CIRCLIP			MT280236165	MT280236165	1
8	ARANDELA 20X25X0,5	20X25X0,5 WASHER			T4002025	T4002025	1
9	PIÑÓN 3	GEAR 3			MT280236072	MT280236072	1
10	JAULA AGUJAS	NEEDLE BEARING			MT280236162	MT280236162	2
11	EJE PRIMARIO	PRIMARY SHAFT			MT280236070	MT280236070	1
12	DESPLAZABLE 2 SECUNDARIO	SECONDARY SELECTOR DISC			MT280236080	MT280236080	1
13	ARANDELA 22X27X0,5	22X27X0,5 WASHER			T4002227	T4002227	2
14	JAULA AGUJAS	NEEDLE BEARING			MT280236161	MT280236161	2
15	PIÑÓN 5	GEAR 5			MT280236078	MT280236078	1
16	CIRCLIP E22 DIN471	E22 CIRCLIP			MT280236166	MT280236166	1
17	DESPLAZABLE 3 SECUNDARIO	SECONDARY SELECTOR DISC			MT280236079	MT280236079	1
18	PIÑÓN 3 SECUNDARIO	SECONDARY 3 GEAR			MT280236076	MT280236076	1
19	ARANDELA	WASHER			M02622001	M02622001	2
20	JAULA AGUJAS	NEEDLE BEARING			MT280226015	MT280226015	1
21	PIÑÓN INTERMEDIO Y TOPE ARRANQUE	KIT GEAR AND STOP KICK START PEDAL			MT880002810	MT880002810	1
22	CIRCLIP E25	E25 CIRCLIP			ME25936084	ME25936084	1
23	PIÑÓN CADENA SALIDA	SPROCKET, COUNTERSHAFT z.11			MT280236525	MT280236525	1
23B	PIÑÓN CADENA SALIDA	PROCKET, COUNTERSHAFT z.09			MT120236525	--------	1
23C	PIÑÓN CADENA SALIDA	SPROCKET, COUNTERSHAFT z.10			MT200236525	MT200236525	1
23D	PIÑON CADENA SALIDA	SPROCKET, COUNTERSHAFT Z12			MT280236526	MT280236526	1
24	CASQUILLO RETÉN SALIDA CAMBIO	SHIFT SEAL BUSHING			MT280236046	MT280236046	1
25	TÓRICA 25X2 NBR	NBR 25X2 O'RING			ME25632025	ME25632025	1
26	EJE SECUNDARIO	SECONDARY SHAFT			MT280236075	MT280236075	1
27	PIÑÓN 2 SECUNDARIO	SECONDARY 2 GEAR			MT280236077	MT280236077	1
28	CIRCLIP SW25	SW25 CIRCLIP			MT280236167	MT280236167	1
29	TÓRICA 25X1,5 NBR	25X1,5 O'RING			MT280212025	MT280212025	1
30	CTO. CAMBIO TRIAL	TRANSMISSION COMPLETE			MT280236010	MT280236010	1
31	CLIP DE 15MM PIÑÓN INT. ARRANQUE	15MM. CIRCLIP			M02623000	M02623000	1

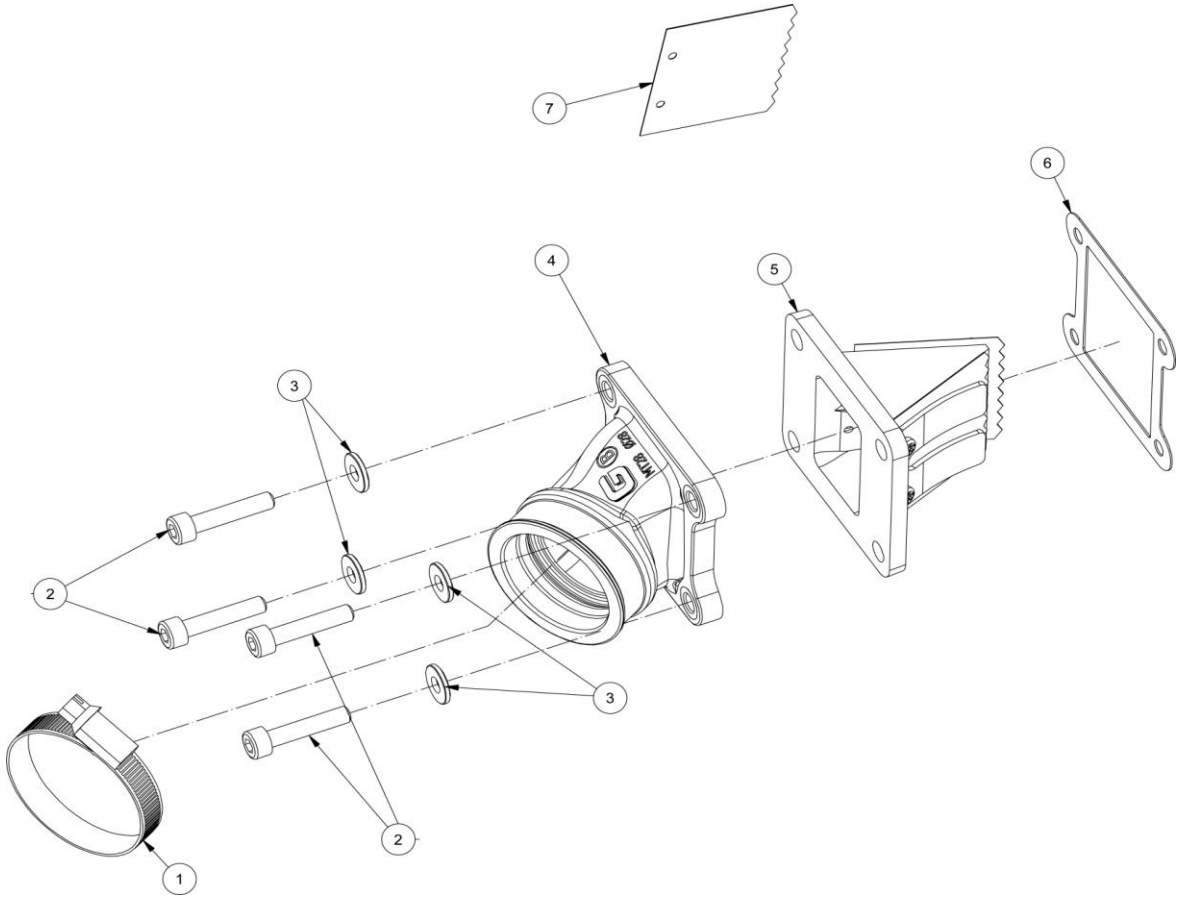
7
6
4
5
3
2
3
2
1

Nº	DESCRIPCION	DESCRIPTION				125 / 250 / 280 / 300	Cant.
1	ABRAZADERA S/44/9 W1	S/44/9 W1 CLAMP				BT280328038	1
2	TORNILLO ALLEN M5X20 DACROMET CEX	M5X20 DACROMET ALLEN SCREW				T0305020	4
3	ARANDELA 5X12X1,5	5X12X1,5 WASHER				T4005012	4
4	TUBERA ADMISION	INTAKE MANIFOLD				MT26000CT-CGI-1	1
5	CAJA LAMINAS TRIAL	REED VALVE				M01617200	1
6	JUNTA CAJA LAMINAS (CARTER)	REED VALVE GASKET (CRANKCASE)				MT280244005	1
7	LAMINA	REED PETAL				M01616000	2

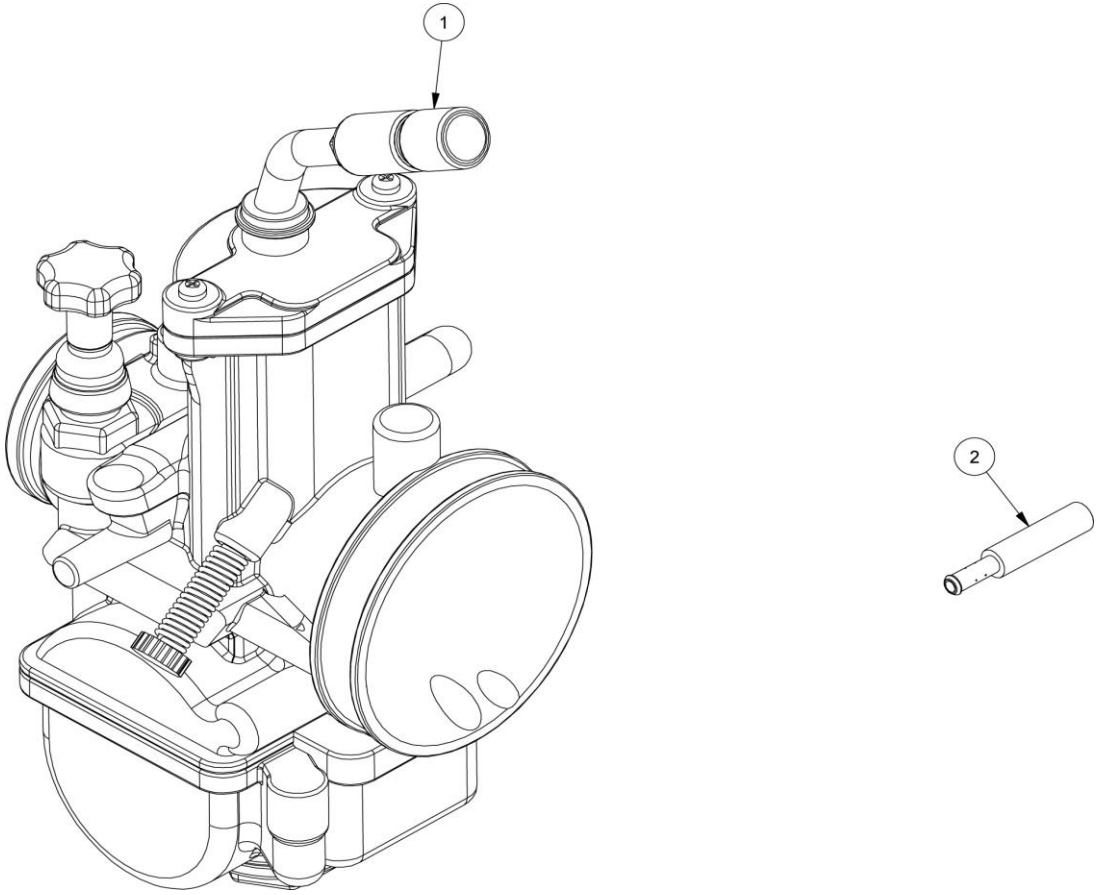
1
2

Nº	DESCRIPCION	DESCRIPTION		125	250 / 280	300	Cant.
1	CARBURADOR KEIHIN PWK28	KEIHIN PWK28 CARBURETOR		MT280390000RA	MT280390000RA	MT280390000RA	1
2	CHICLE RALENTI 52 (N424-21052)	52 IDLE JET (N424-21052)		ME200390052	------	------	1
3	CHICLE RALENTI 48 (N424-21052)	52 IDLE JET (N424-21052)		------	------	ME120390048	1

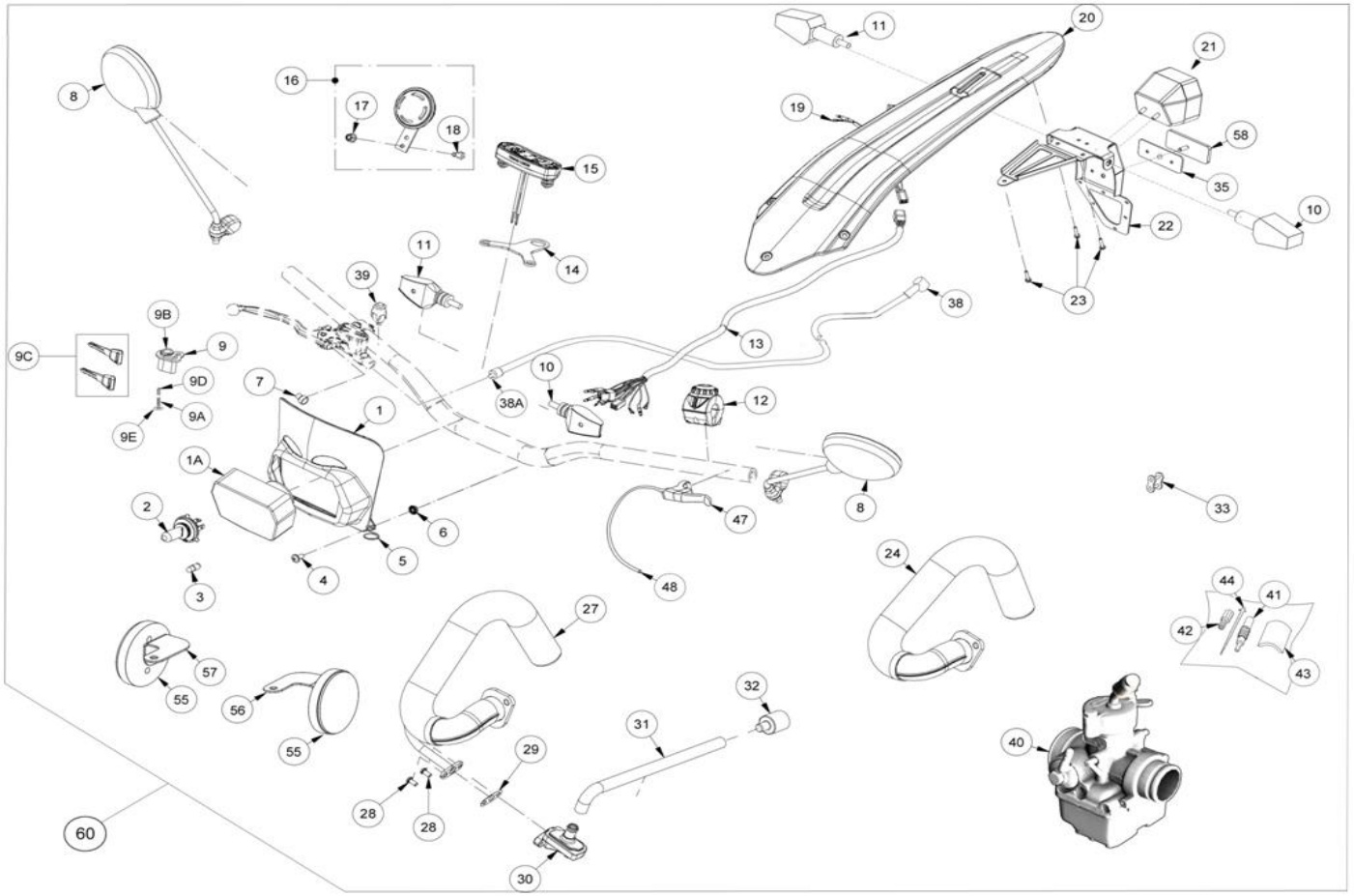
8
16
17
18
15
14
11
39
9B
9
9C
9D
9A
9E
7
1
1A
2
3
4
5
6
10
38A
13
12
38
19
20
11
21
58
35
22
23
10
47
48
8
33
24
44
41
42
43
27
57
55
56
55
32
31
29
28
28
30
40
60

Nº	DESCRIPCION	DESCRIPTION			125	250 / 280 / 300	Cant.
1	PLASTICO FARO TRIAL HOMOLOGADO NEGRO	HOMOLOGATED BLACK TRIAL HEADLIGHT				BT90500RH3009	1
1A	OPTICA FARO HOMOL.310.06	HOMOLOGATED OPTIC HEADLAMP				BT280120022	1
1B	TORN. ESPECIAL PLASTICO 3.1X6 CL81Z	SCREW FOR PLASTIC 3.1X6				T0803006	1
1C	ADH. FARO TRIAL PRO HOMOL RACING 2014	HOMOLOGATED STICK FOR HEADLIGHT				BT95021GG-CAS-1	1
2	BOMBILLA 12V 35W/35 (1221)	12V 35W/35 LAMP				L300122	1
3	LÁMPARA 12V15W CASQUETE	12V15W LAMP				L300115	1
4	ULS M6x14 CON ARANDELA	M6X14 ULS SCREW WITH WASHER				T0556014	2
5	ANILLA GUIA LATIGUILLO FRENO DELANTERO	RING FRONT BRAKE HOSE				BT611153013	1
6	TUERCA AUTOBLOCANTE M6 ESTRIADA	M6 NUT				T0556000	1
7	CASQUILLO PULSADOR FRENO DELANTERO	PUSH BUTTON BUSHING				BT613043013	1
8	RETROVISOR	REAR MIRROR				BT29000GG-CKR-1	2
9	CTO. CARCASA CLAUSOR TRIAL 2002	CTO. CARCASA CLAUSOR TRIAL 2002				BT280210071	1
9A	MUELLE CERRADURA CLAUSOR ZADI TRIAL	CLAUSOR-LOCK SPRING				BT15035GG-AIZ-1	1
9B	CERRADURA CLAUSOR TRIAL	TRIAL CLAUSOR-LOCK				BT280210075	1
9C	LLAVES CLAUSOR ZADI	ZADI CLAUSOR KEYS				BT15010GG-AIZ-1	1
9D	PIVOTE CLAUSOR	CLAUSOR PIN				BT15015GG-AIZ-1	1
9E	ARANDELA MUELLE ZADI PARA CLAUSOR	SPRING-WASHER FOR CLAUSOR				T4003009	1
10	INTERMITENTE IZQ. 2006 ref.911107	LEFT INDICATOR				BT280634019/2	2
11	INTERMITENTE DRCH. 2006 ref.911106	RIGHT INDICATOR				BT280634018/2	2
12	CONMUTADOR LUCES HOMOLOGADO E4 (CONTINUA)	HOMOLOGATED LIGHT SWITCH E4				ET60200GG-CKR-1	1
13	INSTALACION ELEC.TRIAL HOMOLOGADA E4	HOMOLOGATED ELECTRICAL INSTALLATION E4				ET10000GG-CKR-1	1
14	SOPORTE MULTIFUNCION TRIAL 2015	MUTIFUNCTION SUPPORT				BT22265GG-CJT-1	1
15	MULTIFUNCION TRIAL 2017 Km/h	TRIAL 2017 - MULTIFUNCTION Km/h				ET60000CT-CJT-1	1
15B	MULTIFUNCION TRIAL 2017 Km/h	TRIAL 2017 - MULTIFUNCTION M/h				ET60000CT-CJT-2	1
16	CLAXON	HORN SET				EM20400TT-CLR-1	1
17	TUERCA AUTOBLOCANTE BAJA M6 (DIN985)	M6 NUT				T2106001	1
18	ULS 6X10 C/ARANDELA PLATA	ULS 6X10 BOLT				T0556010	1
19	INST.ALARGO PILOTO TRASERO TRIAL PRO HOMOL.2006	EXTENDED ELEC. INSTALLATION REAR LIGHT				BT280634016	1
20	GUARDABARROS TRAS.HOMOL.TXT RAGA 2010 (NEGRO)	HOMOLOGATED REAR MUDGUARD				BT935013013H	1
21	FARO PILOTO TRASERO	REAR LIGHT				BT93925GG-CJT-1	1
22	PORTAMATRICULAS TRIAL 2017	NUMBER PLATE SUPPORT				BT93900GG-CKR-1	3
23	TORNILLO ROSCA CHAPA 4.2X13 ZINCADO CH88	4.2X13 SCREW				T0654213	1
24	CTO.CURVA ESCAPE TXT HOMOL	HOMOLOGATED EXHAUST				BT860003013CT	1
27	CURVA ESCAPE TRIAL PRO HOMOL	HOMOLOGATED EXHAUST				BT280626001H	2

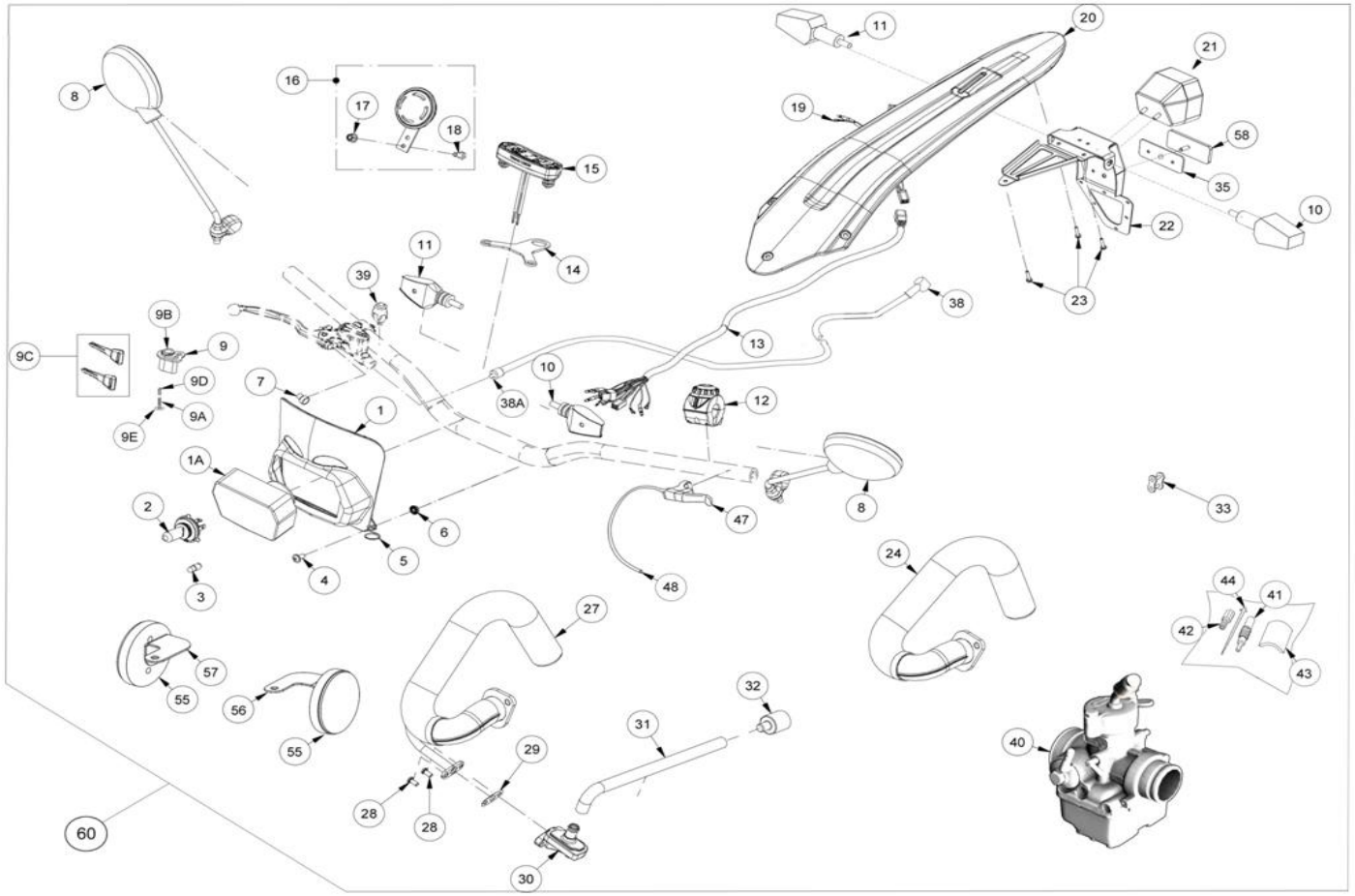
8
16
17
18
15
14
11
39
9B
9
9C
9D
9A
9E
7
1
1A
2
3
4
5
6
38A
10
12
13
38
23
22
35
58
21
20
19
11
10
8
47
48
24
33
44
41
42
43
40
27
32
31
29
28
28
30
57
55
56
55
60

Nº	DESCRIPCION	DESCRIPTION		125	250	280 / 300	Cant.
6	ULS M6x12	M6x12 ULS SCREW		T0506012	T0506012	T0506012	1
29	JUNTA VALVULA AIRE SECUNDARIO TRIAL 2006	SECONDARY AIR VALVE GASKET		BT280626065	BT280626065	BT280626065	1
30	VALVULA AIS 14GH-01AI-00 TRIAL 07 CEX	AIS VALVE		BT280626060	BT280626060	BT280626060	1
31	TUBO AIRE SECUNDARIO DE VALVULA A FILTRO CEX	AIR SECONDARY HOSE		BT280626062	BT280626062	BT280626062	1
32	FILTRO AIRE SECUNDARIO TRIAL PRO 2006 CEX	SECONDARY AIR FILTER		BT280626059	BT280626059	BT280626059	1
35	ESPUMA PILOTO TRASERO	FOAM REAR LIGHT		BE250234058	BE250234058	BE250234058	1
36	BRIDA UNEX	PLASTIC FLANGE		BE25634007	BE25634007	BE25634007	2
37	ELASTICO SUJECCION DEPOSITO	ELASTIC RUBBER TANK SUBJECTION		BE25636000	BE25636000	BE25636000	1
38	RACORD SENSOR FRENO TRASERO	SENSOR REAR BRAKE FITTING		BT662052811	BT662052811	BT662052811	1
38A	PULSADOR STOP PEQUEÑO	SMALL STOP ACTUATOR		L300066	L300066	L300066	1
39	BOTON DE PARO	STOP BUTTON		ET85500GG-CGI-1	ET85500GG-CGI-1	ET85500GG-CGI-1	1
40	CARBURADOR DELLORTO 2632 PHBG 21 DS	KIT CARBURETOR THROTTLE LIMITER		BT78000GG-CKR-1	BT78000GG-CKR-1	BT78000GG-CKR-1	1
41	CHICLE DE BAJA #33	SLOW JET		M09004033	M09004033	M09004033	1
41A	CHICLE DE BAJA #30	SLOW JET		NA	M09004030	NA	1
42	CHICLE DE ALTA #75	MAIN JET		BT78025GG-CKR-1	BT78025GG-CKR-1	BT78025GG-CKR-1	1
43	COMPUERTA CARBURADOR	CARBURETOR DOOR		M09002050	M09002050	M09002050	1
44	AGUJA W7 CARBURADOR	CARBURETOR NEEDLE		BT78020GG-CKR-1	BT78020GG-CKR-1	BT78020GG-CKR-1	1
45	ADAPTADOR TOBERA AIRE	AIR TUBE ADAPTER		BIT050428040	BIT050428040	BIT050428040	
46	ADAPTADOR TOBERA ADMISIÓN	IN TAKE TUBE ADAPTER		NA	BT78100GG-CKR-1	BT78100GG-CKR-1	1
46A	TOBERA ADMISIÓN	IN TAKE TUBE		MT26000CT-CKA-1	NA	NA	1
47	GATILLO STARTER EN MANILLAR	STARTER TRIGGER ON THE HANDLEBAR		BT25600GG-CKR-1	BT25600GG-CKR-1	BT25600GG-CKR-1	1
48	CABLE STARTER	STARTER CABLE		BT25601GG-CKR-1	BT25601GG-CKR-1	BT25601GG-CKR-1	1
49	ADHESIVO STARTER	STARTER ADHESIVE		PU00038002	PU00038002	PU00038002	1
50	LAMINA OBSTRUCCIÓN FILTRO AIRE	REED PETAL (AIR FILTER)		BT79800GG-CKR-1	BT79800GG-CKR-1	BT79800GG-CKR-1	1
51	REBOSADERO DEPOSITO GASOLINA	FUEL TANK OVERFLOW		BT76050GG-CKR-1	BT76050GG-CKR-1	BT76050GG-CKR-1	1
52	TUBO REBOSADERO DEPOSITO DE GASOLINA	FUEL TANK HOSE OVERFLOW		BT76055GG-CKR-1	BT76055GG-CKR-1	BT76055GG-CKR-1	2
53	PASACABLES ADHESIVO PARA TUBO GASOLINA REBOSADERO	ADHESIVE CABLE CLAMP		BT280428006	BT280428006	BT280428006	1
54	ADHESIVO PRESION HOMOLOGACIÓN NEUMATICOS	PRESSURE HOMOLOGATION LABEL		BT95255GG-CKR-1	BT95255GG-CKR-1	BT95255GG-CKR-1	2
55	CATADRIÓPTICO LATERAL	SIDE REFLECTOR PLATE		BM90210TT-CLR-1	BM90210TT-CLR-1	BM90210TT-CLR-1	1
56	SOPORTE IZQUIERDA CATADRIÓPTICO	LEFT REFLECTOR PLATE SUPPORT		BT93930GG-CKR-1	BT93930GG-CKR-1	BT93930GG-CKR-1	1
57	SOPORTE DERECHA CATADRIÓPTICO	RIGHT REFLECTOR PLATE SUPPORT		BT93931GG-CKR-1	BT93931GG-CKR-1	BT93931GG-CKR-1	1
58	CATADRIÓPTICO TRASERO	REAR REFLECTOR PLATE		BT93915GG-CJT-1	BT93915GG-CJT-1	BT93915GG-CJT-1	1
59	TORNILLO ALLEN ULS M5x12	ALLEN BOLT ULS M5x12		T0505012	T0505012	T0505012	1
60	KIT HOMOLOGACIÓN TXT GP 280 300 2017	HOMOLOGATION SET TXT GP 2017		NA	NA	BT99999CT-CKR-1	1
61	KIT HOMOLOGACIÓN TXT GP 250 2017	HOMOLOGATION SET TXT GP 2017		NA	BT99999CT-CKC-1	NA	1
62	KIT HOMOLOGACIÓN TXT GP 125 2017	HOMOLOGATION SET TXT GP 2017		BT99999CT-CKD-1	NA	NA	1

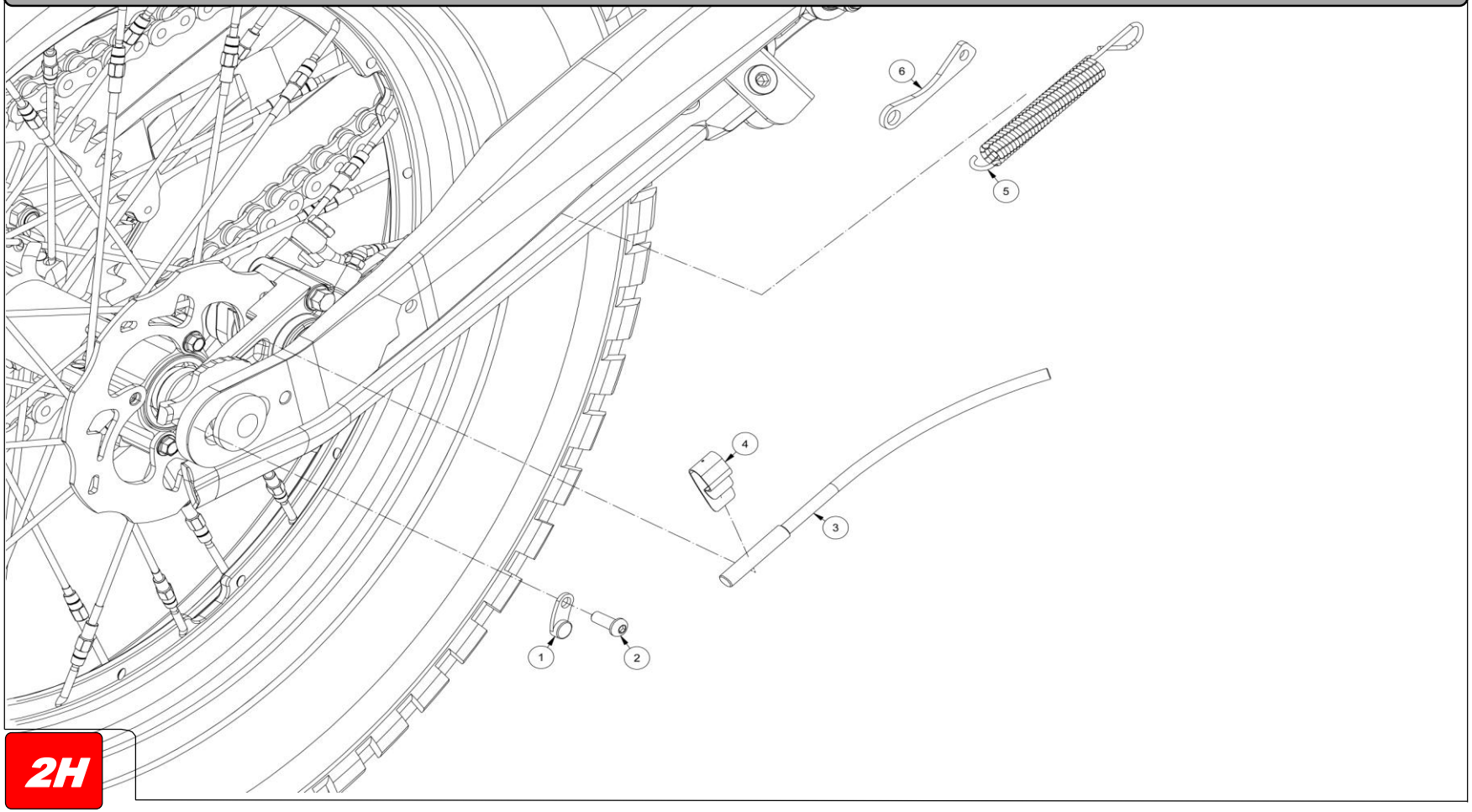
6
5
4
3
1
2

Nº	DESCRIPCION	DESCRIPTION			125	250 / 280 / 300	Cant.
1	IMAN CTA.KMS IPLA00300	SPEEDO MAGNET				BT280234012	1
2	ULS 6X16	M6X16 ULS SCREW				T0506016	1
3	GRAPA SUJECION SENSOR CTA. KM. TRIAL 2006	SPEEDO SENSOR CLIP FIXING				BT280634053	1
4	SENSOR CUENTAKILOMETROS RUEDA TRASERA TRIAL	REAR WHEEL SPEEDO SENSOR TRIAL				BT280634050	1
5	MUELLE CABALLETE TRIAL HOMOL.	SPRING STAND TRIAL HOMOL.OGATED				BT280310039H	1
6	EXCENTRICA CABALLETE TRIAL HOMOL.	ECCENTRIC HOMOLOGATED STAND TRIAL				BT280312025H	1
7	TORNILLO ALLEN M8x14	ALLEN SCREW M8x14				T0308014	1