DESPIECE / PART LIST

EC/SM-FSE 400 / 450

2004

GASGAS

CHASIS

Manillar / Handlebar GASGAS EC/SM FSE 2003

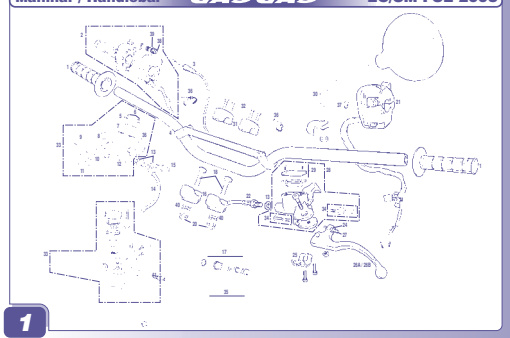

1

Eléctrico / Electric GASGAS FSE 2003

2

Plásticos / Plastics GASGAS FSE 2003

3

Chasis / Frame GASGAS FSE 2003

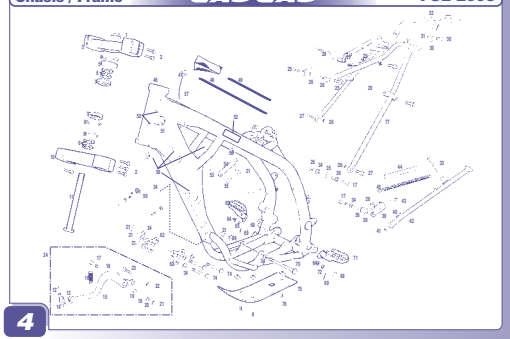

4

Cuerpo Mariposa GASGAS FSE 2003

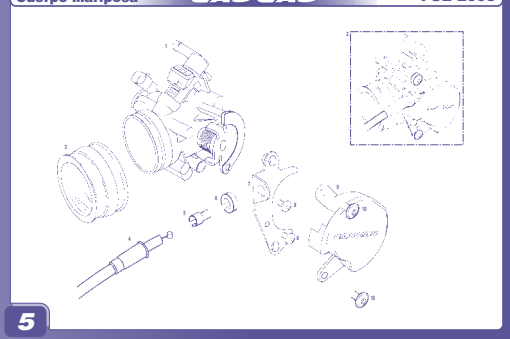

5

Filtro de aire / Air filter GASGAS FSE 2003

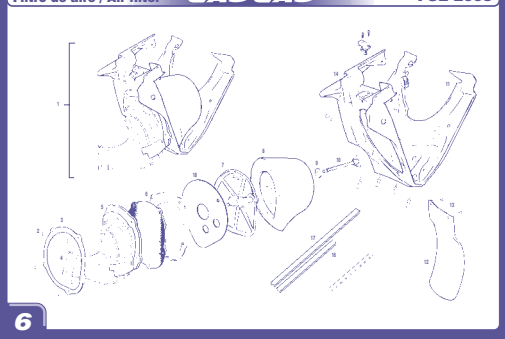

6

Basculante / Swingarm GASGAS FSE 2003

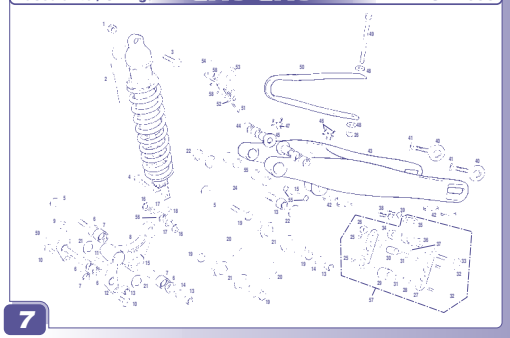

7

Tubo escape / Exhaust GASGAS FSE 2003

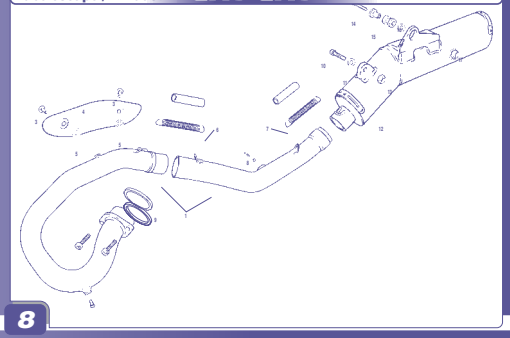

8

Adhesivos / Decals GASGAS FSE 2003

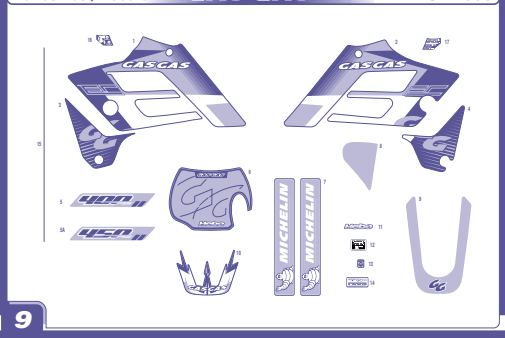

9

DESPIECE

FRAME

Adhesivos / Decals GASGAS SM FSE 2003

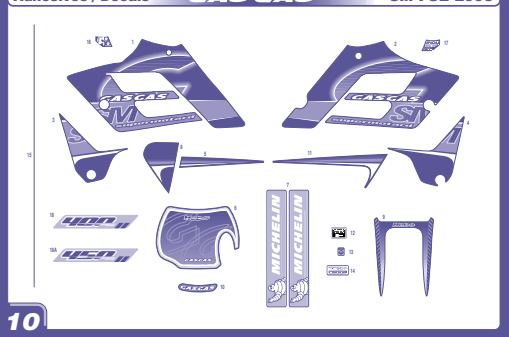

10

Depósito / Fuel tank GASGAS FSE 2003

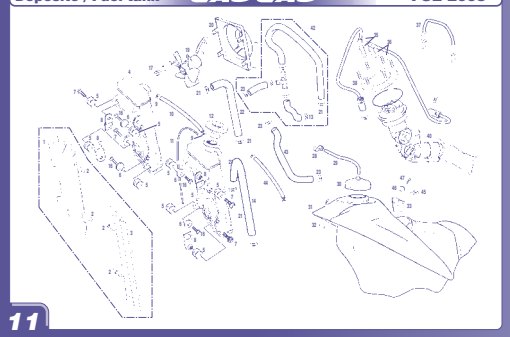

11

Rueda delantera / Front wheel GASGAS FSE 2003

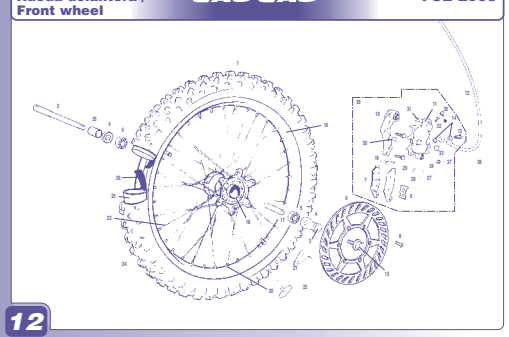

12

Rueda delantera / Front wheel GASGAS SM 2002

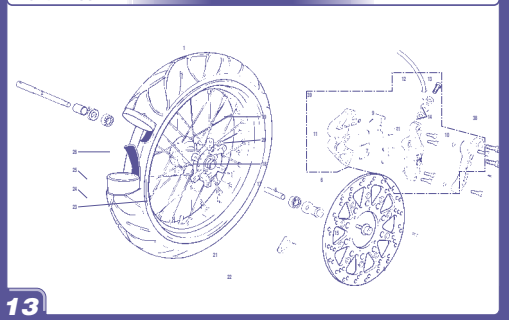

13

Rueda trasera / Rear wheel GASGAS FSE 2003

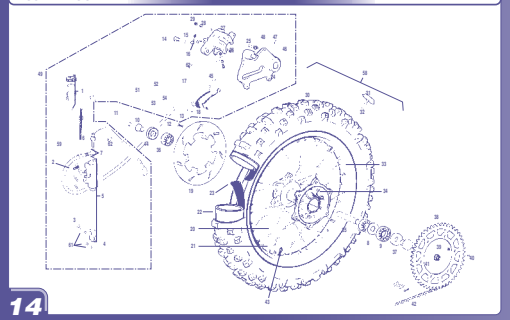

14

Rueda trasera / Rear wheel GASGAS SM 2002

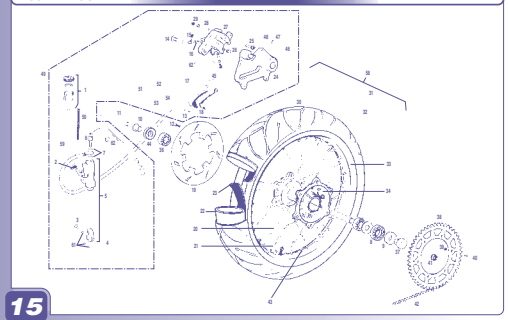

15

Horquilla WP / WP fork GASGAS FSE 2003

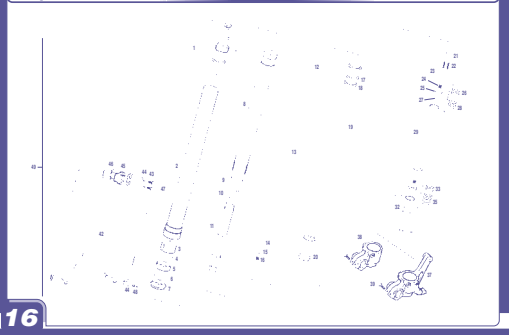

16

Horquilla MARZOCCHI / MARZOCCHI Fork GASGAS FSE 2003

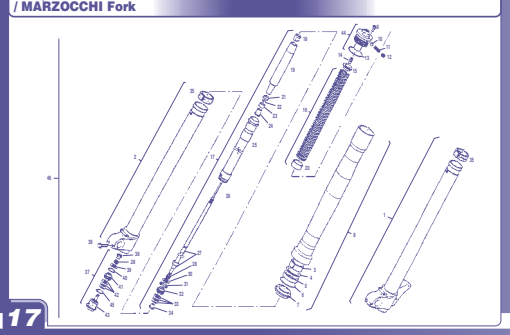

17

Horquilla ÖHLINS / ÖHLINS fork GASGAS FSE 2003

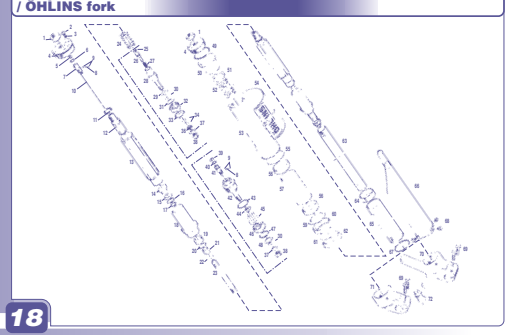

18

PART LIST

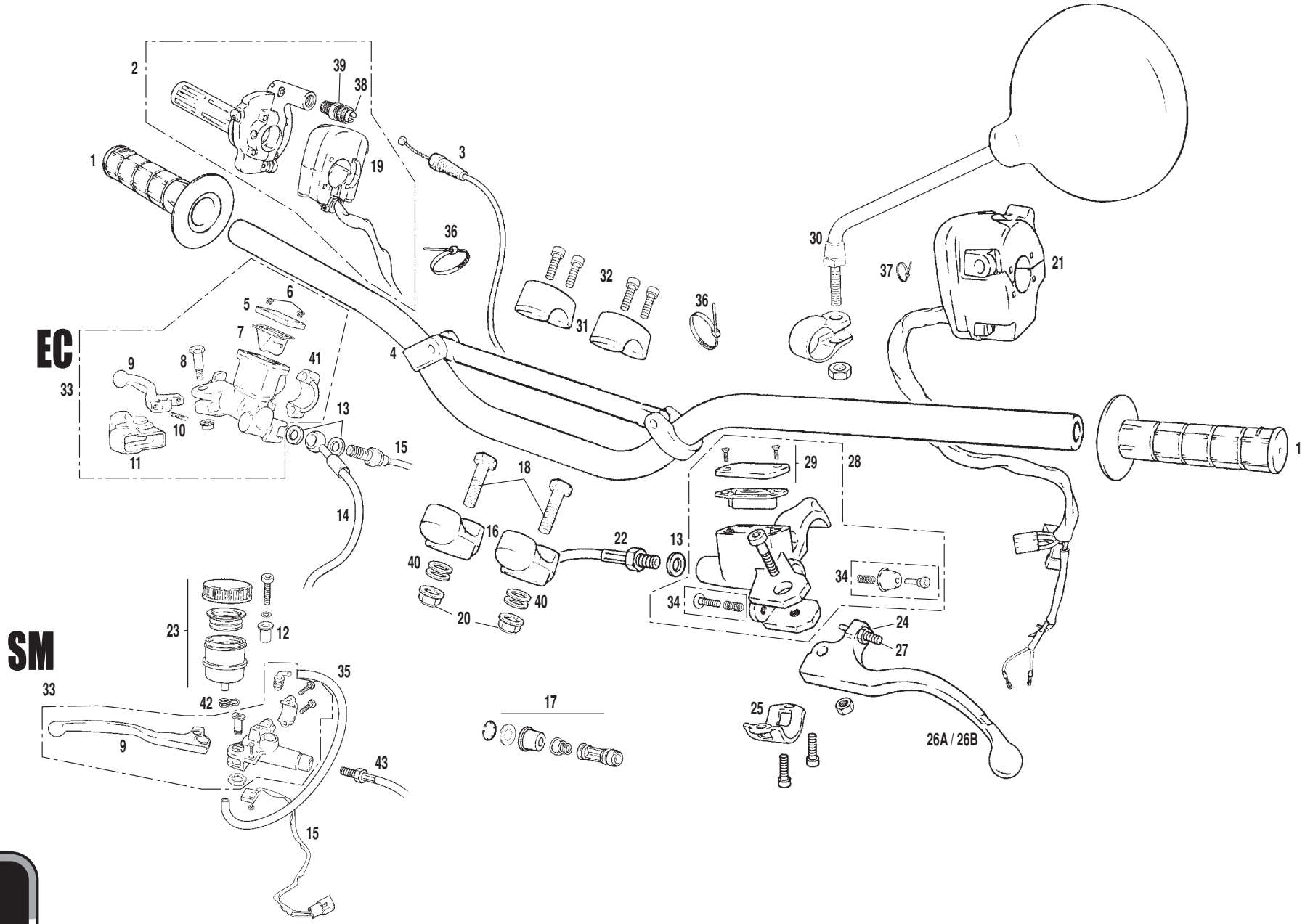
EC
SM
1
2
3
4
5
6
7
8
9
10
11
12
13
14
15
16
17
18
19
20
21
22
23
24
25
26A / 26B
27
28
29
30
31
32
33
34
35
36
37
38
39
40
41
42
43

Nº	DESCRIPCION / *DESCRIPTION*	EC FSE 2004	SM FSE 2004	Cant.
1	JUEGO DE EMPUÑADURAS / *HANDLEBAR GRIP (PAIR)*	BE250236002		1
2	PUÑO DE GAS / *TWIST GRIP*	BFS450324007		1
3	CABLE DE GAS / *THROTTLE CABLE*	BFS400124008		1
4	MANILLAR COMPLETO / *STEERING HANDLEBAR SET*	BE250224001		1
5	TAPA BOMBA FRENO / *BRAKE PUMP COVER*	BC25922210		1
6	TORNILLO TAPA BOMBA / *BRAKE PUMP SCREW*	BC25922217		2
7	GOMA ANTIESPUMANTE / *NO-FOAM RUBBER*	BC25922216		1
8	TORNILLO ESPECIAL / *SPECIAL SCREW*	BC25922212		1
9	MANETA FRENO DELANTERO / *FRONT BRAKE LEVER*	BC250022045	BE250122045SM	1
10	TENSOR MANETA BOMBA / *PUMP LEVER TENSOR*	BC25922218		1
11	GUARDAPOLVO / *DUST COVER*	BC25922213		1
12	CASQUILLO SILENTBLOCK SILENCIADOR / *EXHAUST SILENTBLOCK BUSHING*	-	BE250026000	1
13	ARANDELA LATIGUILLO 10X14X1 / *10X14X1 HOSE WASHER*	BE25622007		3
14	LATIGUILLO FRENO DELANTERO / *FRONT BRAKE HOSE*	BE250422002	BE250222002SM	1
15	INTERRUPTOR 23.024/1 STOP BOMBA NISSIN / *NISSIN PUMP STOP 23.024/1 SWITCH*	BE250034003/2	BE250134003SM	1
16	BRIDA SUJECCION MANILLAR INFERIOR / *HANDLEBAR CLAMP (LOWER)*	BE25814013		2
17	KIT PISTON BOMBA FRENO “A” / *“A” BRAKE PUMP PISTON KIT*	BC25922219		1
19	CONMUTADOR ARRANQUE / *STARTING COMMMAND*	BFS400134027		1
18	HEXAGONAL 10X40 / *10X40 HEXAGONAL BOLT*	T0110040		2
20	TUERCA AUTOBLOCANTE BAJA M10 CON ARANDELA / *M10 SELF-LOCKING NUT*	T2210000		2
21	CONMUTADOR LUZ / *LIGHT SWITCH*	BFS400134001		1
22	LATIGUILLO EMBRAGUE / *CLUTCH HOSE*	BE25622003		1
23	DEPÓSITO LIQUIDO FRENOS SM / *SM BRAKE FLUID TANK*	-	BE250110016SM	1
24	TORNILLO REGULACIÓN MANETA / *ADJUSTING LEVER SCREW*	BT27922046		1
25	SOPORTE BOMBA EMBRAGUE / *CLUTCH PUMP CLAMP*	BE250022211		1
26a	MANETA EMBRAGUE CORTA / *SHORT CLUTCH LEVER*	BT27922040		1
26b	MANETA EMBRAGUE LARGA (SERIE) / *LONG CLUTCH LEVER (STANDARD)*	E200701		1
27	TUERCA M6 BAJA / *M6 LOW NUT*	T2006001		1
28	BOMBA EMBRAGUE HIDRÁULICO / *HYDRAULIC CLUTCH PUMP*	BE250022009		1
29	KIT TAPA BOMBA FRENO Y EMBRAGUE / *CLUTCH AND BRAKE PUMP COVER KIT*	BT27722210		1
30	ESPEJO RETROVISOR / *REAR-VIEW MIRROR*	L300760		1
31	BRIDA SUJECCIÓN MANILLAR SUPERIOR / *HANDLEBAR CLAMP (UPPER)*	BE25814012		2
32	TORNILLO SUJECCIÓN BRIDA MANILLAR 8X30 / *8X30 CLAMP SCREW*	T0308030		4

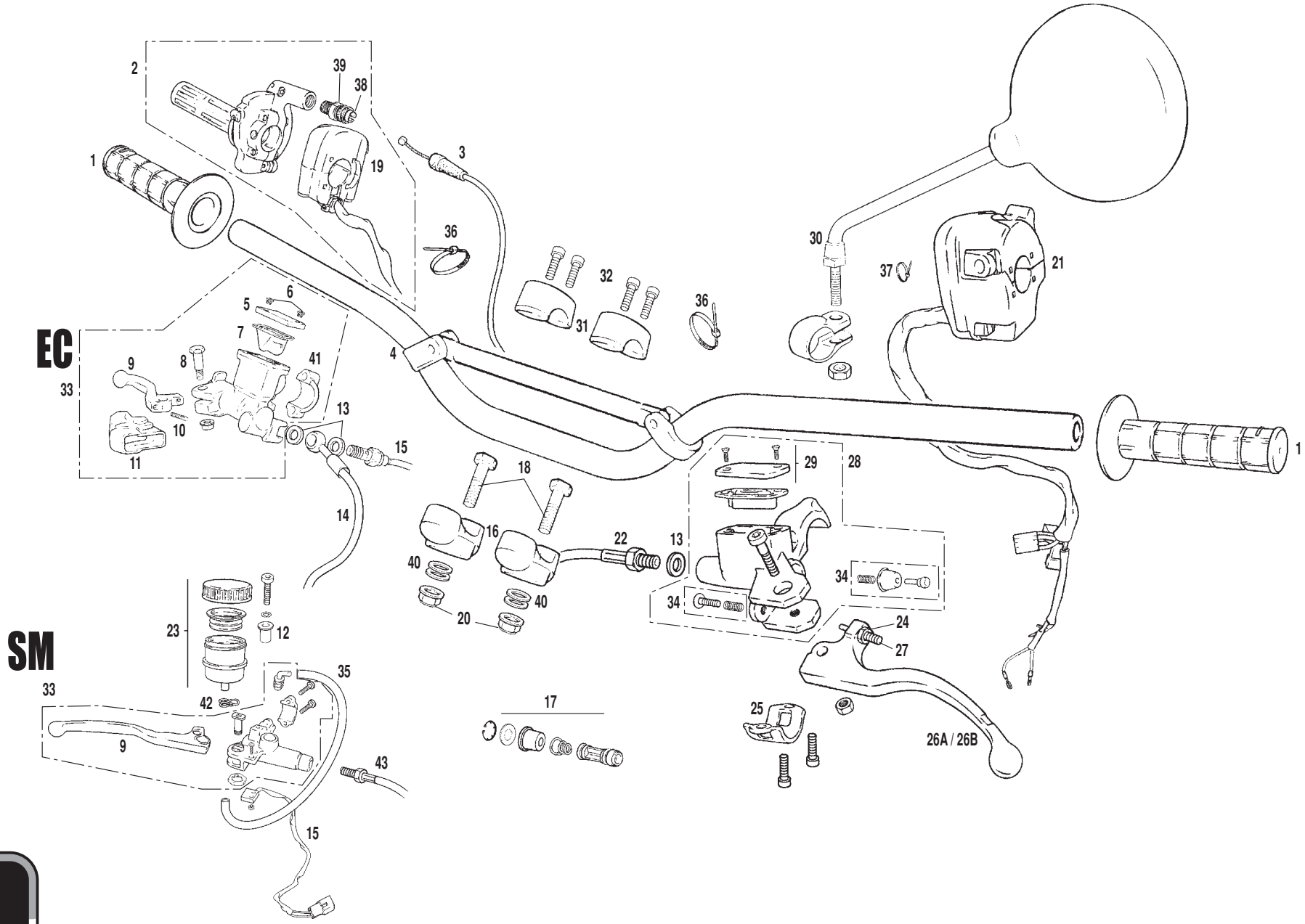
EC
SM
1
2
3
4
5
6
7
8
9
10
11
12
13
14
15
16
17
18
19
20
21
22
23
24
25
26A / 26B
27
28
29
30
31
32
33
34
35
36
37
38
39
40
41
42
43

Nº	DESCRIPCION / *DESCRIPTION*	EC FSE 2004	SM FSE 2004	Cant.
33	BOMBA FRENO DELANTERO / *FRONT BRAKE PUMP*	BC25922008/2		1
34	KIT REPARACIÓN / *REPARATION KIT*	R346000	BE250122008SM	1
35	TUBO LÍQUIDO FRENO A BOMBA / *BRAKE TO PUMP LIQUID HOSE*	-	BFS400310116SM	1
36	BRIDA GRANDE / *BIG CLAMP*	BC25922211		2
37	BRIDA PEQUEÑA / *LITTLE CLAMP*	BE25634010		1
38	TENSOR CABLE GAS / *THROTTLE CABLE TENSOR*	BFS400124012		1
39	TUERCA TENSOR / *TENSOR NUT*	BFS400124013		1
40	ARANDELA 3.5X30X10 / *3.5X30X10 WASHER*	BE250314035		4
41	BRIDA / *CLAMP*	BC25922211	R361700	1
42	ABRAZADERA MUELLE / *SPRING CLAMP*	BE25610044		2
43	LATIGUILLO FRENO DELANTERO / *FRONT BRAKE HOSE*	-	BFS450322002SM	1

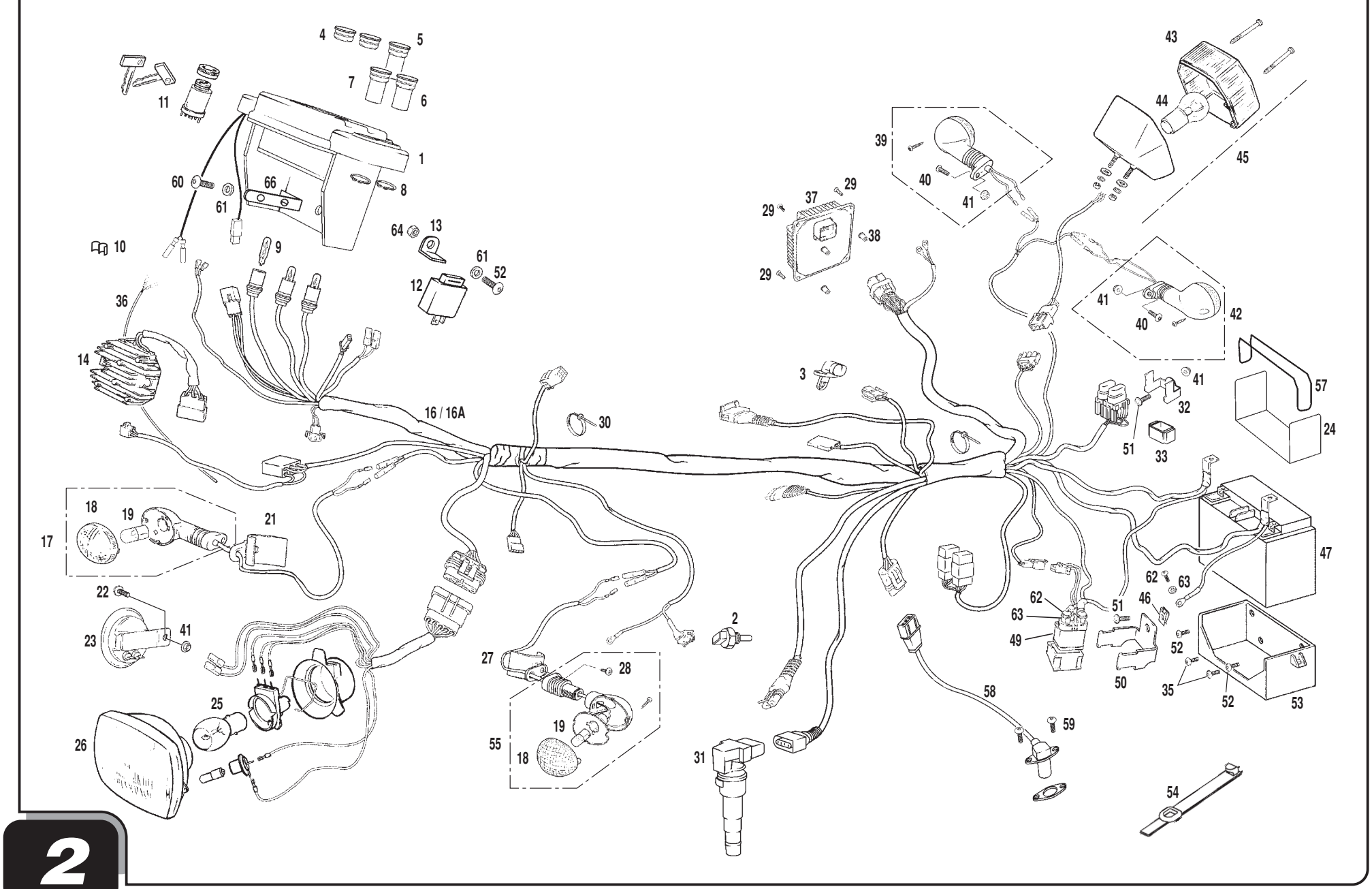
4
5
7
6
11
1
60
66
8
61
64
13
10
9
61
52
12
36
14
16 / 16A
30
3
39
40
41
43
44
45
29
37
29
38
29
41
40
42
41
32
51
33
57
24
18
19
21
17
22
23
41
47
62
63
62
63
51
46
49
52
50
35
52
53
2
27
28
25
26
55
19
18
31
58
59
54

Nº	DESCRIPCION / *DESCRIPTION*	FSE 400 cc.	FSE 450 cc.	Cant.
1	CTO. MULTIFUNCIÓN ENDURO 2003 FSE / *2003 ENDURO MULTIFUNCTION*	BFS400334045		1
2	SENSOR AGUA / *WATER SENSOR*	MFS400180004		1
3	SENSOR AIRE / *AIR SENSOR*	MFS400180003		1
4	TAPÓN TESTIGO NEGRO / *BLACK LIGHT CAP*	BE250134043		2
5	TESTIGO LUZ INTERMITENTE / *INDICATOR LIGHT*	BE250134036		1
6	TESTIGO LUZ POSICIÓN / *SHORT LIGHT INTICATOR*	BE250134037		1
7	TESTIGO LUZ LARGA / *LONG LIGHT INDICATOR*	BE250134038		1
8	CLIP TESTIGO / *LIGHT CLIP*	BE250134042		5
9	BOMBILLA 12V1,2-9W / *BULB 12V1.2-9W*	L300123		4
10	PASACABLES CTA. KM. ENDURO 2003 / *CABLE PASS SPEED COUTER*	BE250334053		2
11	CERRADURA CONTACTO CIERRE / *CONTACT LOCK WITH CATCH*	BFS450334032		1
12	CAJA INTERMITENCIAS / *INTERMITENT BOX*		BFS450334055	1
13	SOPORTE CAJA INTERMITENCIAS / *INTERMITENT BOX SUPPORT*		BFS450334057	1
14	REGULADOR / *REGULATOR*	MFS400134009		1
16	INSTALACION ELECTRICA FSE / *ELECTRICAL INSTALLATION*		MFS450480104	1
16A	INSTALACION ELECTRICA RACING FSE / *ELECTRICAL INSTALLATION RACING*		MFS450480104R	1
17	INTERMITENTE DERECHO DELANTERO / *RIGHT FRONT INDICATOR*	BE250134018		1
18	TAPA INTERMITENTE / *INDICATOR COVER*	BE250134120		4
19	BOMBILLA / *LAMP*	L200118		4
20	TUERCA M3 AUTOBLOCANTE / *SELF-LOCKING NUT M3*	T2103002		4
21	SOP. INTERMITENTE DELANTERO DERECHO / *RIGHT FRONT INDICATOR HOLDER*	BE250134017		1
22	TORNILLO 6X20 / *6X20 SCREW*	T0706020		1
23	CLAXON / *HORN*	BIE500134020		1
24	ESPUMA FIJACION CAJA BATERIA FSE400-4T / *BATTERY FOAM*	BFS400134091		1
25	BOMBILLA 12V45- 45W / *12V45 – 45W BULB*	L300124		1
26	OPTICA NORMAL / *STANDARD OPTIC*	BE250220024		1
27	SOP. INTERMITENTE DELANTERO IZQUIERDO / *LEFT FRONT INDICATOR HOLDER*	BE250134020		1
28	TORNILLO CHAPA 6,3X16 / *SPECIAL SCREW*	T0706316		2
29	ULS 5X20 / *5X20 ULS BOLT*	T0505020		3
30	BRIDA UNEX 4,8X36 / *UNEX CLAMP 4.8X36*	BE25634007		2
31	PIPA BUJIA / *SPARK PLUG CAB*		BFS450334000	1
32	SOPORTE FUSIBLES ENDURO 4T 2004 / *FUSE SUPPORT*		BFS450480119	1
33	GOMA SOPORTE FUSIBLES ENDURO 4T 2004 / *FUSE SUPPORT RUBBER*		BFS450480121	1

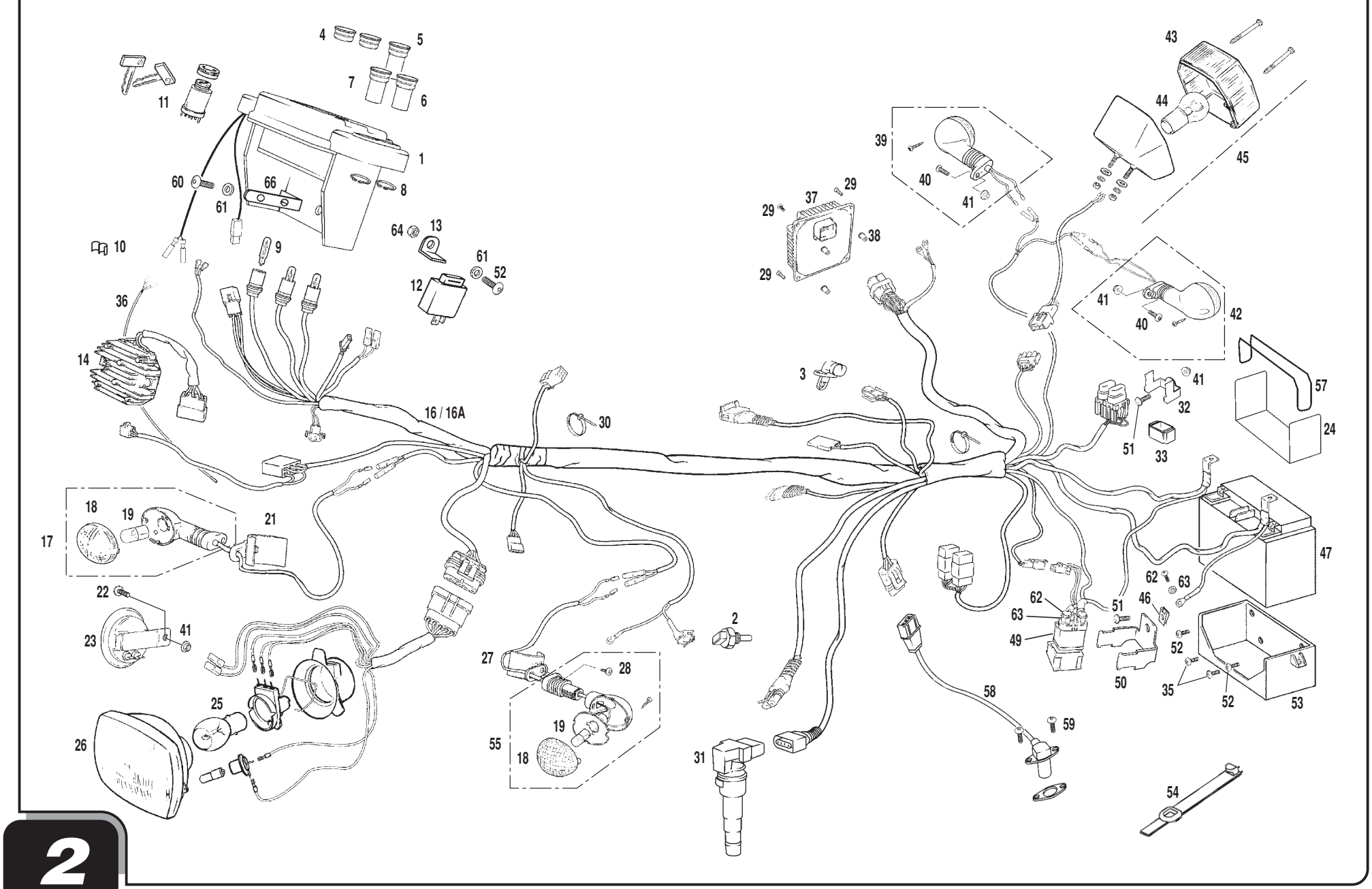
4
5
7
6
11
1
60
66
8
61
64
13
10
9
61
52
12
36
14
16 / 16A
30
3
39
40
41
43
44
45
29
37
29
38
29
41
40
42
41
32
51
33
57
24
18
19
21
17
22
23
41
47
62
63
62
63
51
46
49
52
50
35
52
53
2
27
28
25
26
55
19
18
31
58
59
54

Nº	DESCRIPCION / *DESCRIPTION*	FSE 400 cc.	FSE 450 cc.	Cant.
35	ULS 6X14 / *6X14 ULS BOLT*	T0556014		2
36	CABLE MULTIFUNCION TT 2003 / *MULTIFUNCTION CABLE*	BE250334050		1
37	CENTRALITA / *SWITCHBOARD*	MFS400180001		1
38	INJERTO GOMA SUJECCION CENTRALITA / *SWITCHBOARD SUBJECTION RUBBER*	BQ300214066		3
39	INTERMITENTE DERECHO TRASERO / *RIGHT REAR INDICATOR*	BE250134021		1
40	ULS 6X16 NEGRO / *6X16 BLACK ULS*	T0506016N		2
41	TUERCA CON ARANDELA M6 / *M6 NUT WITH WASHER*	T2206002		4
42	INTERMITENTE IZQUIERDO TRASERO / *LEFT REAR INDICATOR*	BE250134022		1
43	CRISTAL FARO TRASERO / *REAR LIGHT CAP*	BP25734015		1
44	BOMBILLA 12V5-21W / *12V5-21W BULB*	L300116		1
45	PILOTO TRASERO EC2002 / *EC2002 REAR LIGHT*	BE250234015		1
46	TUERCA RÁPIDA M6 / *M6 FAST NUT*	T2606000		1
47	BATERIA EC400-4T / *EC400 4T BATTERY*	BFS400134080/3		1
49	RELE ARRANQUE / *STARTING RELAY*	BFS400134075/2		1
50	SOPORTE RELE ARRANQUE / *STARTING RELAY SUPPORT*		BFS450434076	1
51	TORNILLO ULS 6x16 C/ARAND / *6X16 ULS SCREW WITH WASHER*	T0556016		2
52	TORNILLO ULS 6X12 / *6X12 ULS SCREW*	T0556012		3
53	CAJA BATERIA EC400-4T / *BATTERY BOX*	BFS400134083		1
54	GOMA SUJECCION CDI / *CDI ELASTIC BAND*	BE250034100		1
55	INTERMITENTE IZQUIERDO DELANTERO / *LEFT FRONT INDICATOR*	BE250134019		1
57	TORICA TAPA F.114X4 / *F114X4 COVER O'RING*	P270100		1
58	SENSOR GIRO / *TURN SENSOR*	MFS400180005		1
59	ULS 5x9 / *5x9 ULS BOLT*	T0505009		2
60	ULS 6X16 / *6X16 ULS BOLT*	T0506016		1
61	ARANDELA 6X18X1,5 / *6X18X1,5 WASHER*	T4006018		2
62	TORNILLO ULS 6X10 / *6X10 ULS BOLT*	T0506010		4
64	TUERCA M6 AUTOBLOCANTE BAJA / *LOWER M6 SELF-LOCKING NUT*	T2106000		1
66	SOPORTE CONECTOR CABLEADO LUMINARIA / *LIGHTS CONNECTIONS SUPPORT*		MFS450480120	1

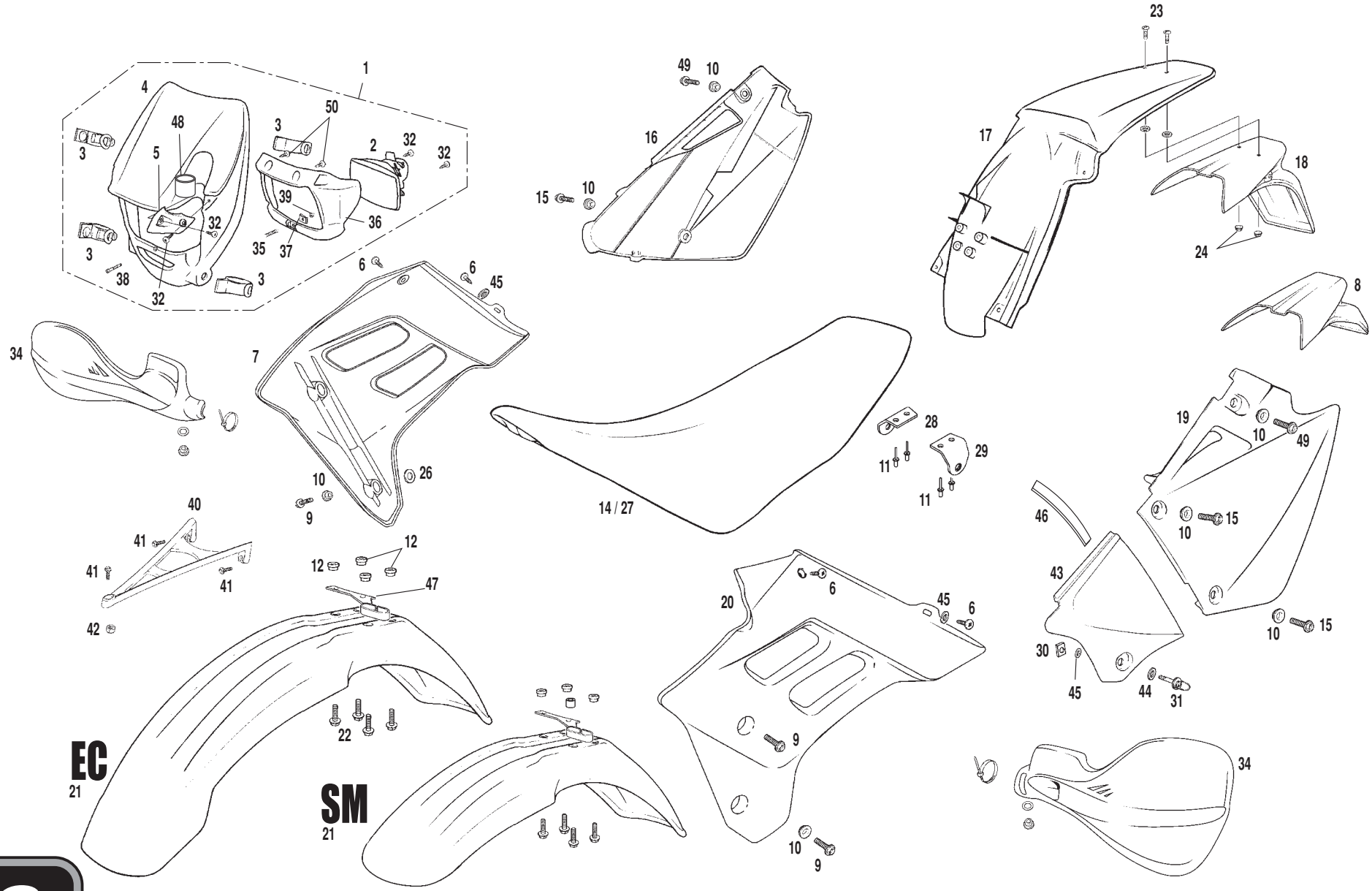
1
4
48
5
3
50
2
32
39
36
35
37
38
6
45
7
34
26
10
9
40
41
42
12
47
22
EC
21
SM
21
49
16
15
17
23
18
24
8
28
29
11
14 / 27
19
46
43
30
44
31
20
34

Nº	DESCRIPCION / *DESCRIPTION*	EC-FSE 2004	SM-FSE 2004	Cant.
1	CTO. FARO DELANTERO GRANADA 2001 / *GRANADA 2001 FRONT HEADLAMP*	BE250420020	BE250420020SM	1
2	OPTICA NORMAL / *STANDARD LAMP*	BE250220024		1
3	GOMA SUJECCIÓN FARO / *HEADLAMP ELASTIC BAND*	BE25636015		4
4	FARO DELANTERO GRANADA 2001 / *FRONT HEADLAMP GRANADA20001*	BE250420020	BE250420020SM	1
5	TAPETA GUÍA FARO / *HEADLAMP GUIDE COVER*	BX250120023	BE250120023SM	1
6	TORNILLO ROSCA CHAPA 4,8X13 / *SCREW 4,8X13*	T0606013		4
7	TAPA LAT. RADIADOR DERECHO FSE 4T / *FSE 4T RIGHT SIDE RADIATOR COVER*	BFS450420012	BFS450420012SM	1
8	PORTAMATRICULA COMPETICIÓN / *RACING LICENSE PLATE HOLDER*	BE250121003		1
9	TORNILLO ESPECIAL 6X16 ZINCADO / *ZINC-TREATED SPECIAL SCREW 6X16*	T0206016		4
10	CASQUILLO TAPA RADIADOR ALUMINIO / *ALUM. RADIATOR COVER BUSH*	BE250032060		9
11	REMACHE 14X4 / *14X4 RIVET*	BE25610017		4
12	CASQUILLO GUARDABARROS CON VOLONA / *FRONT FENDER BUSHING*	BE250014118		4
14	SILLIN / *SEAT*	BFS450410015		1
15	TORNILLO ESPECIAL 6X20 / *6X20 SPECIAL SCREW*	T0206020		3
16	PORTA NÚMERO LATERAL DERECHO / *RIGHT SIDE COVER*	BFS450420004	BFS450420004SM	1
17	GUARDABARROS TRASERO / *REAR FENDER*	BFS450420007	BFS450420007SM	1
18	PORTAMATRICULA TRASERO EC2004 / *REAR LICENSE PLATE HOLDER*	BE250420003		1
19	PORTANÚMERO LATERAL IZQUIERDO / *LEFT SIDE COVER*	BFS450420005	BFS450420005SM	1
20	TAPA LAT. RADIADOR IZQUIERDO FSE 4T / *FSE 4T LEFT SIDE RADIATOR COVER*	BFS450420013	BFS450420013SM	1
21	GUARDABARROS DELANTERO EC2004 / *EC2004 FRONT FENDER*	BE250420006	BE250420006SM	1
22	TORNILLO ESPECIAL M6X25 / *M6X25 SPECIAL SCREW*	T0606025		4
23	TORNILLO PHILIPS M6X25 / *M6X25 PHILIPS SCREW*	T0706025		2
24	TUERCA AUTOBLOCANTE ALTA M6 / *M6 SELF-LOCKING NUT*	T2106002		2
25	TOPE GOMA PLACA LATERAL / *SIDE COVER RUBBER END*	BE250020104		2
26	ARANDELA NYLON 6,5X16X1 / *6.5X16X1 NYLON WASHER*	T06065017		4
27	FUNDA SILLIN / *SEAT COVER*	BE250410055		1
28	SOPORTE SILLIN DERECHO ALUMINIO / *RIGHT ALUM. SEAT HOLDER*	BFS400310019		1
29	SOPORTE SILLIN IZQUIERDO ALUMINIO / *LEFT ALUMINUM SEAT HOLDER*	BFS400310020		1
30	CIERRE RÁPIDO / *FAST LOCKING*	BE250128026		1
31	TORNILLO CIERRE RÁPIDO / *FAST-LOCKING SCREW*	BE250128027		1
32	TORNILLO ROSCA CHAPA 3.5X13 / *3,5X13 SCREW*	T0603513		4
34	JUEGO PARAMANOS HP20 / *HANDS-PROTECTOR SET*MUELLE TORNILLO	BTL400220034GC		1

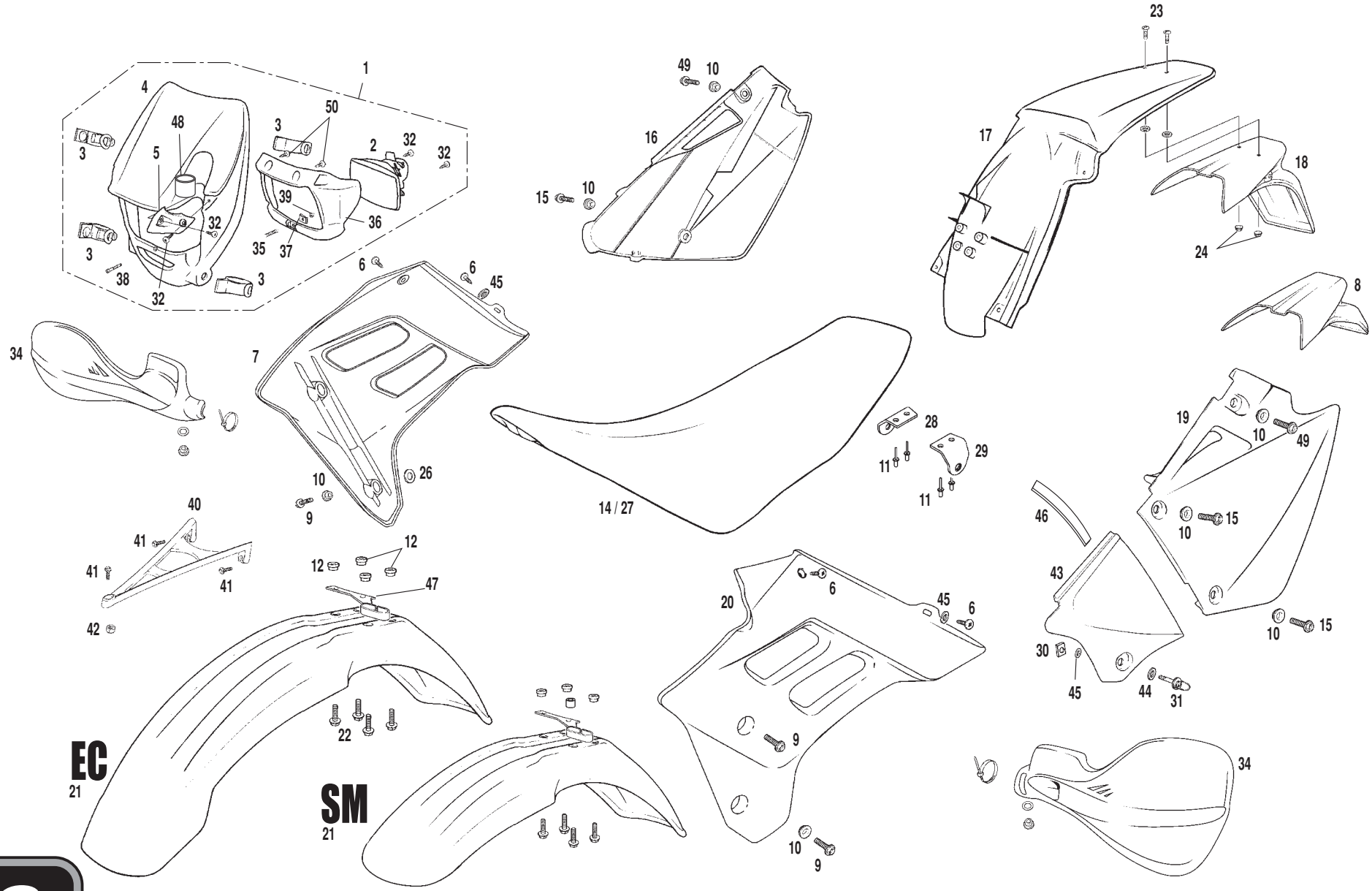
1
4
48
5
3
50
2
32
39
36
35
37
38
6
45
7
34
26
10
9
40
41
42
12
47
22
EC
21
SM
21
49
16
15
17
23
18
24
8
28
29
11
14 / 27
19
46
43
30
44
31
20
34

Nº	DESCRIPCION / *DESCRIPTION*	FSE 2004	Cant.
35	REGULADOR OPTICA / *SCREW REG. LAMP SPRING*	BX250020026	1
36	SOPORTE FARO GRANADA / *GRANADA BASE LAMP*	BX250020027	1
37	GRAPA REGULADOR FARO GRANADA / *LAMP REGULATION NUT*	BX250020029	1
38	ALLEN REGULADOR OPTICA / *LAMP REGULATION ALLEN BOLT*	T0304035	1
39	TUERCA TORNILLO REGULADOR OPTICA / *SCREW LAMP REGULATION WASHER*	T2004000	1
40	TIRANTE GUARDABARROS DELANTERO / *FRONT FENDER BRACE*	BE250220039	1
41	TORNILLO ULS 6X20 / *6X20 SCREW*	T0506020	3
42	TUERCA M6 CON ARANDELA ESTRIADA / *M6 NUT WITH WASHER*	T2206000	1
43	TAPA LATERAL CAJA FILTRO / *AIR FILTER SIDE COVER*	BE300428025	1
44	ARANDELA 5X12X1,5 / *5X12X1,5 WASHER*	T4005012	1
45	ARANDELA NYLON 4X14X1 / *4X14X1 NYLON WASHER*	T6004141	3
46	JUNTA ESPUMA TAPA CAJA FILTRO / *AIR FILTER COVER GASKET*	BE250228031	1
47	GUÍA CABLE / *CABLE GUIDE*	BE250420016	1
48	ANILLA NEGRA / *BLACK O'RING*	BE25920053	1
49	TORNILLO ESPECIAL 6X25 / *6X25 SPECIAL SCREW*	T0206025	2
50	TORNILLO ROSCA-CHAPA 3X9 / *3X9 SCREW*	T1003009	2

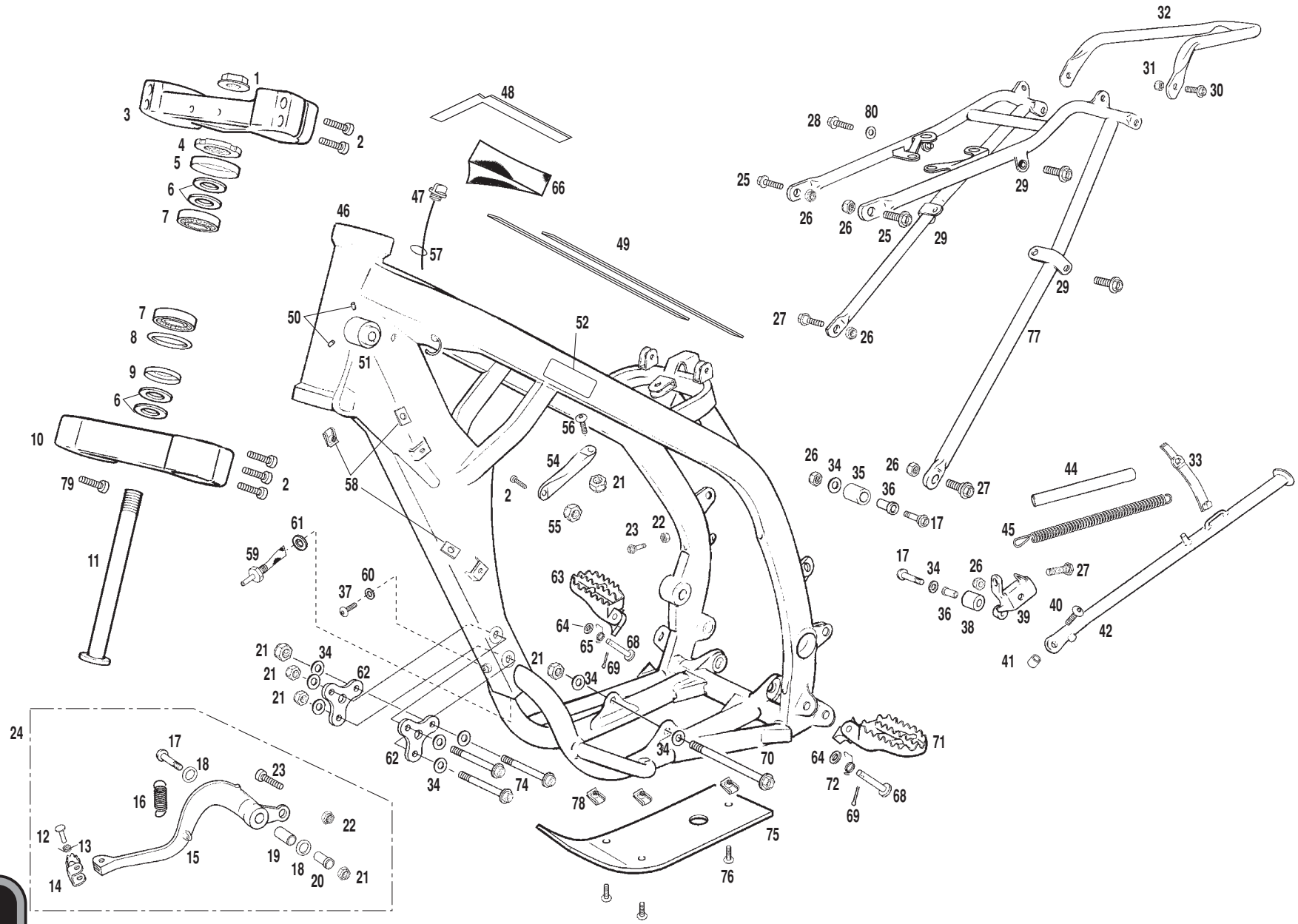
1
2
3
4
5
6
7
8
9
10
11
12
13
14
15
16
17
18
19
20
21
22
23
24
25
26
27
28
29
30
31
32
33
34
35
36
37
38
39
40
41
42
44
45
46
47
48
49
50
51
52
54
55
56
57
58
59
60
61
62
63
64
65
66
68
69
70
71
72
74
75
76
77
78
79
80

Nº	DESCRIPCION / *DESCRIPTION*	FSE 2004	Cant.
1	TUERCA DIRECCIÓN / *STEERING SHAFT NUT*	BE25610030	1
2	ALLEN 7X30 / *7X30 ALLEN BOLT*	T0307030	10
3	BRIDA SUPERIOR SUSPENSIÓN CROSS / *CROSS FORK CLAMP (UPPER)*	BC250014001	1
4	TUERCA DIRECIÓN INFERIOR / *LOWER STEERING SHAFT NUT*	BE25610029	1
5	GUARDAPOLVO COJINETE DIRECCIÓN / *BEARING DUST COVER*	BE25610126	1
6	ARANDELA DIRECCIÓN / *STEERING WASHER*	BE25610028	4
7	COJINETE DIRECCIÓN / *STEERING BEARING*	BE25610008	2
8	TORICA DIRECCIÓN 50X5 / *50X5 STEERING O'RING*	BE25610012	1
9	CAZOLETA DIRECCIÓN / *STEERING CAP*	BE25610026	1
10	BRIDA INFERIOR SUSPENSIÓN CROSS / *CROSS FORK CLAMP (LOWER)*	BC250214002	1
11	TIJA DIRECCIÓN / *STEERING SHAFT*	BE25614003	1
12	PASADOR PUNTERA DIN 660 6X22 / *DIN 660 6X22 BRAKE PIN*	BE25922018	1
13	MUELLE PUNTERA PEDAL RETRÁCTIL / *BRAKE PEDAL END SPRING*	ME25636029	1
14	PUNTERA PEDAL FRENO EC4T / *EC4T BRAKE PEDAL END*	BT27922017	1
15	PEDAL FRENO / *BRAKE PEDAL*	BE250022016	1
16	MUELLE PEDAL FRENO / *BRAKE PEDAL SPRING*	BE25610023	1
17	TORNILLO ESPECIAL 8X45 / *8X45 SPECIAL SCREW*	T0208045	3
18	TORICA PEDAL / *PEDAL O'RING*	ME25610026	2
19	GLACIER PEDAL FRENO / *BRAKE PEDAL BEARING*	BE250010009	1
20	CASQUILLO SOPORTE PEDAL FRENO / *BRAKE PEDAL SUP. BUSHING*	BE250210916	1
21	TUERCA AUTOBLOCANTE CON ARANDELA M8 / *M8 SELF-LOCKING NUT*	T2208002	1
22	TUERCA HEXAGONAL M6 BAJA / *M6 LOW HEXAGONAL BOLT*	T2106001	2
23	HEXAGONAL 6X25 / *6X25 HEXAGONAL SCREW*	T0106025	2
24	CTO. PEDAL FRENO / *BRAKE PEDAL SET*	BFS400322016CT	1
25	TORNILLO ESPECIAL 8X25 / *8X25 SPECIAL SCREW*	T02080255	2
26	TUERCA AUTOBLOCANTE M8 BAJA / *LOW M8 SELF-LOCKING NUT*	T2108001	6
27	TORNILLO ESPECIAL 8X20 / *8X20 SPECIAL SCREW*	T0208020	3
28	ULS 6X25 / *6X25 ULS*	T0506025	1
29	TUERCA REMACHABLE / *RIVETABLE NUT*	T2706000	2
30	ALLEN 8X25 / *8X25 ALLEN SCREW*	T0308025	2
31	TUERCA AUTOBLOCANTE M8 CON ARANDELA / *SELF-LOCKING M8 NUT*	T2208002	1
32	COLIN SOPORTE GUARDABARROS TRASERO ALUM. / *REAR FENDER ALUMINIUM SUPPORT*	BFS400110018	1

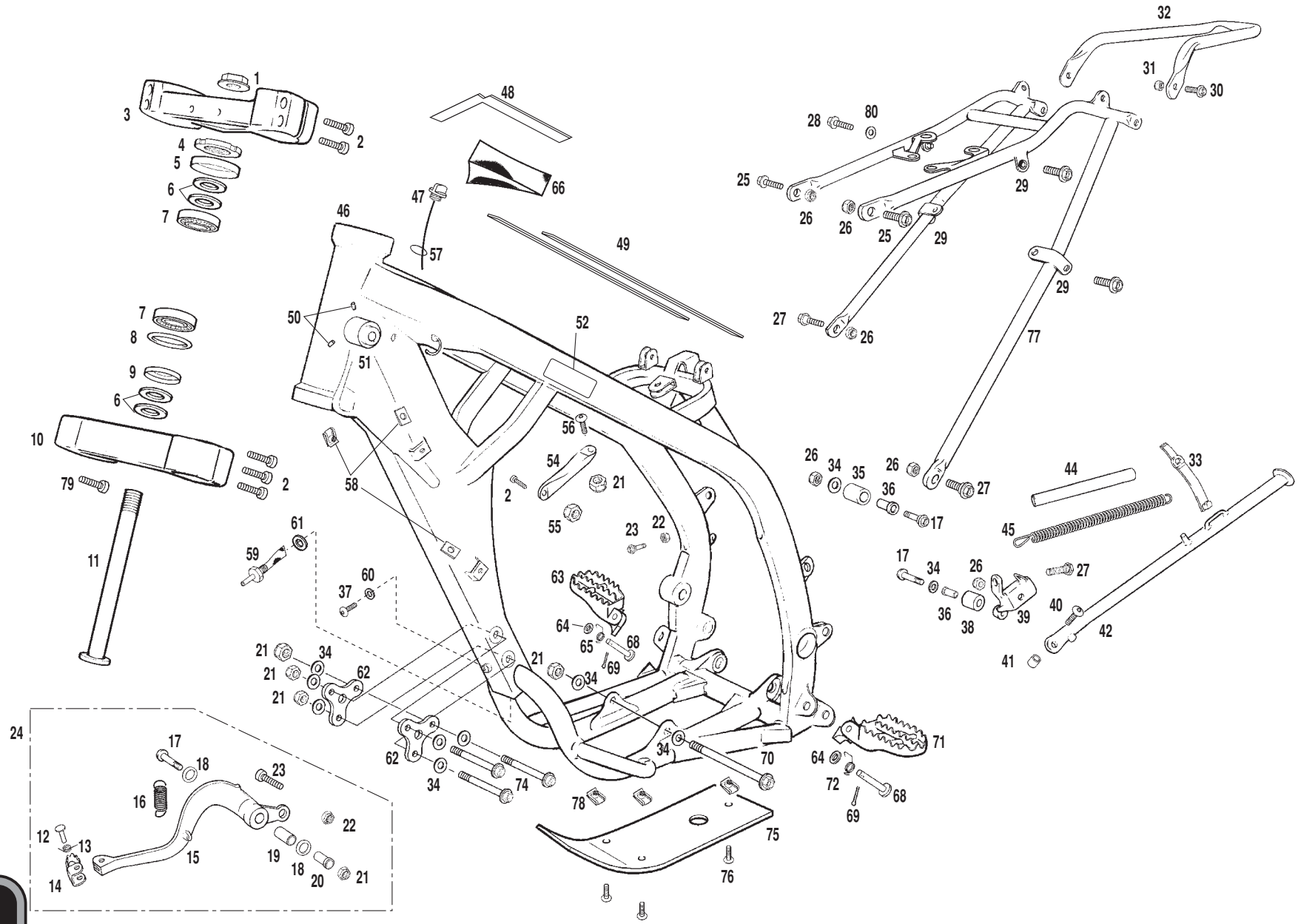
1
2
3
4
5
6
7
8
9
10
11
12
13
14
15
16
17
18
19
20
21
22
23
24
25
26
27
28
29
30
31
32
33
34
35
36
37
38
39
40
41
42
44
45
46
47
48
49
50
51
52
54
55
56
57
58
59
60
61
62
63
64
65
66
68
69
70
71
72
74
75
76
77
78
79
80

Nº	DESCRIPCION / *DESCRIPTION*	EC FSE 2004	SM FSE 2004	Cant.
33	GOMA SUJECCIÓN CDI / *CDI HOLDER RUBBER*	BE250034100		1
34	ARANDELA 8X20X1,5 / *8X20X1,5 WASHER*	T4008020		17
35	RODILLO GUÍA CADENA SUPERIOR / *UPPER CHAIN ROLL*	BE25610014		1
36	CASQUILLO RODILLO ,25X12X25 / *6,25X12X25 BUSHING*	BE25612016		2
37	TORNILLO ESPECIAL 6X14 / *6X14 SPECIAL SCREW*	T0206014		1
38	RODILLO GUÍA CADENA 13,5X32X23,5 / *13,5X32X23,5 LOWER CHAIN ROLL*	BE25610032		1
39	SOPORTE CABALLETE / *SIDE STAND HOLDER*	BE250212023		1
40	ULS 8X30 / *8X30 ULS BOLT*	T0508030		1
41	CASQUILLO CABALLETE / *SIDE STAND BUSHING*	BE250112011		1
42	CABALLETE / *SIDE STAND BRACKET*	BE250112010	BFS400212010SM	1
44	TUBO PLÁSTICO PROTECCION MUELLE / *SPRING PLASTIC TUBE COVER*	BT27912050		1
45	MUELLE CABALLETE / *SIDE STAND BRACKET SPRING*	BE25610039		1
46	CHASIS ENDURO 2004 4T / *2004 4T EC FRAME*	BFS450410000		1
47	TAPÓN DEPÓSITO ACEITE / *OIL TANK CAP*	BFS400110079		1
48	TIRA ADHESIVA ESPUMA 17 CM. / *17CM. FOAM STICKER*	BFS400138019		1
49	TIRA ADHESIVA ESPUMA 26 CM. / *26CM. FOAM STICKER*	BE25638018		2
50	CTO. REMACHE ANTIROBO / *STEERING LOCK RIVET SET*	BE250010076		1
51	ANTI-ROBO / *STEERING LOCK*	BE250010075		1
52	AD. TRANSPARENTE Nº BASTIDOR / *FRAME NUMBER CLEAR STICKER*	PU000138015		1
54	TIRANTE CULATA / *CYLINDER HEAD BRACE*	BFS400310050		1
55	TUERCA CON ARANDELA ESTRIADA / *NUT WITH WASHER*	T2208000		1
56	ULS 8X20 / *8X20 ULS BOLT*	T0508020		1
57	TORICA / *O'RING*	BFS400110082		1
58	TUERCA NUT M6 / *M6 NUT*	T2606000		4
59	RACORD CON FILTRO / *RACORD WITH FILTER*	BFS400132209		1
60	ARANDELA COBRE 6X10X1,5 / *6X10X1,5 WASHER*	BFS400132213		1
61	ARANDELA 18,2X24X1,5 / 18,2X24X1,5 WASHER	T4006008		1
62	SOPORTE MOTOR / *ENGINE SUPPORT*	BFS400110989		2
63	ESTRIBO DERECHO / *RIGHT FOOTREST*	BE250010002		1
64	ARANDELA / *WASHER*	T4001021		2
65	MUELLE ESTRIBO DERECHO / *RIGHT FOOTREST SPRING*	BE25610037		1
66	ESPUMA CHASIS / *FRAME FOAM*	BFS400132215		1

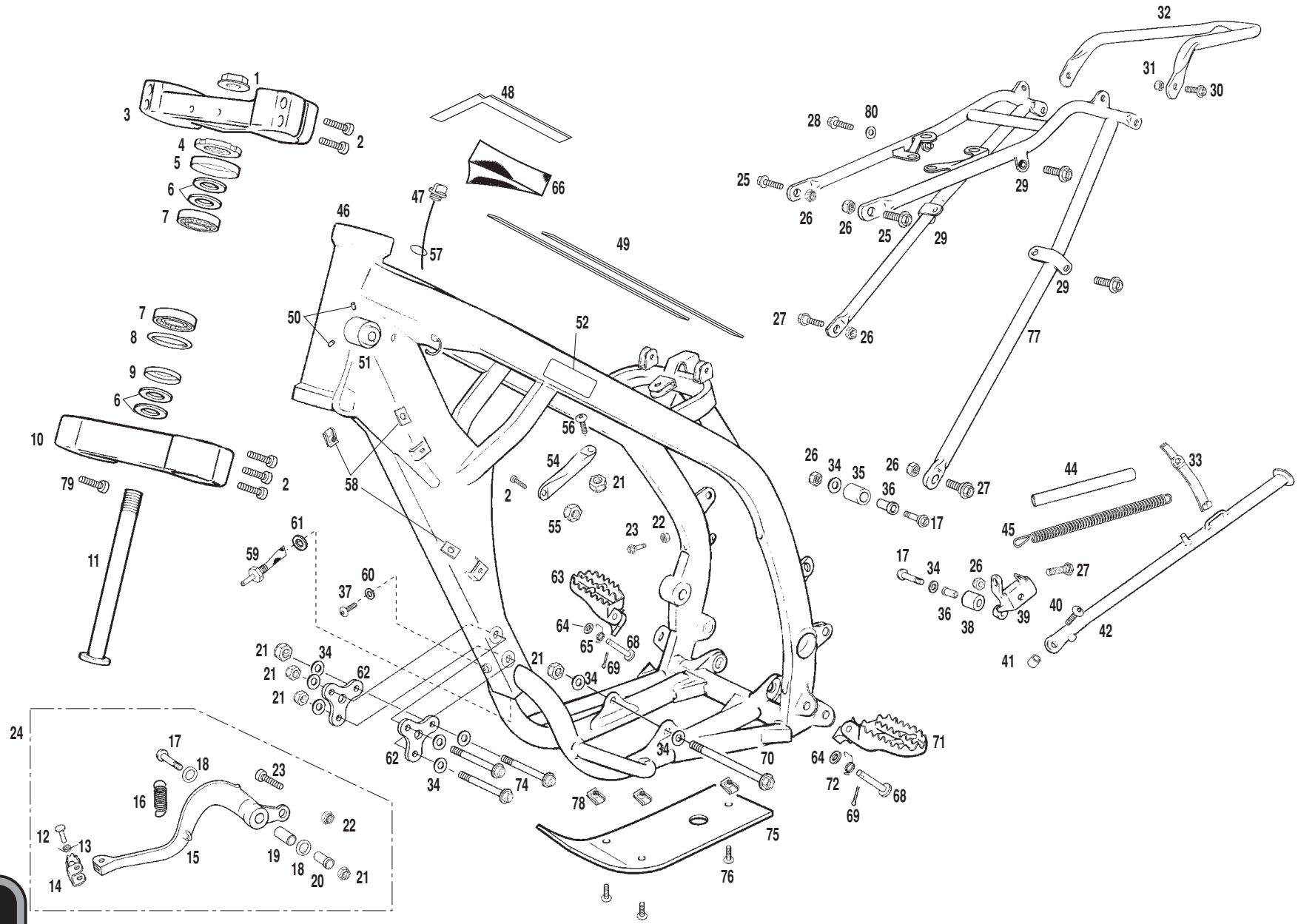
1
2
3
4
5
6
7
8
9
10
11
12
13
14
15
16
17
18
19
20
21
22
23
24
25
26
27
28
29
30
31
32
33
34
35
36
37
38
39
40
41
42
44
45
46
47
48
49
50
51
52
54
55
56
57
58
59
60
61
62
63
64
65
66
68
69
70
71
72
74
75
76
77
78
79
80

Nº	DESCRIPCION / *DESCRIPTION*	FSE 2004	Cant.
68	CASQUILLO ESTRIBO / *FOOTREST BUSHING*	BE25610006	2
69	CLAVILLA ZINC / *ZINC PIN*	BE25622022	2
70	TORNILLO ESPECIAL M8X103 / *8X103 SPECIAL SCREW*	T0208103	1
71	ESTRIBO IZQUIERDO / *LEFT FOOTREST*	BE250010003	1
72	MUELLE ESTRIBO IZQUIERDO / *LEFT FOOTREST SPRING*	BE25610038	1
74	TORNILLO ESPECIAL 8X108 / *8X108 SPECIAL SCREW*	T0208108	3
75	PROTECTOR CARTER / *CARTER PROTECTOR*	BFS400110930	1
76	ULS 8X16 / *8x16 ULS BOLT*	T0508016	3
77	COLA CHASIS / *FRAME TAIL*	BFS450410001	1
78	TUERCA NUT M8 RÁPIDA / *M8 FAST LOCK NUT*	BT280010041	3
79	ALLEN 8X16 / *8X16 ALLEN BOLT*	T0308016	2
80	ARANDELA 6X18X1,5 / *6X18X1,5 WASHER*	T4006018	1

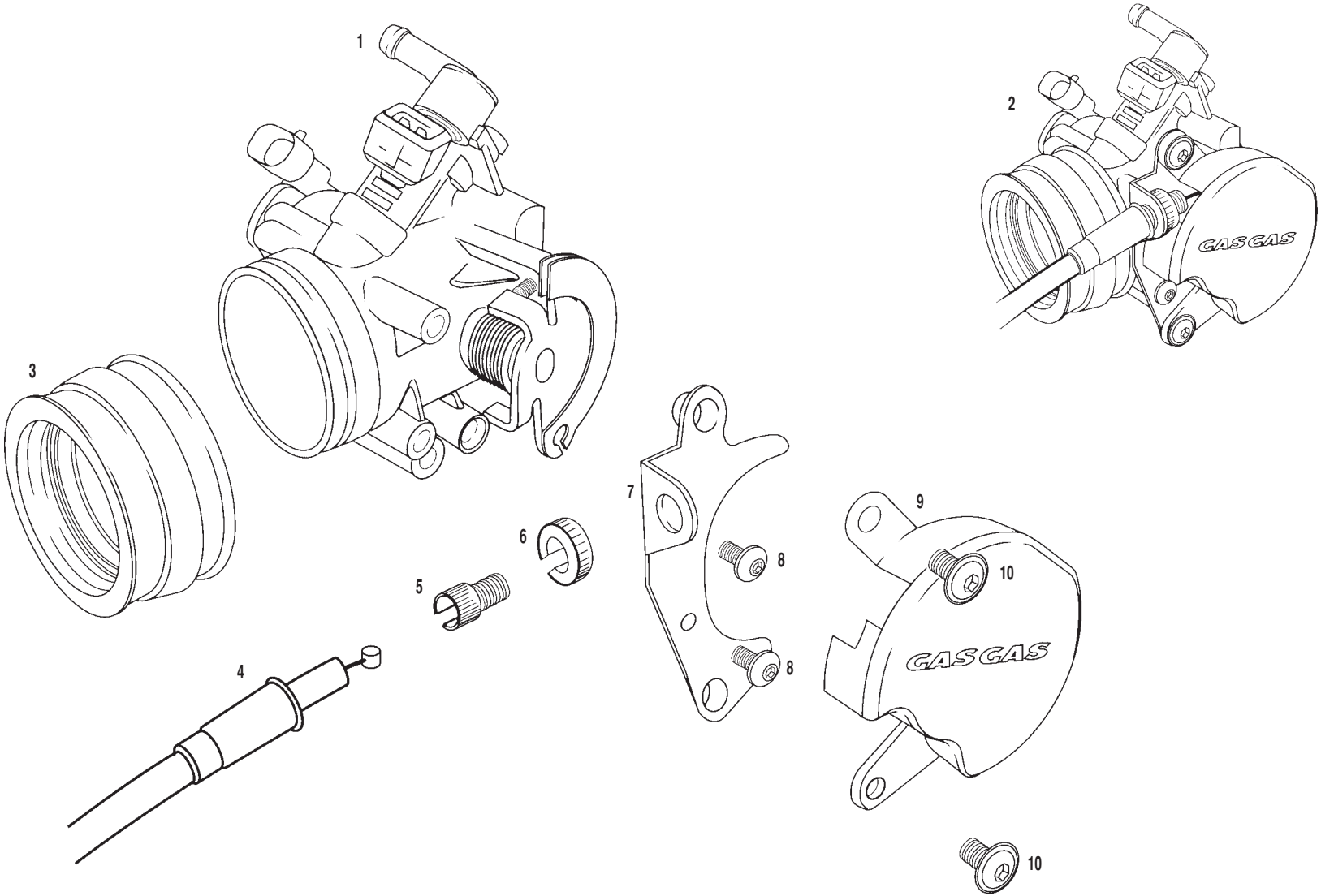
1
2
3
4
5
6
7
8
8
9
10
10
GAS GAS
GAS GAS

Nº	DESCRIPCION / *DESCRIPTION*	FSE 400	FSE 450	Cant.
1	INYECTOR FSE / *FSE INJECTOR*	MFS400180002	MFS4504180002	1
2	CTO. INYECTOR FSE / *FSE INJECTOR SET*	MFS400180000	MFS4504180000	1
3	TUBERA ADMISIÓN / *INTAKE RUBBER*	MFS400116131		1
4	CABLE GAS / *THROTTLE CABLE*	BFS400124008		1
5	TUERCA TENSOR CABLE GAS / *THROTTLE GAS TENSOR NUT*	BFS400124013		1
6	TENSOR CABLE GAS / *THROTTLE GAS TENSOR*	BFS400124012		1
7	SOPORTE CABLE GAS / *THROTTLE GAS SUPPORT*	BFS400124014		1
8	ULS 5X10 / *5X10 ULS BOLT*	T0505010		2
9	TAPA CABLE GAS / *THROTTLE GAS COVER*	MFS400180007		1
10	ULS 6X10 CON ARANDELA / *6X10 ULS BOLT WITH WASHER*	T0556010		2

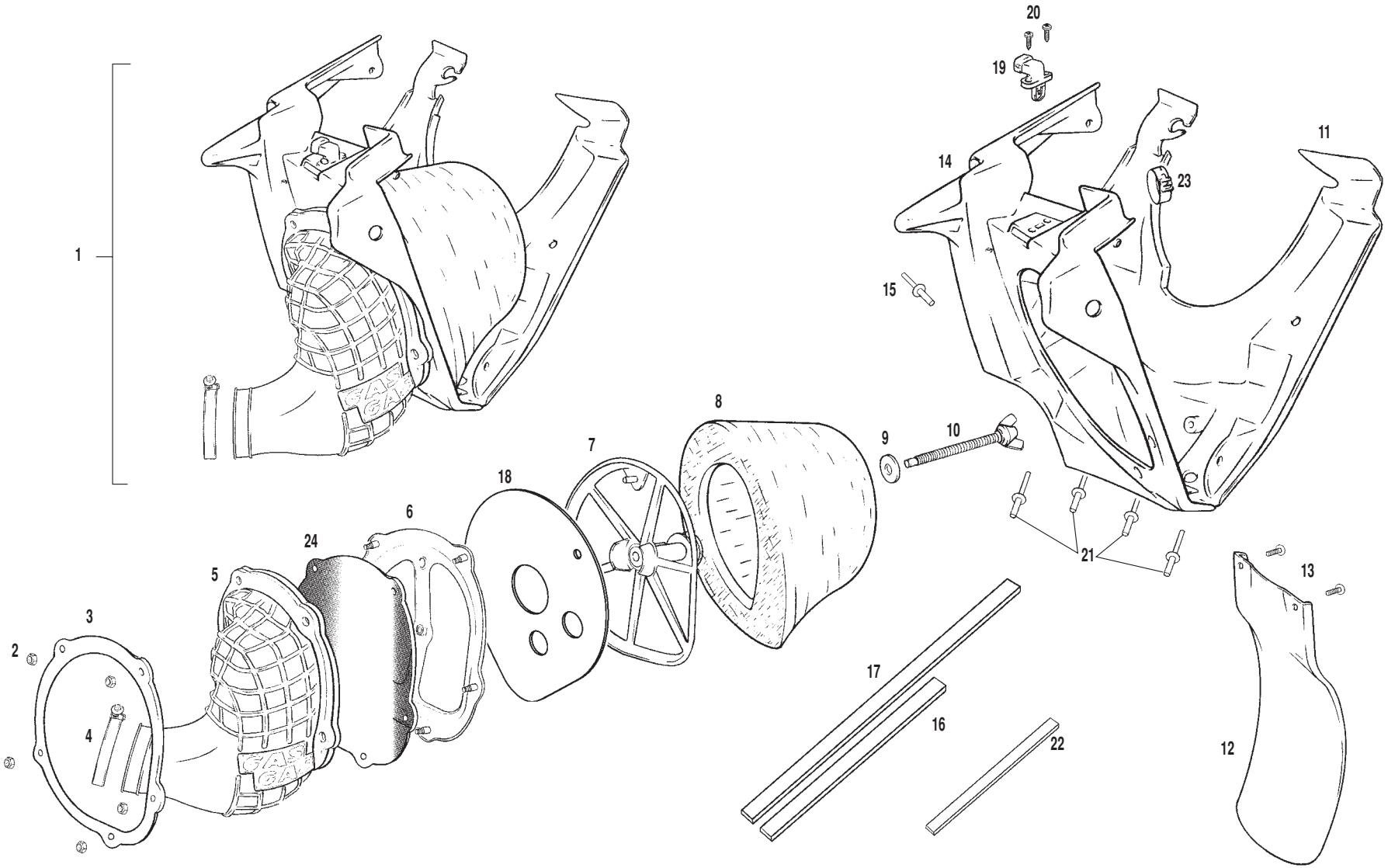
1
2
3
4
5
24
6
18
7
8
9
10
11
12
13
14
15
16
17
19
20
21
22
23

Nº	DESCRIPCION / *DESCRIPTION*	FSE 2004	Cant.
1	CTO. CAJA FILTRO / *AIR FILTER BOX SET*	BFS400228001	1
2	TUERCA M5 CON ARANDELA / *WASHER NUT M5*	T2205000	5
3	PLATINA SOPORTE JAULA FILTRO / *FILTER CARRIER SUPPORT*	BE25628021	1
4	ABRAZADERA 40-60 / *40-60 CLAMP*	L200047	2
5	GOMA TUBERA CAJA FILTRO / *AIR FILTER BOX RUBBER*	BFS400128017	1
6	PLATINA SOPORTE JAULA FILTRO INTERIOR / *INNER FILTER CARRIER SUPPORT*	BE25628020	1
7	JAULA FILTRO AIRE / *AIR FILTER CARRIER*	BE25628002	1
8	FILTRO AIRE / *AIR FILTER*	BE250128000	1
9	ARANDELA PLANA 6X16X1,5 / *6X16X1,5 PLAIN WASHER*	T4006016	1
10	VARILLA PALOM FILTRO / *FILTER BOLT*	BE25628003	1
11	SEMI-CAJA TUBERA FILTRO / *AIR FILTER SEMI-BOX*	BE250128015	1
12	PROTECTOR SUSPENSIÓN TRASERA / *REAR SHOCK ABSORBER PROTECTOR*	BE25620008	1
13	TORNILLO ESPECIAL 6X20 / *6X20 SPECIAL SCREW*	T0606020	2
14	SEMI-CAJA ESPUMA FILTRO / *AIR FILTER FOAM SEMI-BOX*	BE250128016	1
15	REMACHE 4X12 ALUMINIO / *ALUMINIUM RIVET RIVET*	T4504012	1
16	TIRA ADHESIVA 118 MM CAJA FILTRO / *118 MM. AIR FILTER BOX STICKER*	BE250128029	1
17	TIRA ADHESIVA 180 MM CAJA FILTRO / *180 MM. AIR FILTER BOX STICKER*	BE250128030	1
18	RESTRICTOR AIRE CAJA FILTRO / *FILTER BOX AIR RESTRICTOR*	BE2503 28014	1
19	SENSOR AIRE / *AIR SENSOR*	MFS400180003	1
20	TORNILLO 3X8 / *3X8 SCREW*	T1003009	2
21	REMACHE 4X18 NEGRO / *BLACK 4X18 RIVET*	T4504018	4
22	ESPUMA / *FOAM*	BE250328039	1
23	ABRAZADERA COBRA 21 / *21 CLAMP*	L200046	1
24	MALLA PROTECCION ESPUMA CAJA FILTRO 4T / *FILTER BOX PROTECTION NET*	BFS450428044	1

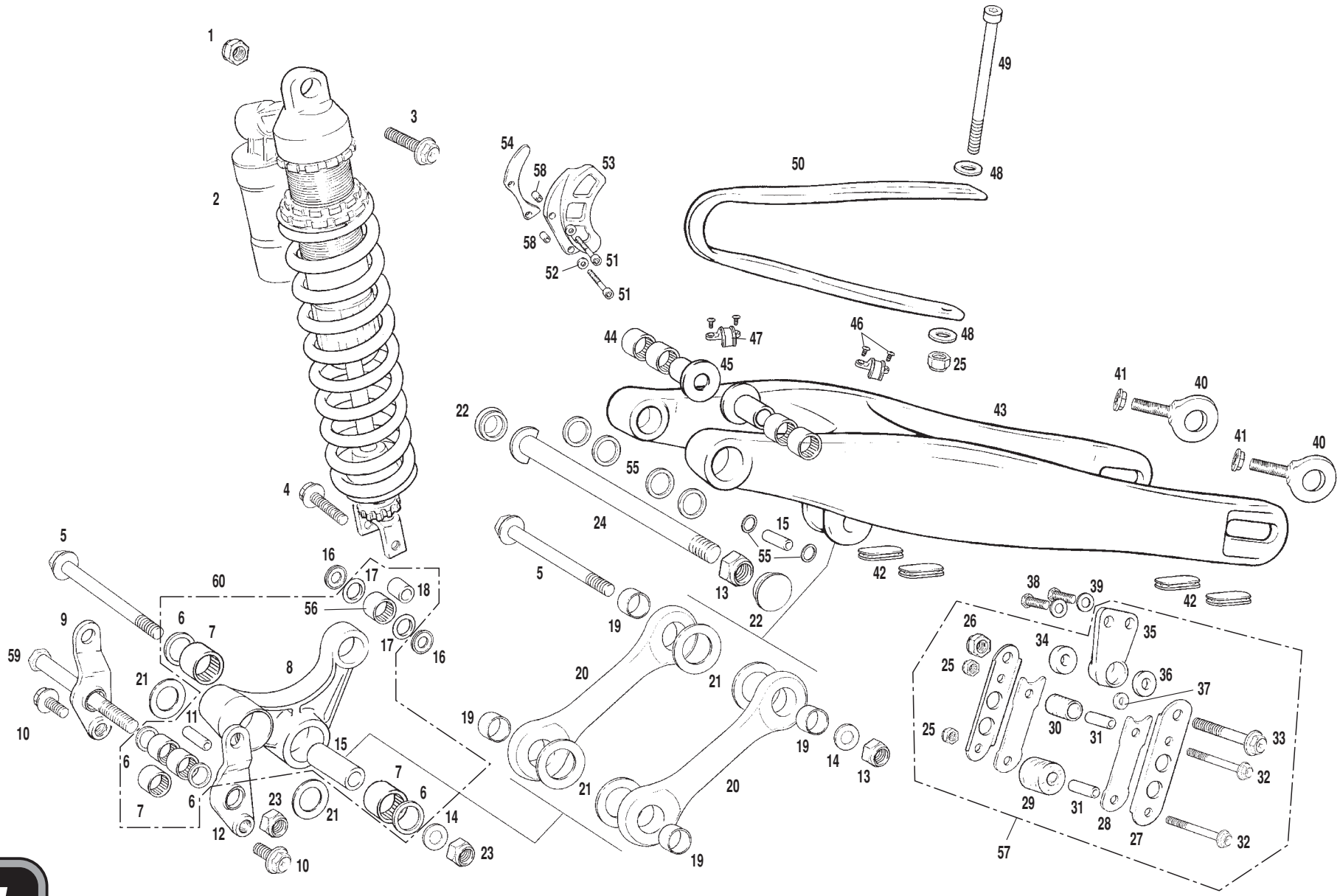
1
2
3
4
5
6
7
8
9
10
11
12
13
14
15
16
17
18
19
20
21
22
23
24
25
26
27
28
29
30
31
32
33
34
35
36
37
38
39
40
41
42
43
44
45
46
47
48
49
50
51
52
53
54
55
56
57
58
59
60

Nº	DESCRIPCION / *DESCRIPTION*	EC-FSE 2004	SM-FSE 2004	Cant.
1	TUERCA AUTOBLOCANTE M10 / *SELF-LOCKING NUT M10*	T2110001		1
2	AMORTIGUADOR TRASERO / *REAR SHOCK ABSORBER*	BFS400114004	BTL400214004	1
3	TORNILLO ESPECIAL M10X55 / *SPECIAL SCREW M10X55*	T0210055		1
4	TORNILLO M10X40X1,25 / *BOLT M10X40X1.25*	T0110042		1
5	TORNILLO ESPECIAL 14X95 / *SPECIAL SCREW 14X95*	T0201495		2
6	RETEN 28X22X4 BASCULANTE / *SWINGARM SEAL 28X22X4*	BE25610011		4
7	JAULA AGUJAS DL2216 / *NEEDLES BEARING DL2216*	BE25614010		5
8	BALANCIN / *ROCKER ARM*	BE25614005		1
9	SOPORTE BALANCIN DERECHO / *RIGHT ROCKER ARM SUPPORT*	BE250314006		1
10	TORNILLO ESPECIAL 12X25X1,25 / *SPECIAL SCREW 12X25X1.25*	T02012025		2
11	CASQUILLO EJE BASCULANTE / *SWINGARM SHAFT BUSHING*	BE25612005		1
12	SOPORTE BALANCIN IZQUIERDO / *LEFT ROCKER ARM SUPPORT*	BE250314007		1
13	TUERCA AUTOBLOCANTE M 14 / *SELF-LOCKING NUT M14*	BE25612009		4
14	ARANDELA 15X25X2,5 / *15X25X2.5 WASHER*	T4015025		2
15	CASQUILLO 14X22X57 / *14X22X57 BUSHING*	BE25612014		2
16	ARANDELA REGLAJE 21X10,2X1 / *21X10.2X1 SETTING WASHER*	T4001022		2
17	TORICA BIELETA 15X3,5 / *CONNECTING ROD O'RING*	BE25814015		2
18	CASQUILLO INF. AMORTIGUADOR D.16X21.60 / *SHOCK ABSORBER BUSHING (LOWER)*	BE25642005		1
19	CASQUILLO BIELETA / *CONNECTING ROD BUSHING*	BE25642002		4
20	BIELETA / *CONNECTING ROD*	BC250014008	BE120114008	2
21	ARANDELA REGLAJE 22,4X36X0,7 / *SETTING WASHER 22.4X36X0.7*	T4022036		6
22	TAPÓN BASCULANTE / *SWINGARM CAP*	BE25636001		2
23	TUERCA M14 AUTOBLOCANTE CON ARANDELA / *SELF-LOCKING M14 NUT WITH WASHER*	BE25612009		2
24	EJE BASCULANTE EC2003 / *EC2003 SWINGARM SHAFT*	BE250312008		1
25	TUERCA AUTOBLOCANTE M6 ALTA / *HIGH SELF LOCKING NUT M6*	T2106002		2
26	TUERCA AUTOBLOCANTE M8 BAJA / *LOW SELF LOCKING NUT M8*	T2108001		1
27	PLATINA GUIA CADENA / *CHAIN GUIDE BRACKET*	BE25912017		2
28	TIRA NYLON ANTIRUIDO / *ANTI-NOISE NYLON BAND*	BE25612022		2
29	RODILLO GUIA CADENA13,55X32X23,5 / *CHAIN GUIDE ROLLER 13.55X32X23.5*	BE25610032		1
30	RODILLO GUIA CADENA SUPERIOR / *UPPER CHAIN GUIDE ROLLER*	BE25610014		1
31	CASQUILLO GUIA CADENA / *CHAIN GUIDE BUSHING*	BE25610025		2
32	TORNILLO ESPECIAL 6X45 / *SPECIAL SCREW 6X45*	T0206045		2

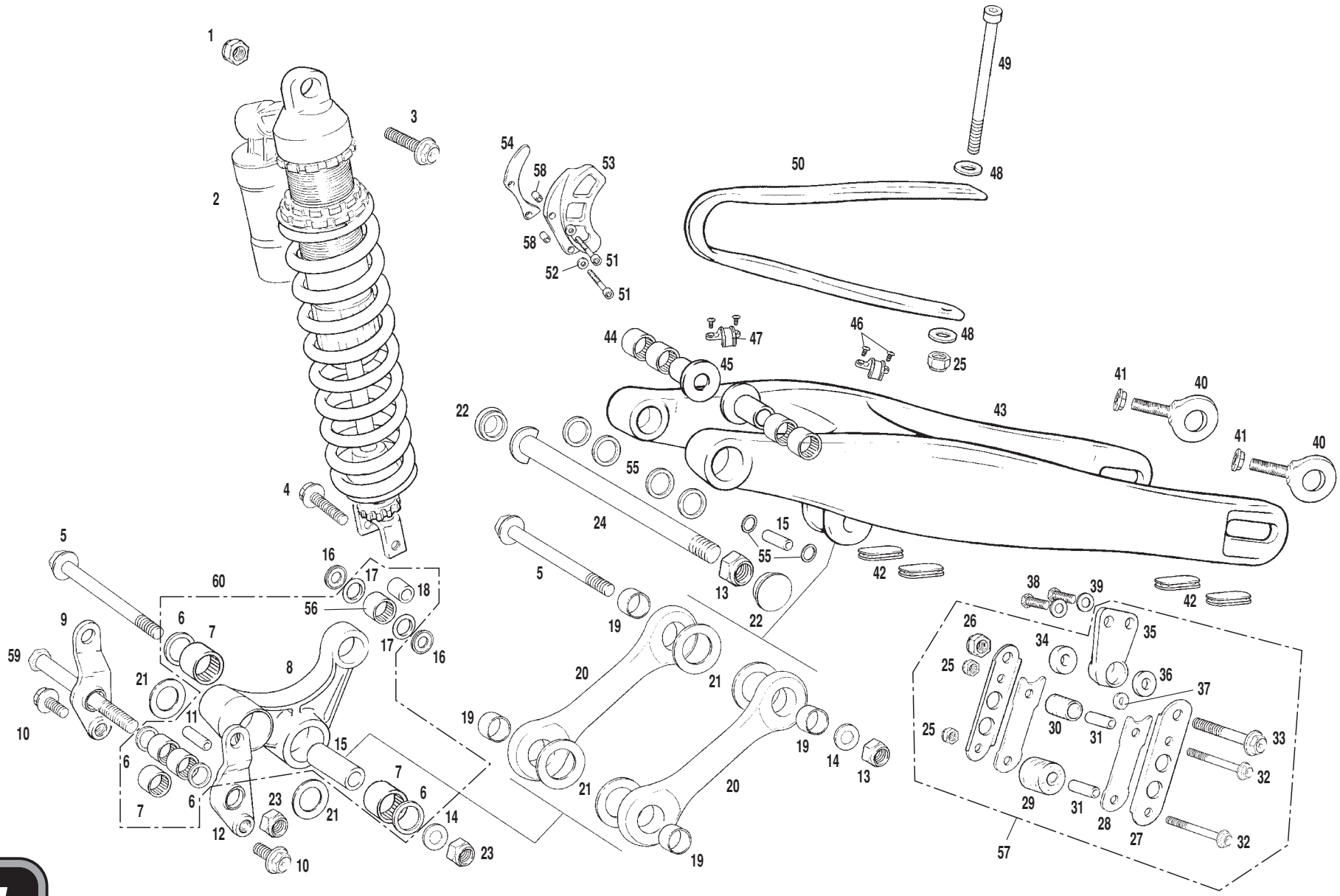
1
2
3
4
5
6
7
8
9
10
11
12
13
14
15
16
17
18
19
20
21
22
23
24
25
26
27
28
29
30
31
32
33
34
35
36
37
38
39
40
41
42
43
44
45
46
47
48
49
50
51
52
53
54
55
56
57
58
59
60

Nº	DESCRIPCION / *DESCRIPTION*	FSE 2004	Cant.
33	TORNILLO ESPECIAL 8X45 / *SPECIAL SCREW 8X45*	T0208045	1
34	DISTACIADOR SOP. GUIA CADENA GRANDE / *BIG CHAIN GUIDE SUPPORT SPACER*	BE25612021	1
35	SOPORTE GUIA CADENA / *CHAIN GUIDE SUPPORT*	BE25612018	1
36	DISTACIADOR SOP. GUIA CADENA PEQUEÑO / *SMALL CHAIN GUIDE SUPPORT SPACER*	BE25612020	1
37	SILENTBLOCK SOPORTE GUIA CADENA / *CHAIN GUIDE SUPPORT SILENBLOCK*	BE25612019	1
38	HEXAGONAL 8X20 / *HEX. BOLT 8X20*	T0108020	2
39	ARANDELA 8X16X1,5 / *WASHER 8X16X1.5*	T4008016	2
40	TENSOR RUEDA / *WHEEL TENSOR*	BE25818022	2
41	TUERCA CILINDRO ESPECIAL M10/150 / *M10/150 SPECIAL BOLT*	ME25616031	2
42	GOMA PROTECTOR BASCULANTE / *SWINGARM PROTECTOR RUBBER*	BE25836005	4
43	BASCULANTE / *SWINGARM*	BE250112002	1
44	JAULA AGUJAS HK2216 / *NEEDLES BEARING HK2216*	BE25614011	4
45	CASQUILLO BASCULANTE EC2003 / *EC2003 SWINGARM BUSHING*	BE250312007	2
46	ULS 5X12 / *ULS BOLT 5X12*	T0505012	4
47	SUJECCIÓN LATIGUILLO SOBRE BASCULANTE / *SWINGARM HOSE HOLDER*	BE25612006	2
48	ARANDELA 6X18X1,5 / *6X18X1.5 WASHER*	T4006018	2
49	ALLEN 6X75 / *ALLEN BOLT 6X75*	T0306075	1
50	PATIN CADENA / *CHAIN SLIDER*	BE250112015	1
51	ALLEN 6X45 / *ALLEN BOLT 6X45*	T0206045	2
52	ARANDELA PLANA 6X12X1,5 / *PLAIN WASHER 6X12X1.5*	T4006012	2
53	PROTECTOR PIÑON PLÁSTICO ENDURO / *ENDURO PLASTIC PINION PROT.*	ME250036121	1
54	PLATINA PROTECTOR PIÑON / *PINION PROTECTOR BRACKET*	ME25636021	1
55	RETEN 28X22X4 / *SEAL 28X22X4*	BE25610011	6
56	JAULA AGUJAS AL1216 / *AL 1216 NEEDLES BEARING*	BE25614009	1
57	CTO. TENSOR CADENA / *CHAIN TIGHTER SET*	BE25612018CT	1
58	CASQUILLO DISTANCIADOR PIÑÓN / *SPACER PINION BUSHING*	ME250036019	2
59	TORNILLO ESPECIAL M14X110 / *SPECIAL SCREW M14X110*	T0214110	1
60	BALANCIN COMPLETO EC / *EC ROCKER ARM SET*	BE25614005CT	1

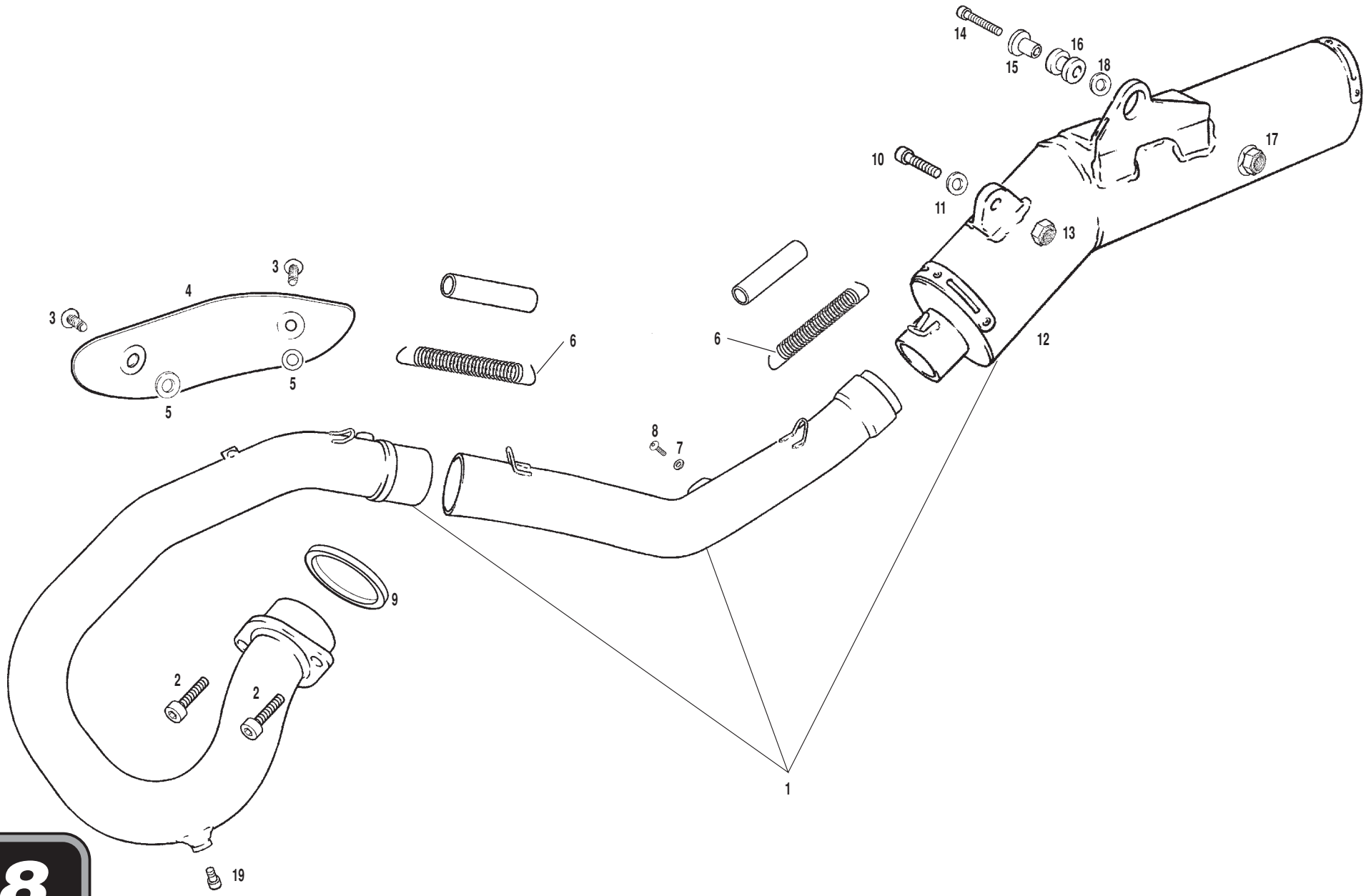
14
15
16
18
17
10
11
13
12
3
3
4
5
5
6
6
8
7
9
2
2
1
19

Nº	DESCRIPCION / *DESCRIPTION*	FSE 2004	Cant.
1	TUBO ESCAPE / *EXHAUST*	BFS400326001	1
2	ALLEN 8X20 / *8X20 ALLEN BOLT*	T0308020	2
3	ULS 6X10 / *6X10 ULS BOLT*	T0506010	2
4	PROTECTOR ESCAPE / *EXHAUST PROTECTOR*	BFS400126021	1
5	ARANDELA CLINGERIT 6x15x0.5 / *6x15x0.5 WASHER*	MFS400116407	2
6	MUELLE ESCAPE 4T / *FSE EXHAUST SPRING*	BFS400110042	1
7	ARANDELA 8X16X1,5 / *8X16X1,5 WASHER*	T4008016	1
8	ULS 8X16 / *8X16 ULS BOLT*	T0508016	1
9	JUNTA EC4T / *EXHAUST GASKET*	MFS400144012	1
10	ALLEN 8X25 / *8X25 ALLEN BOLT*	T0308025	1
11	ARANDELA 8X20X1,5 / *8X20X1,5 WASHER*	T4008020	1
12	SILENCIADOR TUBO ESCAPE / *EXHAUST SILENCER*	BFS400126002	1
13	TUERCA AUTOBLOCANTE M8 BAJA / *SELF-LOCKING NUT M8*	T2108001	1
14	ALLEN 8X50 / *8X50 ALLEN BOLT*	T0308050	1
15	CASQUILLO / *BUSHING*	BFS400126013	1
16	SILENTBLOCK / *SILENTBLOCK*	BE250026005	1
17	TUERCA CON ARANDELA / *NUT WITH WASHER*	T2208002	1
18	ARANDELA NEGRA / *BLACK WASHER*	BFS400126017	1
19	TAPON SENSOR Co / *SENSOR CAP*	BFS400126054	1

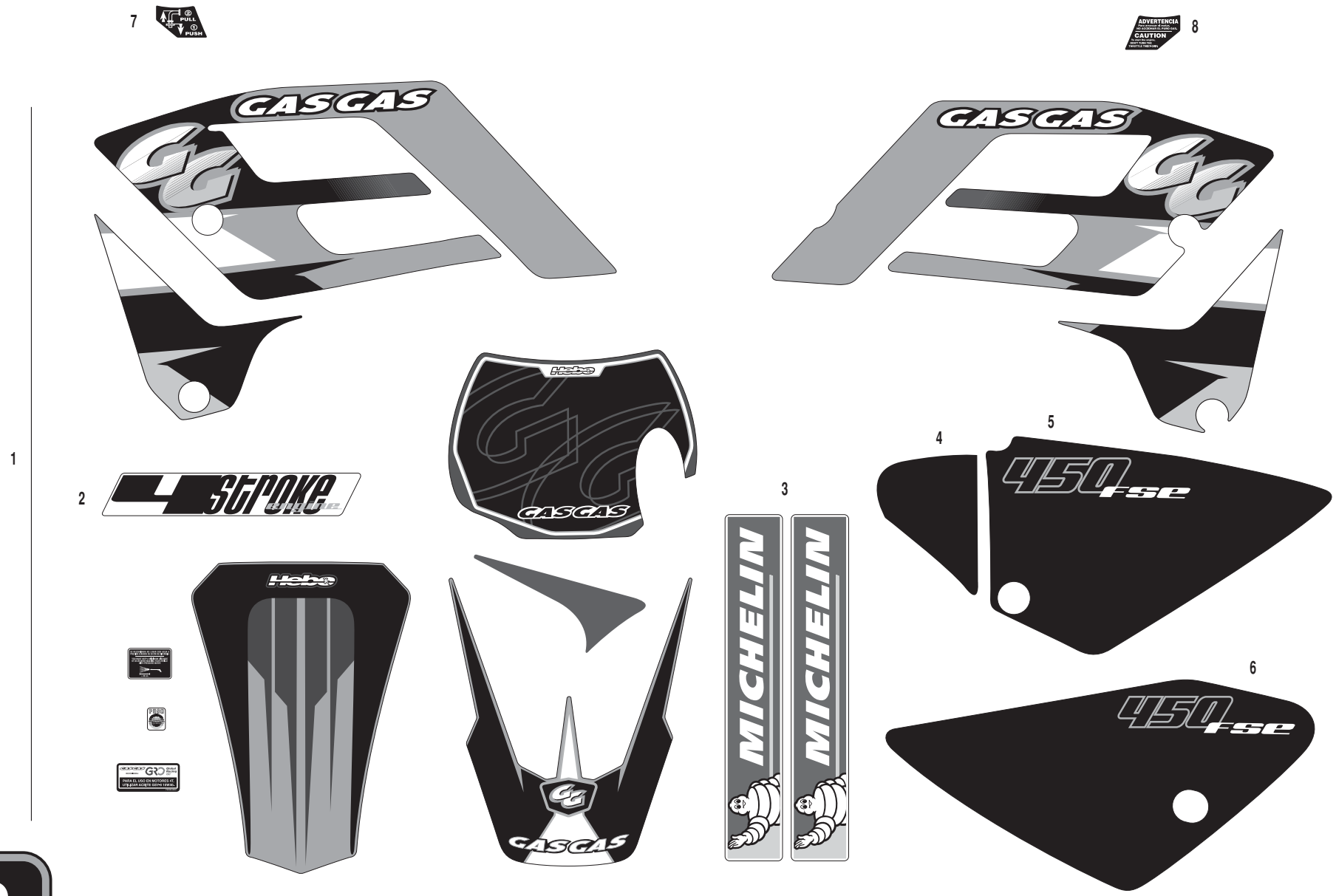
7
PULL
PUSH
8
ADVERTENCIA
CAUTION
1
GAS GAS
GAS GAS
2
4 STROKE
3
MICHELIN
MICHELIN
4
450 FSE
5
6
450 FSE
GAS GAS
GAS GAS

Nº	DESCRIPCION / *DESCRIPTION*	FSE 400	FSE 450	SM FSE 450	Cant.
1	CTO. ADH. FSE-2004 / *FSE -2004 STICKERS SET*	BFS400438000	BFS450438000	BFS450438000SM	1
2	ADH. 4T BASCULANTE / *4T STICKER ARM*		BFS450438005		2
3	ADH. MICHELIN HORQUILLA / *FRONT FORK MICHELIN STICKER*		PU000238006		2
4	ADH. TAPA FILTRO / *AIR FILTER COVER STICKER*		BE250438049		1
5	ADH. PORTANUMEROS LATERAL IZQUIERDO / *LEFT COVER STICKER*	BFS400438004	BFS450438004	BFS450438004SM	1
6	ADH. PORTANUMEROS LATERAL DERECHO / *RIGHT COVER STICKER*	BFS400438003	BFS450438003	BFS450438003SM	1
7	ADH. PUSH PULL 4T / *PUSH PULL 4T STICKER*		PU000338001		1
8	ADH. NO ACCIONAR EL GAS / *DON'T TWIST STICKER*		PU000238004		1

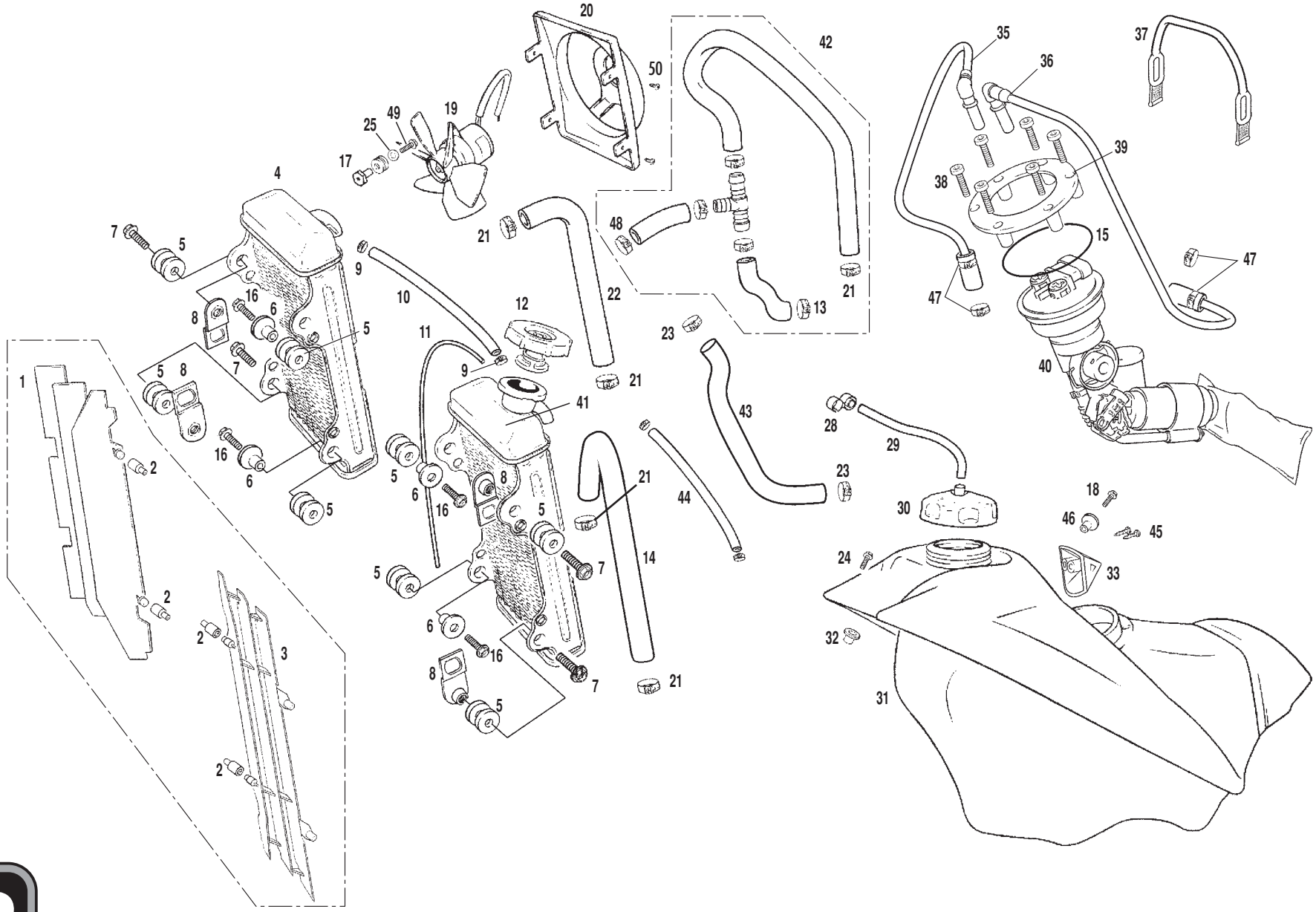
20
50
42
35
36
37
25
49
19
17
4
39
38
7
5
21
48
15
47
9
10
22
13
21
47
16
6
12
8
5
11
23
40
1
5
8
7
9
21
41
43
28
29
16
6
2
5
6
8
21
23
18
44
30
46
45
16
5
24
33
5
7
14
2
6
16
32
2
3
8
7
21
31
5
2

Nº	DESCRIPCION / *DESCRIPTION*	FSE 2004	Cant.
1	REJILLA RADIADOR DERECHO / *RIGHT RADIATOR RACK*	BE25620001	1
2	TOPE REJILLA RADIADOR / *RADIATOR RACK END*	BE25620101	4
3	REJILLA RADIADOR IZQUIERDO / *LEFT RADIATOR RACK*	BE25620002	1
4	RADIADOR DERECHO / *RIGHT RADIATOR*	BFS400132000	1
5	SILENTBLOCK RADIADOR / *RADIATOR SILENTBLOCK*	BE250026005	8
6	CASQUILLO RADIADOR / *RADIATOR BUSHING*	BE25832040	4
7	TORNILLO ESPECIAL 6X16 / *6X16 SPECIAL SCREW*	T0206016	4
8	PLASTICO LATERAL RADIADOR / *RADIATOR PROTECTOR*	BE25632015	4
9	ABRAZADERA COBRA 12/8 W4 CONDUCTO ACEITE / *OIL PIPE COBRA CLAMP*	MFS400110031	2
10	TUBO UNION RADIADORES / *RADIATOR CONNECTOR*	BFS400132008	1
11	TUBO SOBRANTE RADIADOR / *RADIATOR BREATHE HOSE*	BFS400110116	1
12	TAPON RADIADOR / *RADIATOR TAP*	BFS400132032	1
13	ABRAZADERA COBRA 25 / *25 CLAMP*	BE120132052	1
14	TUBO RADIADOR-CULATA SUPERIOR IZDO / *UPPER LEFT RAD. TO CYL. HEAD HOSE*	BFS400132002	1
15	TORICA BOMBA INYECCION / *INJECTION PUMP O'RING*	MFS400180105	1
16	ALLEN 6X20 / *6X20 ALLEN BOLT*	T0306020	4
17	CASQUILLO VENTILADOR / *FAN BUSHING*	L300016	3
18	ULS 5X16 / *5X16 ULS BOLT*	T0505016	1
19	VENTILADOR / *FAN*	L300001	1
20	PROTECTOR VENTILADOR / *FAN PROTECTOR*	L300011	1
21	ABRAZADERA COBRA 21 / *21 CLAMP*	L200046	4
22	TUBO RADIADOR-CULATA SUPERIOR DRCHO. / *UPPER RIGHT RAD. TO CYL. HEAD HOSE*	BFS400132012	1
23	ABRAZADERA 19 / *19 CLAMP*	L200043	2
24	TORNILLO ESPECIAL 6X20 / *6X20 SPECIAL SCREW*	T0206020	1
25	ARANDELA 4X12X1,5 / *4X12X1,5 WASHER*	T4004012	3
28	SOPORTE TUBO DESVAPORIZADOR / *STEAM HOSE HOLDER*	P720005	1
29	TUBO DESVAPORIZADOR TAPON GASOLINA / *FUEL HOSE TO PUMP*	BE25620011	1
30	TAPON DEPOSITO GASOLINA / *FUEL TANK CAP*	BE250020010	1
31	DEPOSITO / *FUEL TANK*	BFS400110024	1
32	CASQUILLO DEPOSITO / *FUEL TANK BUSHING*	BE250010007	1
33	SOPORTE ASIENTO DELANTERO / *FRONT SEAT SUPPORT*	BFS450310007	1
35	TUBO COMBUSTIBLE INYECCIÓN IZQUIERDO / *LEFT FUEL INJECTION HOSE*	MFS450480101	1

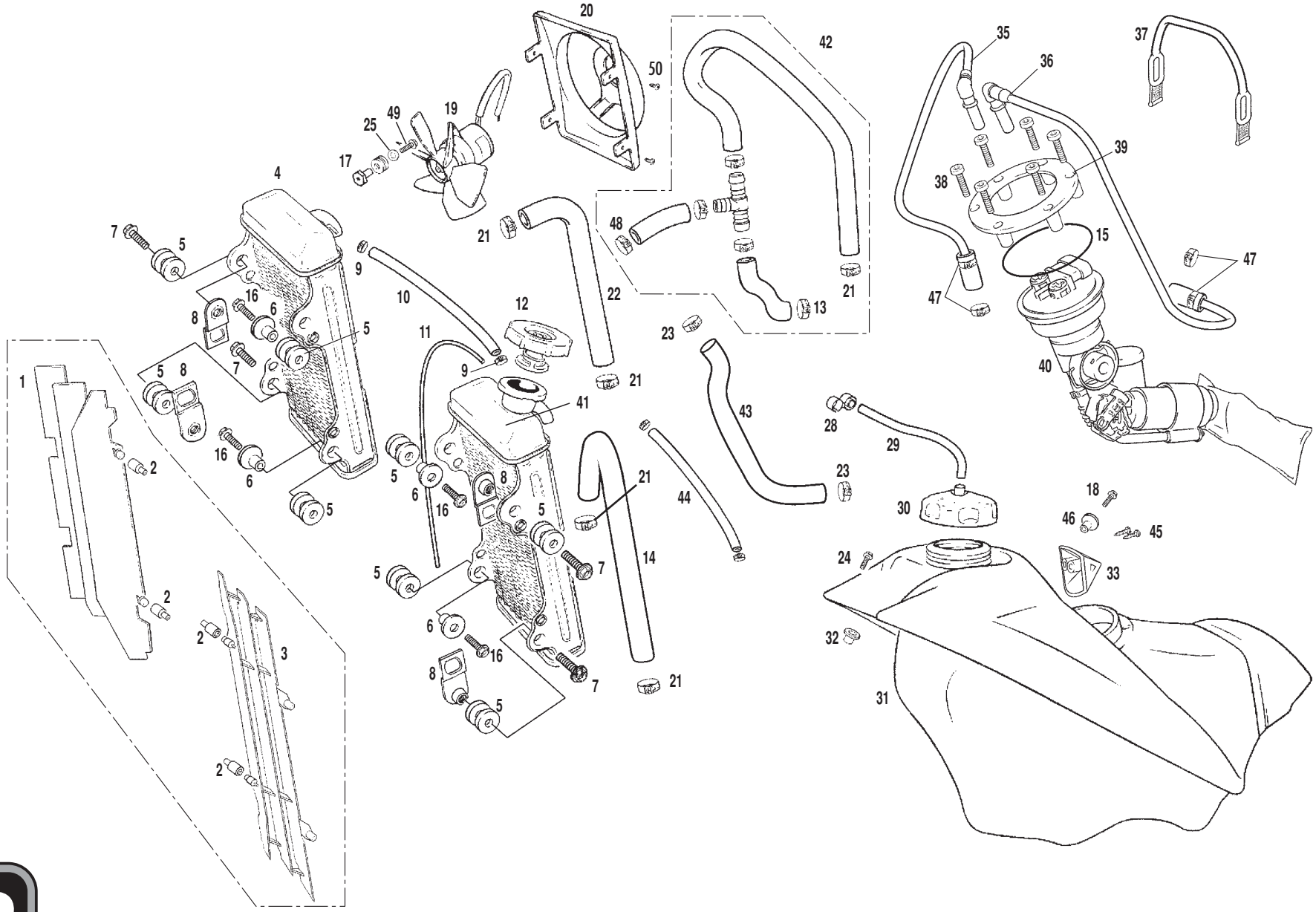
20
50
42
35
36
37
25
49
19
17
4
39
38
7
5
21
48
15
47
9
10
22
13
21
47
16
6
12
8
5
11
23
40
1
5
8
7
9
21
41
43
28
29
16
6
2
5
6
8
21
23
18
44
30
46
45
16
5
24
33
5
7
14
2
6
16
32
2
3
8
7
21
31
5
2

Nº	DESCRIPCION / *DESCRIPTION*	FSE 2004	Cant.
36	TUBO COMBUSTIBLE INYECCIÓN DERECHO / *RIGHT FUEL INJECTION HOSE*	MFS4504180102	1
37	TIRA SUJ. DEPOSITO EC 2001 / *FUEL TANK RUBBER BAND HOLDER*	BE250136020	1
38	ALLEN 5X25 / *5X25 ALLEN BOLT*	T0305025	6
39	TAPA BOMBA INYECCION / *INJECTION PUMP COVER*	MFS400180106	1
40	BOMBA GASOLINA / *FUEL PUMP*	MFS400180100	1
41	RADIADOR IZQUIERDO / *LEFT RADIATOR*	BFS400132001	1
42	CTO. TUBOS RADIADOR A BOMBA AGUA / *RADIATOR TO WATER PUMP HOSE*	BFS400132020/2	1
43	TUBO DESVAPORIZADOR CULATA / *CYL. HEAD DESVAP. HOSE*	MFS450416103	1
44	TUBO DESVAPORIZADOR CHASIS EC400-4T / *FRAME DESVAP. HOSE*	BFS450432019	1
45	ALLEN 5X15 / *5X15 ALLEN BOLT*	T0305015	2
46	CASQUILLO INFERIOR SUJECCIÓN RADIADOR / *INFERIOR RADIATOR BUSHING*	BE25832040	1
47	ABRAZADERA D.12.9-13.6 AMARILLA / *12.9-13.6 YELLOW CLAMP*	BE250210047	4
48	ABRAZADERA 22 / *22 CLAMP*	L200038	1
49	TORNILLO HEXAGONAL 4X10 / *4X10 HEXAGONAL BOLT*	T0104010	3
50	TORNILLO ROSCA-CHAPA 3X9 / *3X9 SCREW*	T1003009	4

Rueda delantera / Front wheel

GAS GAS

FSE 2004

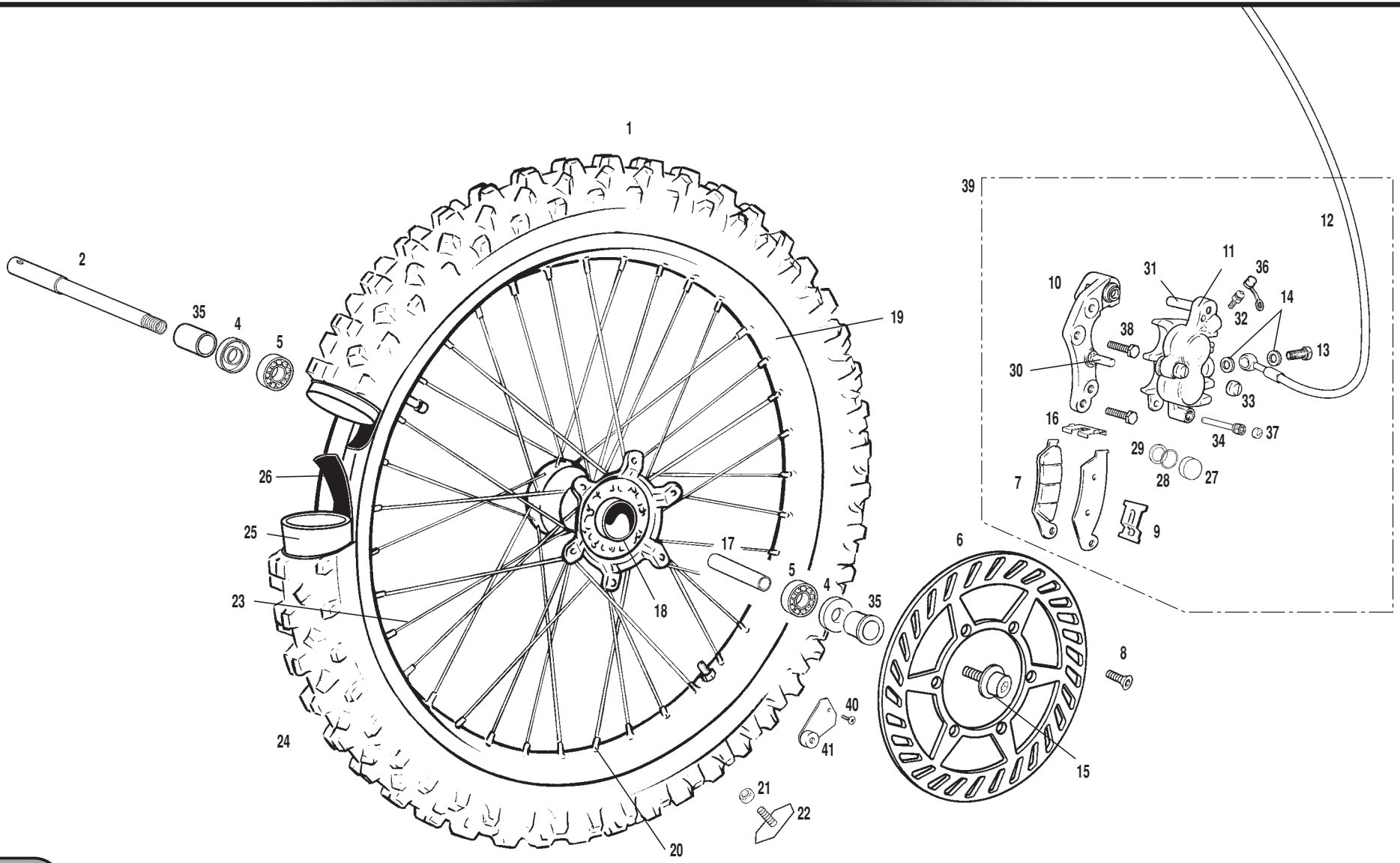

Nº	DESCRIPCION / *DESCRIPTION*	FSE2004	Cant.
1	RUEDA DELANTERA / *FRONT WHEEL*	BE250318000	1
2	EJE RUEDA DELANTERA / *FRONT WHEEL AXIS*	BC250418017	1
4	RETEN RUEDA DELANTERA / *FRONT WHEEL GASKET*		2
5	COJINETE 6905 2RSR / *BEARING*	ME120136055	2
6	DISCO FRENO DELANTERO / *FRONT BRAKE DISC*	BE250222011	1
7	PASTILLAS DE FRENO DELANTERO / *FRONT BRAKE PADS*	BE250022065	1
8	HEXAGONAL 6X16 / *HEXAGONAL BOLT 6X16*	BE250018029	6
9	PLATINA (A) SUJ. PASTILLAS DEL. / *FRONT BRAKE PADS HOLDER BRACKET (A)*	BE250022063	1
10	SOPORTE PINZA DELANTERO / *FRONT CALIPER SUPPORT*	BE250022110	1
11	PINZA FRENO DELANT. / *FRONT BRAKE CALIPER*	BE250322000	1
12	LATIGUILLO FRENO DELANTERO / *FRONT BRAKE HOSE*	BE250022002	1
13	RACORD SUJ. LATIGUILLO 10X1,25 / *HOSE HOLDER RACORD 10X1.25*	BC25722006	1
14	ARANDELA LATIGUILLO 10X14X1 / *HOSE WASHER 10X14X1*	BE25622007	2
15	TORNILLO EJE RUEDA DELANTERA / *FRONT WHEEL AXIS BOLT*	BT280418026	1
16	PLATINA (B) SUJ. PASTILLAS DELANT. / *FRONT BRAKE PADS HOLDER BRACKET (B)*	BE250022064	1
17	DISTANCIADOR / *SPACER*		1
18	CUBO RUEDA DELANTERO SEP. INT. ALUM. / *FRONT WHEEL HUB*	BC250018007	1
19	LLANTA 1,60X21 / *RIM 1.60X21*	BE250118006	1
20	TUERCA RADIO DELANTERO / *FRONT SPOKE NUT*	BE250218010	36
21	TUERCA CON ARANDELA ESTRIADA M8 / *NUT WITH LOCK WASHER M8*	BE25818060	1
22	AGARRE CUBIERTA DELANTERA / *FRONT TIRE HOLDER*	R120000	1
23	RADIO DELANTERO 243X3,5 / *FRONT SPOKE 243X3.5*	BE250218009	36
24	NEUMÁTICO DELANTERO 90/90-21 / *FRONT TIRE 90/90-21*	BE25618102	1
25	CÁMARA DELANTERA / *FRONT AIR HOSE*	BE25618001	1
26	PROTECTOR BANDA DELANTERA / *FRONT RIM BAND*	BE25618028	1
27	PISTÓN COMP. PINZA FRENO DELANTERO / *FRONT BRAKE CALIPER PISTON*	BE250022042	4
28	TORICA PISTÓN PINZA FRENO DELANTERO / *FRONT BRAKE CALIPER PISTON O'RING*	BE250022032	4
29	RETÉN PINZA FRENO DELANTERO / *FRONT BRAKE CALIPER SEAL*	BE250022033	4
30	TORNILLO CLAVIJA PINZA FRENO DELANTERO / *FRONT BRAKE CALIPER BOLT*	BE250022034	1
31	TORNILLO CLAVIJA A PINZA FRENO DELANTERO / *FRONT BRAKE TO CALIPER BOLT*	BE250022043	1
32	SANGRADOR PINZA FRENO DELANTERO / *FRONT BRAKE CALIPER BLEEDER*	BE250022038	1
33	PROTEC. TORNILLO PINZA FRENO DEL. / *FRONT BRAKE CALIPER BOLT PROT.*	BE250022039	1

Rueda delantera / Front wheel

GAS GAS

FSE 2004

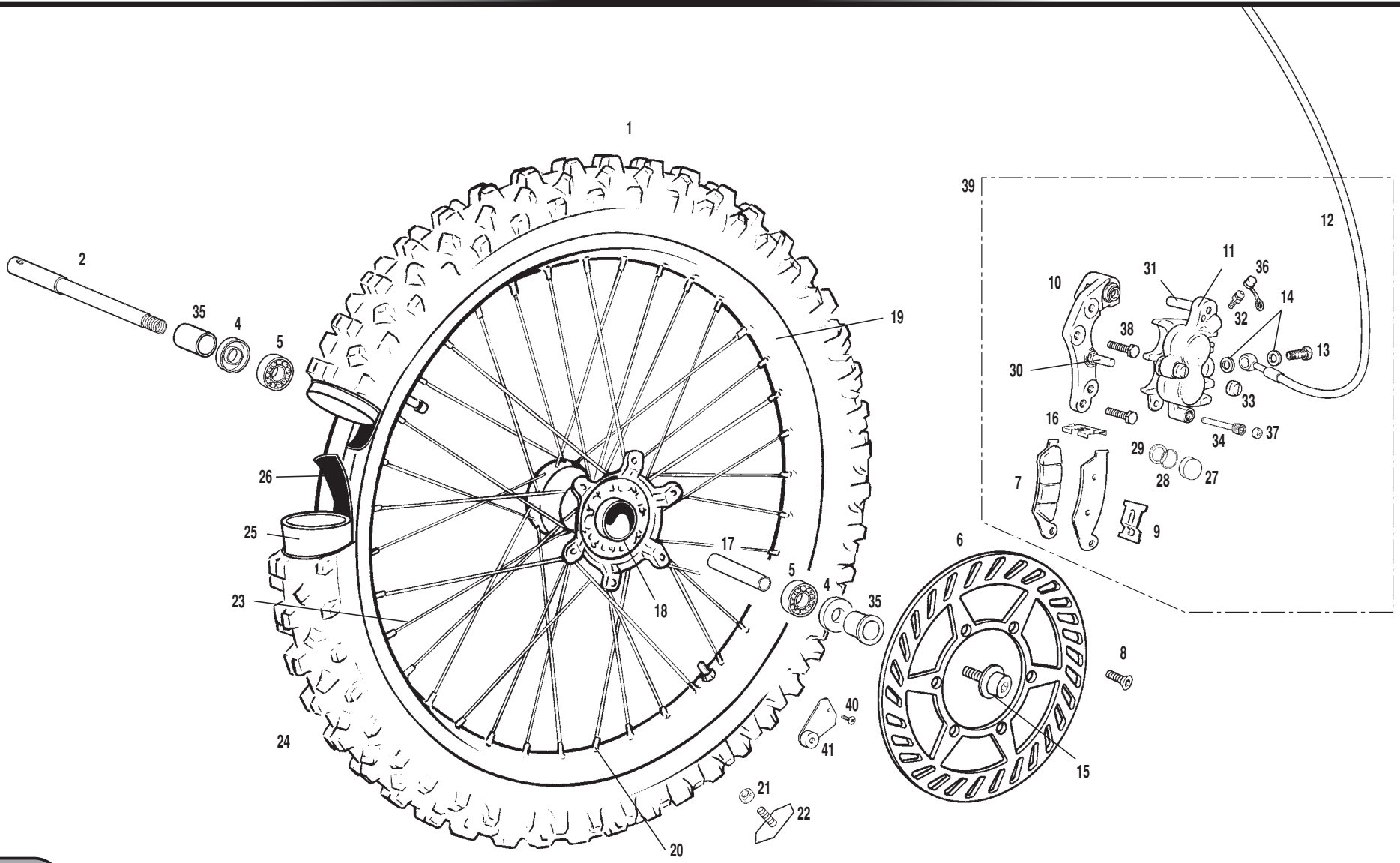

Nº	DESCRIPCION / *DESCRIPTION*	FSE2004	Cant.
34	PASADOR PASTILLAS PINZA FRENO DELANTERO / *FRONT BRAKE PADS PIN*	BE250022041	1
35	CASQUILLO RUEDA DELANTERA / *FRONT WHEEL BUSHING*	BC250418019	2
36	TAPÓN SANGRADOR / *BLEEDER CAP*	BE250022055	1
37	PROTECCION PASADOR NISSIN / *NISSIN PROTECTOR PIN*	BE250022095	1
38	TORNILLO ESPECIAL 8X30 / *SPECIAL SCREW 8X45*	T0208030	2
39	CTO. FRENO DELANTERO / *FRONT BRAKE SET*	BE250322108C	1
40	ULS 3X10 NEGRO CON ARANDELA / *BLACK 3X10 ULS WITH WASHER*	T0323010	1
41	CTO. SOPORTE CON IMAN C.K. / *SUPPORT WITH MAGNET SET*	BE250334008	1

Rueda delantera / Front wheel

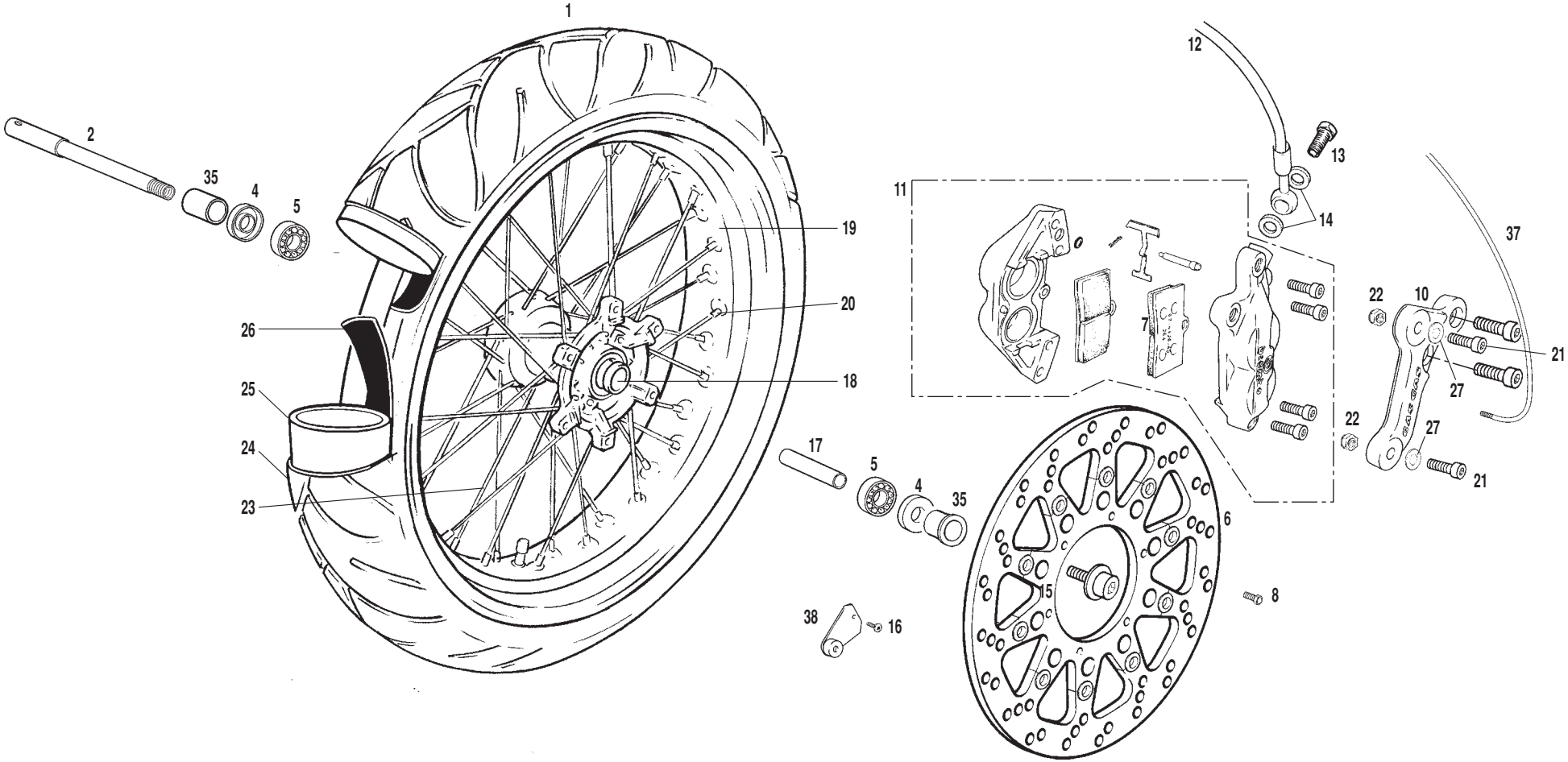

Nº	DESCRIPCION / *DESCRIPTION*	SM	Cant.
1	RUEDA DELANTERA SM / *SM FRONT WHEEL*	BE250118000SM	1
2	EJE RUEDA DELANTERA / *FRONT WHEEL AXIS*	BC250418017	1
4	RETEN RUEDA DELANTERA / *FRONT WHEEL GASKET*		2
5	COJINETE / *BEARING*	ME120136055	2
6	DISCO FRENO DELANTERO / *FRONT BRAKE DISC*	BE250122011SM	1
7	PASTILLAS DE FRENO DELANTERO / *FRONT BRAKE PADS*	BE250122065SM	1
8	HEXAGONAL 6X14 / *HEXAGONAL BOLT 6X14*	T020601412	6
10	SOPORTE PINZA DELANTERO / *FRONT CALIPER SUPPORT*	BE250122110SM	1
11	PINZA FRENO DELANTERO / *FRONT BRAKE CALIPER*	BE250122000SM	1
12	LATIGUILLO FRENO DELANTERO / *FRONT BRAKE HOSE*	BE250122002SM	1
13	RACORD SUJECCIÓN LATIGUILLO 10X1,25 / *HOSE HOLDER RACORD 10X1.25*	R320000	1
14	ARANDELA LATIGUILLO 10X14X2 / *HOSE WASHER 10X14X2*	BE25622057	2
15	TORNILLO EJE RUEDA DELANTERA / *FRONT WHEEL AXIS BOLT*	BT280418026	1
16	ULS 3X10 NEGRO CON ARANDELA / *BLACK 3X10 ULS WITH WASHER*	T0323010	1
17	DISTANCIADOR / *SPACER*		1
18	CUBO RUEDA DELANTERA SEP. INT. ALUMINIO / *FRONT WHEEL HUB*	BC250018007	1
19	LLANTA / *RIM*	BE250118006SM	1
20	TUERCA RADIO DELANTERO / *FRONT SPOKE NUT*	BT27718016	36
21	TORNILLO ESPECIAL 8X45 / *8X45 SPECIAL SCREW*	T0208045	2
22	TUERCA M8 AUTOBLOCANTE CON ARANDELA / *M8 SELF-LOCKING NUT WITH WASHER*	T2208002	2
23	RADIO DELANTERO 185X3,5 / *FRONT SPOKE 185X3.5*	BE250118009SM	36
24	NEUMÁTICO DELANTERO 120/60 ZR 17 / *FRONT TIRE*	BE2501180102SM	1
25	CÁMARA DELANTERA SUPERMOTARD / *SUPERMOTARD FRONT AIR HOSE*	BE250118001SM/2	1
26	PROTECTOR BANDA DELANTERA / *FRONT RIM BAND*	BE250118028SM	1
27	ARANDELA 8X16X1,5 / *8X16X1,5 WASHER*	T4008016	2
35	DISTANCIADOR RUEDA DELANTERA / *FRONT WHEEL SPACER*	BC250018019	2
37	CABLE MULTIFUNCION TT 2003 / *MULTIFUNCTION CABLE*	BE250334050	1
38	CTO. SOPORTE CON IMAN C.K. / *SUPPORT WITH C.K. MAGNET SET*	BE250334008	1

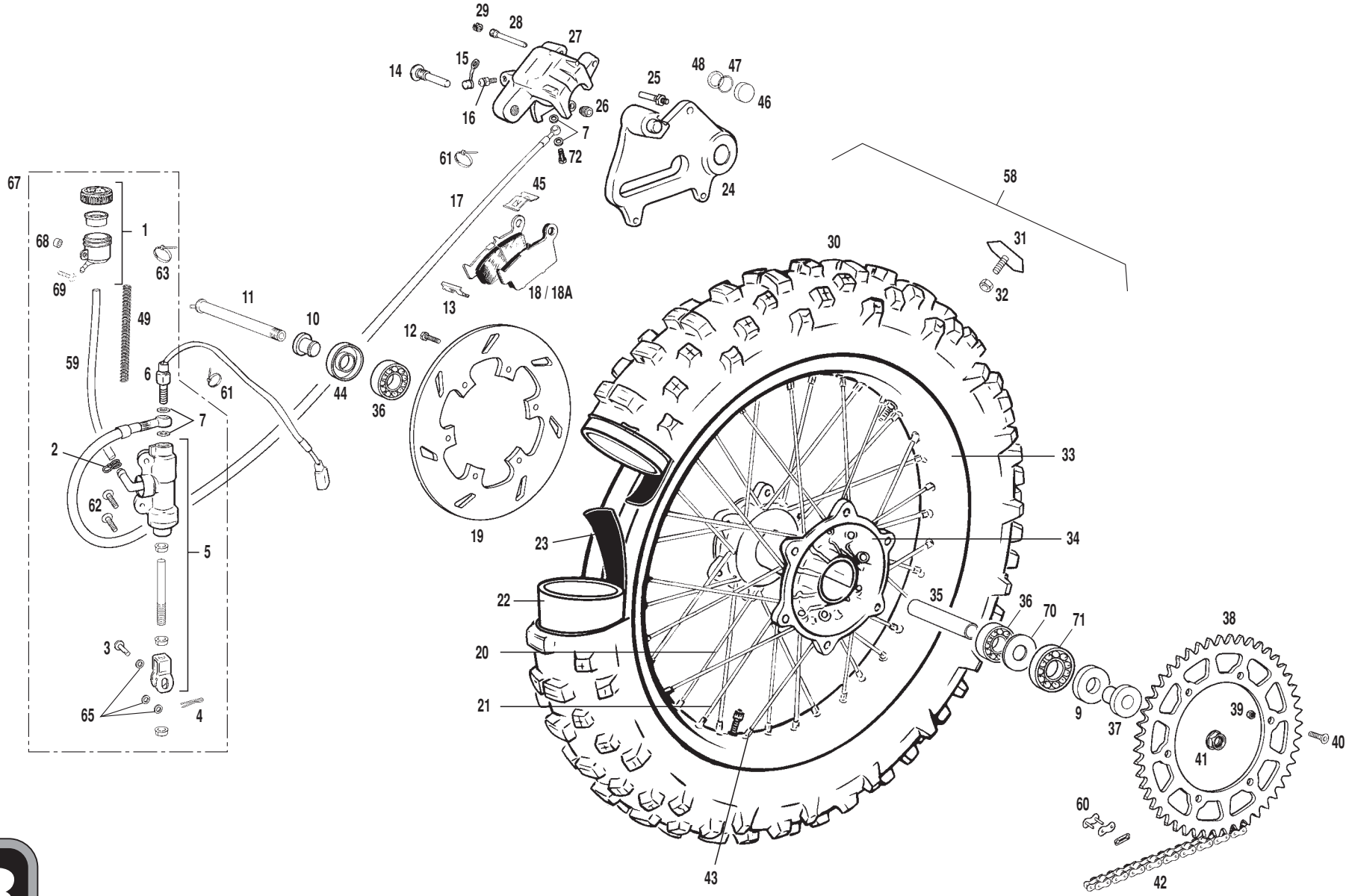
29
28
27
14
15
16
26
7
72
61
25
48
47
46
24
58
67
1
68
63
69
49
59
6
61
7
2
62
5
3
65
4
11
10
44
36
12
19
17
45
13
18 / 18A
30
31
32
33
34
23
22
20
21
35
36
70
71
9
37
38
39
41
40
60
42
43

Nº	DESCRIPCION / *DESCRIPTION*	FSE2004	Cant.
1	DEPÓSITO LÍQUIDO DE FRENOS / *BRAKE FLUID TANK*	BT280410016	1
2	ABRAZADERA MUELLE M-11.6 / *SPRING CLAMP M-11.6*	BE25610044	1
3	PASADOR 8X20 PEDAL FRENO / *BRAKE PEDAL PIN 8X20*	BE25622026	1
4	CLAVILLA PASADOR FRENO 2X20 / *BRAKE PEDAL PIN STOPPER*	BE25622027	1
5	BOMBA FRENO TRASERO NISSIN / *NISSIN REAR BRAKE PUMP*	BE25622010/2	1
6	INTERRUPTOR STOP BOMBA NISSIN / *NISSIN BRAKE PUMP STOP SWITCH*	BE250034003/2	1
7	ARANDELA LATIGUILLO 10X14X1 / *HOSE WASHER 10X14X1*	BE25622007	4
9	RETEN RUEDA TRASERA / *REAR WHEEL SEAL*	BE250318055	1
10	DISTANCIADOR RUEDA TRASERA CORTO / *SHORT REAR WHEEL SPACER*	BE250018025	1
11	EJE RUEDA TRASERA / *REAR WHEEL AXIS*	BE25618020	1
12	TORNILLO HEXAGONAL 6X16 DISCO TRAS. / *R. DISC BRAKE HEX. SCREW 6X16*	BE250018029	6
13	PLATINA (A) SUJ. PASTILLAS TRAS. / *REAR BRAKE PADS HOLDER BRACKET (A)*	BE250022090	1
14	TORNILLO SUJECCIÓN PINZA / *CALIPER HOLDER SCREW*	BE250022096	1
15	TAPÓN SANGRADOR / *BLEEDER CAP*	BE250022055	1
16	SANGRADOR / *BLEEDER*	BE250022060	1
17	LATIGUILLO FRENO TRASERO NISSIN / *NISSIN REAR BRAKE HOSE*	BE250022004	1
18	PASTILLAS DE FRENO TRASERO / *REAR BRAKE PADS*	BE250022068	1
18A	PASTILLAS DE FRENO TRASERO NISSIN / *NISSIN REAR BRAKE PADS*	BE250422068	1
19	DISCO FRENO TRASERO / *REAR BRAKE DISC*	BE250422012	1
20	RADIO 192X4,5 LADO FRENO 18” / *18” BRAKE-SIDE SPOKE 192X4.5*	BE250018014	18
21	RADIO 188X4,5 LADO CORONA 18” / *18” SPROCKET-SIDE SPOKE 188X4.5*	BE250018015	18
22	CAMARA TRASERA 18 CR / *REAR AIR HOSE 18 CR*	BE25618004	1
23	PROTECTOR BANDA TRASERA 18 / *REAR RIM BAND*	BE25618003	1
24	SOPORTE PINZA TRASERA / *REAR CALIPER SUPPORT*	BE250022120	1
25	TORNILLO GUIA / *GUIDE SCREW*	BE250022092	1
26	GUARDAPOLVO / *DUST COVER*	BE250022093	1
27	PINZA FRENO TRASERO / *REAR BRAKE CALIPER*	BE250322001	1
28	PASADOR PASTILLAS / *BRAKE PADS PIN*	BE250022094	1
29	PROTECCIÓN PASADOR / *PIN PROTECTION*	BE250022095	1
30	NEUMÁTICO TRASERO 140/80-18 / *REAR TYRE 140/80-18*	BE25618005	1
31	AGARRE CUBIERTA TRASERA / *REAR TYRE HOLDER*	BE250218008	1
32	TUERCA CON ARANDELA ESTRIADA M8 / *NUT WITH LOCK WASHER M8*	BE25818060	1

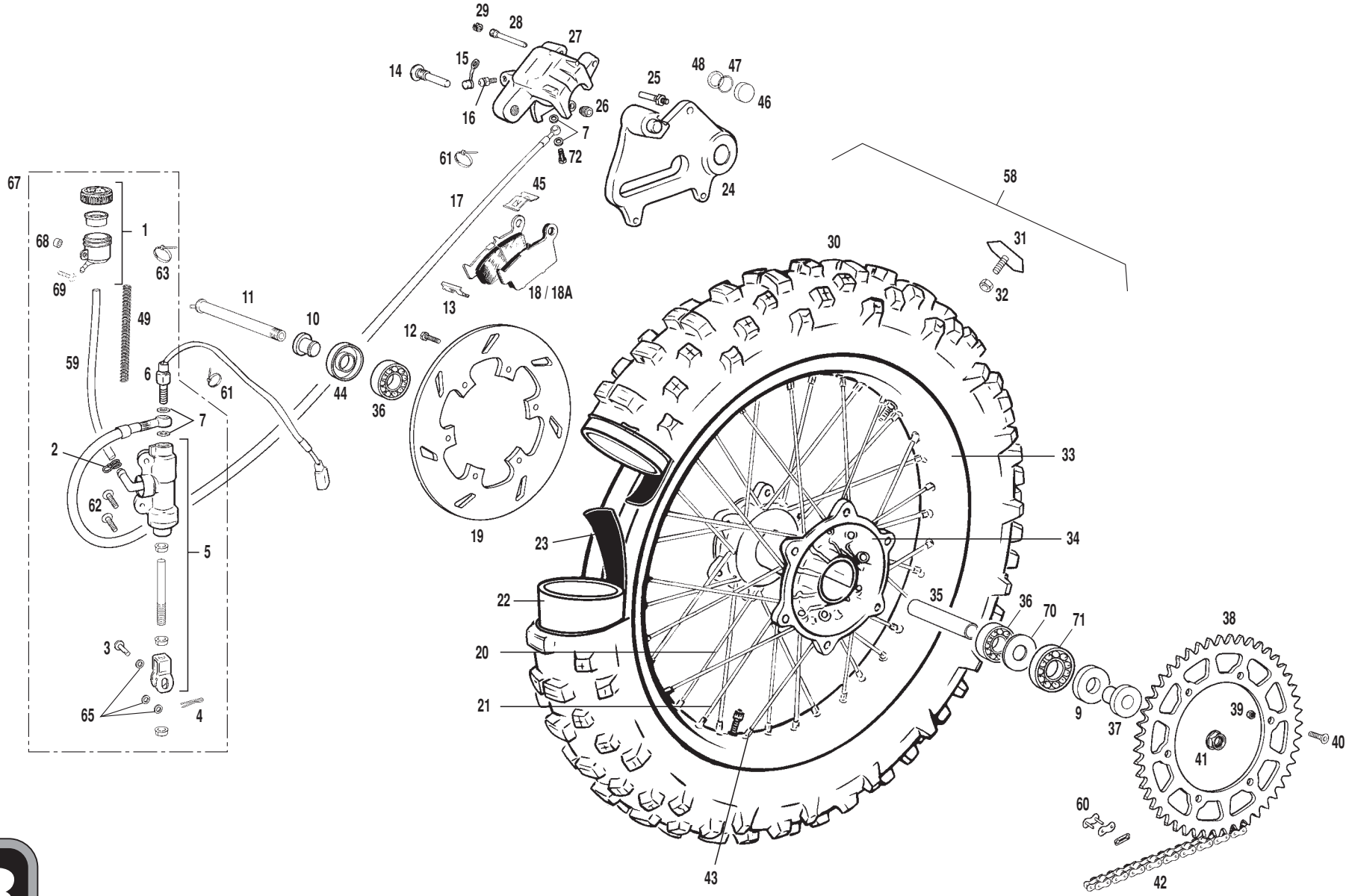
29
28
27
14
15
16
26
7
72
61
25
48
47
46
24
58
67
1
68
63
69
49
59
6
61
7
2
62
5
3
65
4
11
10
44
36
12
19
17
45
13
18 / 18A
30
31
32
33
34
23
22
20
21
35
36
70
71
9
37
38
39
41
40
60
42
43

Nº	DESCRIPCION / *DESCRIPTION*	FSE2004	Cant.
33	LLANTA 2.15X18 / *RIM 2.15X18*	BE250118011	1
34	CUBO RUEDA TRASERA / *REAR WHEEL HUB*	BE250318027	1
35	DISTANCIADOR RUEDA TRASERA INTE. / *REAR WHEEL SPACER*	R575700	1
36	COJINETE 6004 2RSR / *BEARING 6004 2RSR*	C160001	2
37	DISTANCIADOR RUEDA DELANTERA LARGO / *LONG WHEEL SPACER*	BE250318021	1
38	CORONA Z48 SERIE / Z48 *SERIAL SPROCKET*	BE250418034	1
39	TUERCA AUTOBLOCANTE M8 ALTA / *HIGH SELF-LOCKING SPROCKET NUT M8*	T2108002	6
40	ALLEN CÓNICO 8X30 / *CONIC ALLEN BOLT 8X30*	T0408030	6
41	TUERCA AUTOBLOCANTE RUEDA TRASERA / *REAR WHEEL SELF-LOCKING NUT*	BE25618023	1
42	CADENA REGINA / *CHAIN REGINA*	BE250310036	1
43	TUERCA RADIO TRASERO / *REAR SPOKE NUT*	BE250018016	36
44	RETEN / *SEAL*	C160710	1
45	PLATINA (B) SUJ. PAST. TRASERAS / *REAR BRAKE PADS HOLDER BRACKET (B)*	BE250022091	2
46	PISTÓN PINZA FRENO TRASERO / *REAR BRAKE CALIPER PISTON*	BE250022044	2
47	TORICA PISTÓN PINZA FRENO TRASERO / *REAR BRAKE CALIPER PISTON O'RING*	BE250022047	2
48	RETÉN PISTÓN PINZA FRENO TRASERO / *REAR BRAKE CALIPER PISTON SEAL*	BE250022048	1
49	MUELLE DESVAPORIZADOR / *BREATHE SPRING*	M150000	1
58	RUEDA TRASERA / *REAR WHEEL SET*	BE250318100	1
59	TUBO LIQUIDO FRENO / *BRAKE FLUID TUBE*	BFS40010116	1
60	ENGANCHE CADENA / *CHAIN SPLIT LINK*	BE250310066	1
61	BRIDA UNEX CORTA / *SHORT CLAMP*	BE25634010	3
62	TORNILLO ULS 6X16 / *ULS 6X16*	T0506016	2
63	BRIDA / *CLAMP*	BE25634009	1
65	ARANDELA 8X16X1 / *8X16X1 WASHER*	T4008018	3
67	CTO. FRENO TRASERO / *REAR BRAKE SET*	BFS450322118	1
68	CASQUILLO SEPARADOR BOMBA FRENO TRASERO / *SPACER BRAKE BUSHING*	BT120222097	1
69	TORNILLO ESPECIAL 6X16 8.8 ZINCADO / *6X16 SPECIAL SCREW*	T0206016	1
70	ARANDELA INTERIOR CUBO / *INTERIOR HUB WASHER*	BE250318056	1
71	COJINETE RUEDA 6005-25R1 C3 / *WHEEL BEARING*	BE250318054	1
72	RACORD SUJ. LATIGUILLO 10X1,25 / *HOSE HOLDER RACORD 10X1.25*	BC25722006	1

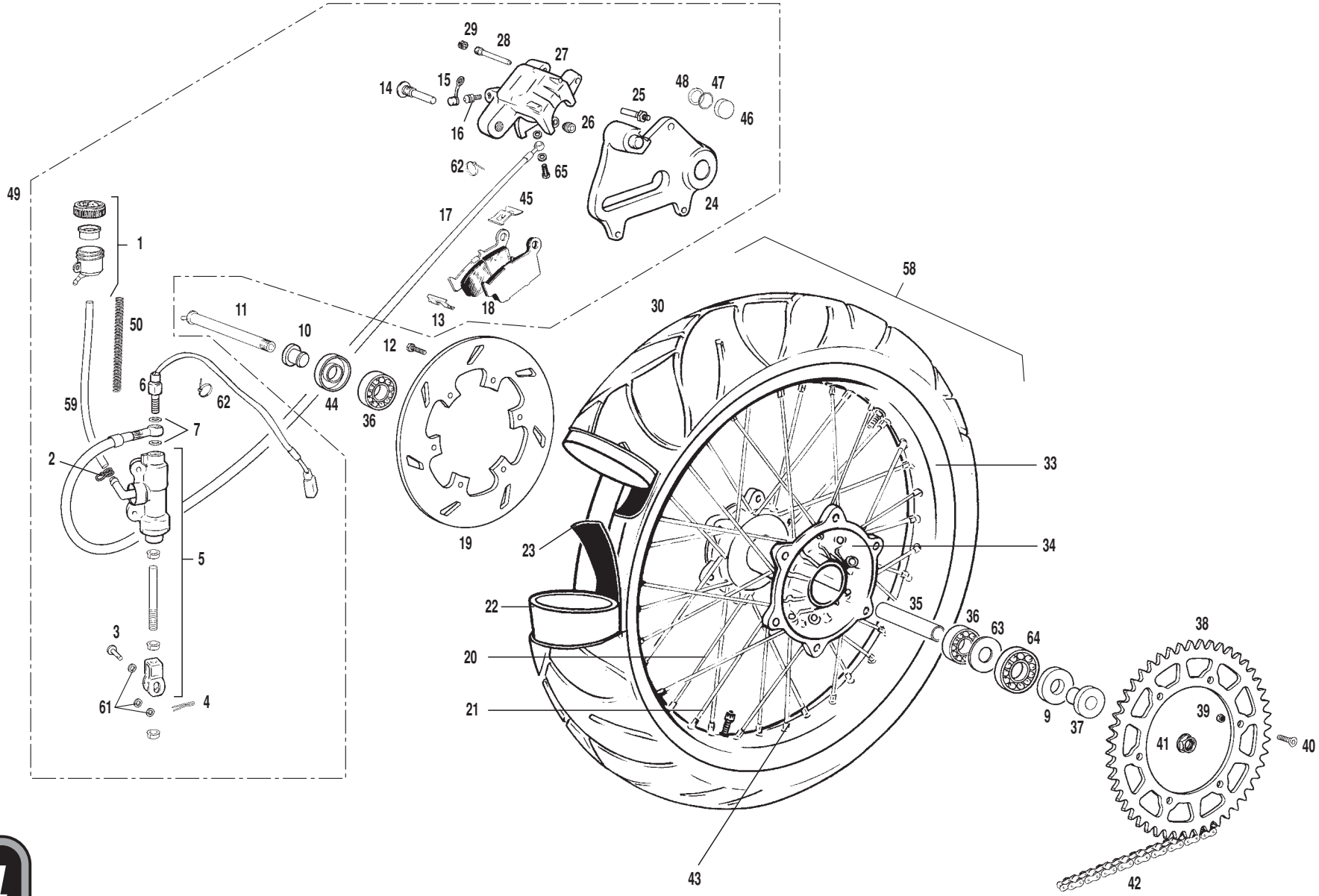
29
28
27
14
15
16
26
25
48
47
46
62
65
24
49
45
17
1
58
11
10
13
18
30
50
12
6
62
44
36
59
7
2
33
19
23
34
5
22
35
36
63
64
38
3
20
9
37
39
61
4
21
41
40
43
42

Nº	DESCRIPCION / *DESCRIPTION*	SM	Cant.
1	DEPÓSITO LÍQUIDO DE FRENOS / *BRAKE FLUID TANK*	L200010	1
2	ABRAZADERA MUELLE M-11.6X12.03 ROSA / *M-11.6 SPRING CLAMP*	BE25610044	1
3	PASADOR 8X20 PEDAL FRENO / *BRAKE PEDAL PIN 8X20*	BE25622026	1
4	CLAVILLA PASADOR FRENO 2X20 / *2X20 BRAKE PEDAL PIN STOPPER*	BE25622027	1
5	BOMBA FRENO TRASERO NISSIN R2MRC019 / *NISSIN REAR BRAKE PUMP*	BE25622010	1
6	INTERRUPTOR 23.024/1 STOP BOMBA NISSIN / *NISSIN BRAKE PUMP STOP SWITCH*	BE250034003/2	1
7	ARANDELA LATIGUILLO 10X14X1 / *10X14X1 HOSE WASHER*	BE25622007	4
9	RETEN RUEDA TRASERA / *REAR WHEEL SEAL*	BE250318055	1
10	DISTANCIADOR RUEDA TRASERA CORTO / *SHORT REAR WHEEL SPACER*	BE250018025	1
11	EJE RUEDA TRASERA / *REAR WHEEL AXIS*	BE25618020	1
12	HEXAGONAL 6X16 DISCO TRASERO / *6X16 REAR DISC BRAKE HEX. SCREW*	BE250018029	6
13	PLATINA (A) SUJ. PASTILLAS TRASERAS / *REAR BRAKE PADS HOLDER (A) BRACKET*	BE250022090	1
14	TORNILLO SUJECCIÓN PINZA / *CALIPER HOLDER SCREW*	BE250022096	1
15	TAPÓN SANGRADOR / *BLEEDER CAP*	BE250022055	1
16	SANGRADOR / *BLEEDER*	BE250022060	1
17	LATIGUILLO FRENO TRASERO NISSIN / *NISSIN REAR BRAKE HOSE*	BE250022004	1
18	PASTILLAS DE FRENO TRASERO / *REAR BRAKE PADS*	BE250022068	1
19	DISCO FRENO TRASERO / *REAR BRAKE DISC*	BE250222012	1
20	RADIO 170X4 LADO FRENO / *BRAKE-SIDE SPOKE 170X4*	BE250118015SM	18
21	RADIO 168X4 LADO CORONA / *SPROCKET-SIDE SPOKE 168X4*	BE250118014SM	18
22	CAMARA TRASERA 17 CG / *REAR AIR HOSE 17 CG*	BE250118004SM	1
23	PROTECTOR BANDA TRASERA 18 / *18 REAR RIM BAND*	BE250118028SM	1
24	SOPORTE PINZA TRASERA / *REAR CALIPER SUPPORT*	BE250022120	1
25	TORNILLO GUIA / *GUIDE SCREW*	BE250022092	1
26	GUARDAPOLVO / *DUST COVER*	BE250022093	1
27	PINZA FRENO TRASERO CON SOPORTE EC2003 / *REAR BRAKE CALIPER*	BE250322001	1
28	PASADOR PASTILLAS / *BRAKE PADS PIN*	BE250022094	1
29	PROTECIÓN PASADOR / *PIN PROTECTION*	BE250022095	1
30	NEUMÁTICO TRASERO 150/60 ZR17 / *150/60 ZR17 REAR TYRE*	BE250118005SM	1
33	LLANTA 2.15X18 / *2.15X18 RIM*	BE250118011SM	1
34	CUBO RUEDA TRASERA / *REAR WHEEL HUB*	BC25718027	1
35	DISTANCIADOR RUEDA TRASERA INT. ALUMINIO / *ALUMINIUM REAR WHEEL SPACER*	R575700	1

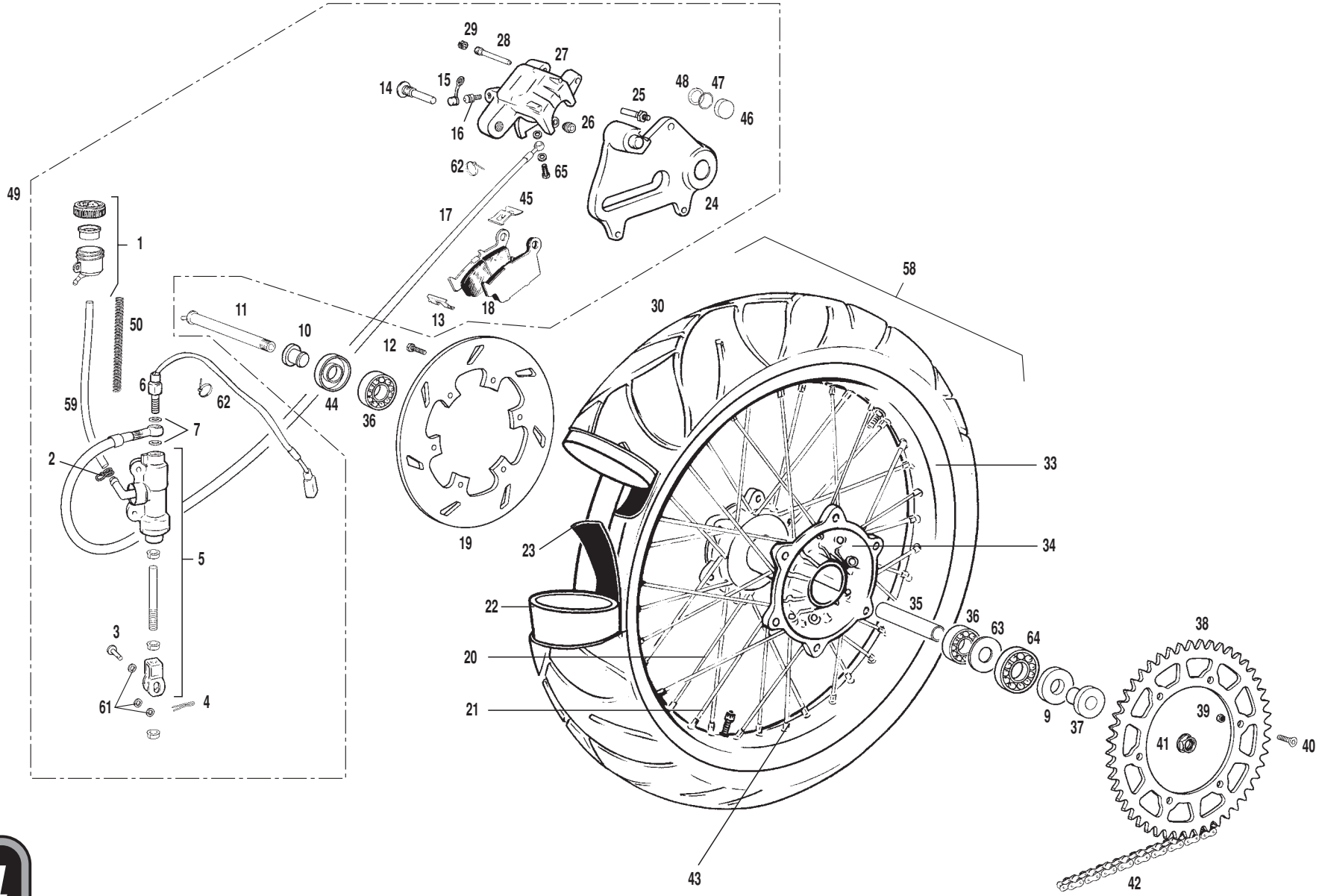
29
28
27
14
15
16
26
25
48
47
46
62
65
24
49
45
17
1
58
11
10
13
18
30
50
12
6
62
44
36
59
7
2
33
19
23
34
5
22
35
36
63
64
38
3
20
9
37
39
61
4
21
41
40
43
42

Nº	DESCRIPCION / *DESCRIPTION*	SM	Cant.
36	COJINETE 6004 2RSR / *6004 2RSR BEARING*	C160001	2
37	DISTANCIADOR RUEDA TRASERA LARGO / *LONG WHEEL SPACER*	BE250318021	2
38	CORONA Z-42 / *Z-42 SPROCKET*	BE250118034SM	1
39	TUERCA AUTOBLOCANTE M8 ALTA CORONA / *M8 HIGH SELF-LOCKING SPROCKET NUT*	T2108002	6
40	ALLEN CÓNICO 8X30 / *8X30 CONIC ALLEN BOLT*	T0408030	6
41	TUERCA AUTOBLOCANTE RUEDA TRASERA / *REAR WHEEL SELF-LOCKING NUT*	BE25618023	1
42	CADENA 108 / *108 CHAIN*	BE250110036SM	1
43	TUERCA RADIO TRASERA / *REAR SPOKE NUT*	BE250118016SM	36
44	RETEN / *SEAL*	C160710	1
45	PLATINA (B) SUJECCIÓN PASTILLAS TRASERAS / *REAR BRAKE PADS HOLDER BRACKET (B)*	BE250022091	1
46	PISTÓN PINZA FRENO TRASERA / *REAR BRAKE CALIPER PISTON*	BE250022044	2
47	TORICA PISTÓN PINZA FRENO TRASERA / *REAR BRAKE CALIPER PISTON O'RING*	BE250022047	2
48	RETÉN PISTÓN PINZA FRENO TRASERA / *REAR BRAKE CALIPER PISTON SEAL*	BE250022048	2
49	CTO. FRENO TRASERO PURGADO / *REAR BRAKE SET*	BFS400322118C	1
50	MUELLE DESVAPORIZADOR / *BREATHE SPRING*	M150000	1
58	RUEDA TRASERA SM / *SM REAR WHEEL SET*	BE250318100SM	1
59	TUBO LIQUIDO FRENO / *BRAKE FLUID TUBE*	BE250010116	1
61	ARANDELA 8X16X1 / *8X16X1 WASHER*	T4008018	3
62	BRIDA UNEX CORTA 2,5X98 / *2,5X98 SHORT CLAMP*	BE25634010	2
63	ARANDELA INTERIOR CUBO / *INTERIOR HUB WASHER*	BE250318056	1
64	COJINETE RUEDA 6005-25R1 C3 / *WHEEL BEARING*	BE250318054	1
65	RACORD SUJ. LATIGUILLO 10X1,25 / *HOSE HOLDER RACORD 10X1.25*	BC25722006	1

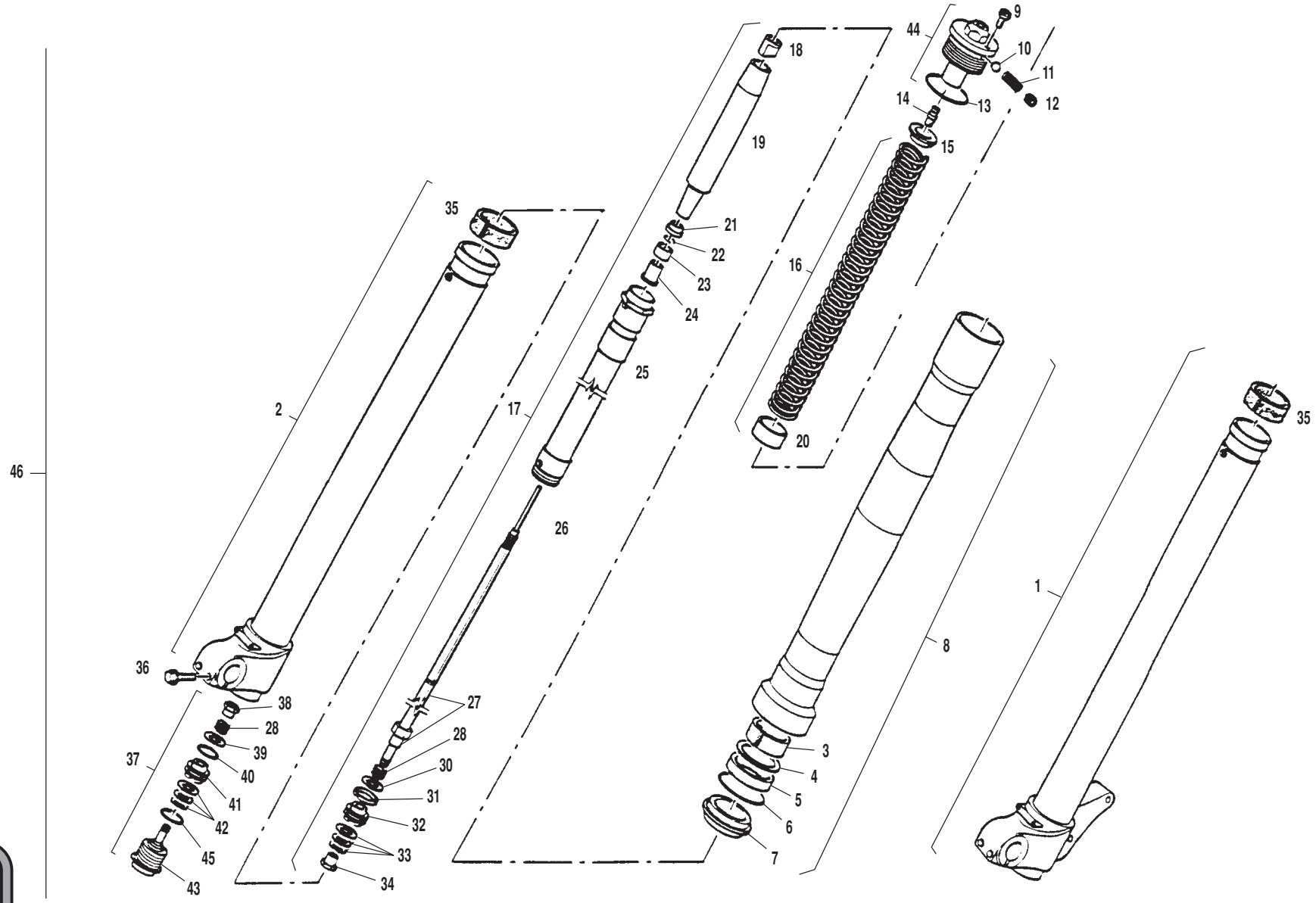
9
44
10
11
12
13
14
15
18
19
21
22
23
24
16
20
35
25
2
17
46
26
1
8
36
38
28
39
37
40
41
42
45
43
27
28
30
31
32
33
34
3
4
5
6
7
35

Nº	DESCRIPCION / *DESCRIPTION*	FSE 2004	Cant.
1	BASE HORQUILLA IZQUIERDA / *LEFT FORK BASE*	BE250414143	1
2	BASE HORQUILLA DERECHA / *RIGHT FORK BASE*	BE250414142	1
3	GLACIER BOTELLA / *GLACIER*	BE25714134	2
4	ANILLO DE CIERRE / *CLOSE RING*	BE250114133	2
5	RETÉN SUSPENSIÓN 45X58X11 / *SUSPENSION SEAL*	C240701	2
6	ANILLO DE CIERRE / *CLOSE RING*	BE25714132	2
7	GUARDAPOLVO / *DUSTKEEPER*	BE25714131	2
8	CTO. BARRA SUSPENSIÓN / *FORK SET*	BE250114110	2
9	TORNILLO Y JUNTA TÓRICA / *BOLT AND O'RING*	BE25714103	2
10	TÓRICA TAPÓN REGULACIÓN / *REGULATION CAP O'RING*	BE250114225	2
11	MUELLE TAPÓN REGULACIÓN / *REGULATION CAP SPRING*	BE250114226	2
12	TORNILLO PEQUEÑO TAPÓN REGULACIÓN / *SMALL BOLT*	BE250114227	2
13	TÓRICA TAPÓN REGULACIÓN / *REGULATION CAP O'RING*	BE250114104	2
14	CASQUILLO REGULACIÓN / *REGULATION BUSHING*	BE250114112	2
15	CASQUILLO GUIA MUELLE / *SPRING GUIDE BUSHING*	BE250114107	2
16	KIT MUELLE Y CASQUILLO / *BUSHING AND SPRING SET*	BE250114228	1
17	CONJ. AMORTIGUACIÓN SUSPENSIÓN / *SUSPENSION SET*	BE250114129	2
18	TUERCA BLOQUEADOR M12X25 / *LOCKER NUT*	BE250114242	2
19	TUBO GUIA MUELLE / *SPRING GUIDE TUBE*	BE250114229	2
20	TOPE PRECARGA / *PRELOAD HOLDER*	BE250114109	2
21	TOPE DE FONDO / *BOTTOM HOLDER*	BE250114230	2
22	ANILLO RETENCIÓN / *HOLDER RING*	BE250114231	2
23	TOPE FONDO HUG D45 / *BOTTOM HOLDER HUG D45*	BE250114232	2
24	TOPE FONDO USD D45 / *BOTTOM HOLDER USD D45*	BE250114233	2
25	CARTUCHO AMORTIGUADOR / *SUSPENSION CARTRIDGE*	BE250114114	2
26	VARILLA INTERNA / *INTERNAL PIN*	BE250114234	2
27	CTO. VARILLA / *PIN SET*	BE250114116	2
28	CASQUILLO VARILLA / *PIN BUSHING*	BE250114118	4
29	CLIP PROTECCIÓN HORQUILLA MARZOCCHI / *PROTECTION CLIP*	BE250114051	2
30	JUNTA 19X8.1X0.3 / *GASKET 19X8.1X0.3*	BE250114235	2
30	JUNTA 21X8.1X0.3 / *GASKET 21X8.1X0.3*	BE250114236	2
30	JUNTA 20X8.1X0.3 / *GASKET 20X8.1X0.3*	BE250114237	2

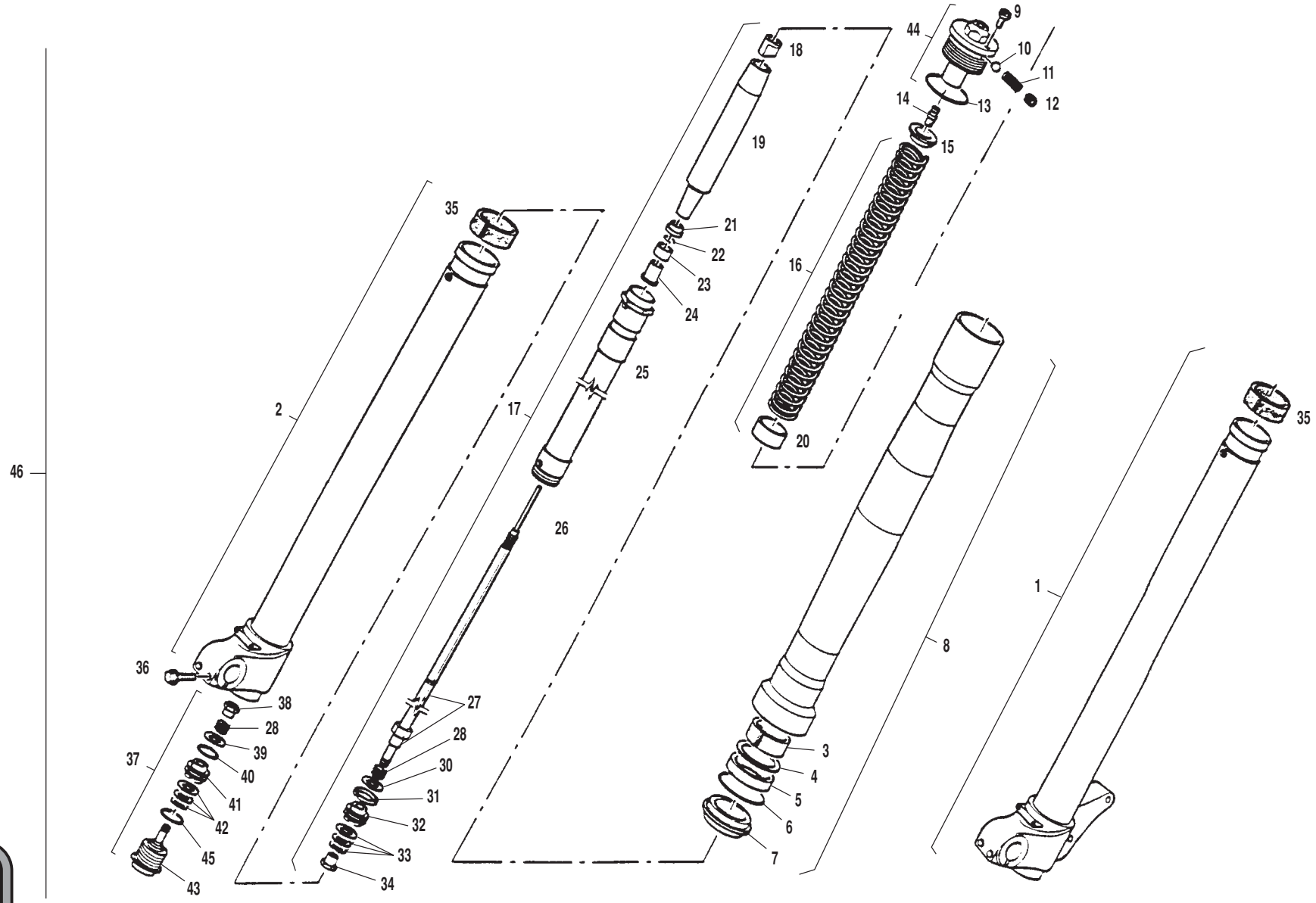
9
44
10
11
12
13
14
15
18
19
21
22
23
24
16
20
35
25
2
17
46
26
1
8
36
38
28
39
37
40
41
42
45
43
27
28
30
31
32
33
34
3
4
5
6
7
35

Nº	DESCRIPCION / *DESCRIPTION*	EC-FSE 2004	SM -FSE	Cant.
30	JUNTA 23X8.1X0.2 / *GASKET 23X8.1X0.2*	BE250114243		2
31	SEGMENTO PISTÓN / *PISTON SEGMENT*	BE250114120		2
32	PISTÓN SUSPENSIÓN / *SUSPENSION PISTON*	BE250114119		2
33	ARANDELA SUSPENSIÓN 15X8.1X0.1 / *SUSPENSION WASHER*	BE250114238		2
33	ARANDELA SUSPENSIÓN 19X8.1X0.1 / *SUSPENSION WASHER*	BE250114239		2
33	ARANDELA SUSPENSIÓN 17X8.1X0.1 / *SUSPENSION WASHER*	BE250114240		2
33	ARANDELA SUSPENSIÓN 21X8.1X0.1 / *SUSPENSION WASHER*	BE250114241		4
34	VÁLVULA BASE / *BASE VALVE*	BE250114126		2
35	CASQUILLO INTERIOR BOTELLA / *INNER BUSHING*	BE250114128		2
36	TORNILLO 6X25 DIN 6921 8.8 / *BOLT 6X25*	BE250114144		4
37	GRUPO AMORTIGUADOR / *SUSPENSION GROUP*	BE250114124		2
38	CASQUILLO M6X0.75 / *BUSHING*	BE250114244		2
39	JUNTA 23X8.1X0.3 C72 BLU / *GASKET 23X8.1X0.3*	BE250114245		2
40	TÓRICA 2087 D21.95 S1.78 / *O`RING 2087*	BE250114246		2
41	PISTÓN D.26 SINTER. / *PISTON D.26*	BE250114247		2
42	JUNTA 15X8.1X0.1 / *GASKET 15X8.1X0.1*	BE250114248		2
42	JUNTA 19X8.1X0.1 / *GASKET 19X8.1X0.1*	BE250114248-1		2
42	JUNTA 23X8.1X0.1 / *GASKET 23X8.1X0.1*	BE250114248-2		6
42	JUNTA 17X8.1X0.1 / *GASKET 17X8.1X0.1*	BE250114248-3		2
42	JUNTA 20X8.1X0.1 / *GASKET 20X8.1X0.1*	BE250114248-4		2
42	JUNTA 22X8.1X0.1 / *GASKET 22X8.1X0.1*	BE250114248-5		2
42	JUNTA 12X8.1X0.1 / *GASKET 12X8.1X0.1*	BE250114248-6		2
42	JUNTA 14X8.1X0.1 / *GASKET 14X8.1X0.1*	BE250114248-7		4
42	JUNTA 16X8.1X0.1 / *GASKET 16X8.1X0.1*	BE250114248-8		2
43	VÁLVULA DE AJUSTE / *ADJUSTING VALVE*	BE250114249		2
44	CTO. TAPÓN REGULACIÓN / *REGULATION CAP SET*	BE250114105		2
45	TÓRICA 2100 D25.1 S1.78 / *O'RING 2100*	BE250114		2
46	CTO. SUSPENSION DELANTERA MARZOCCHI / *MARZOCCHI FRONT SUSP.*	BFS450414000MZ	BE250414000	1

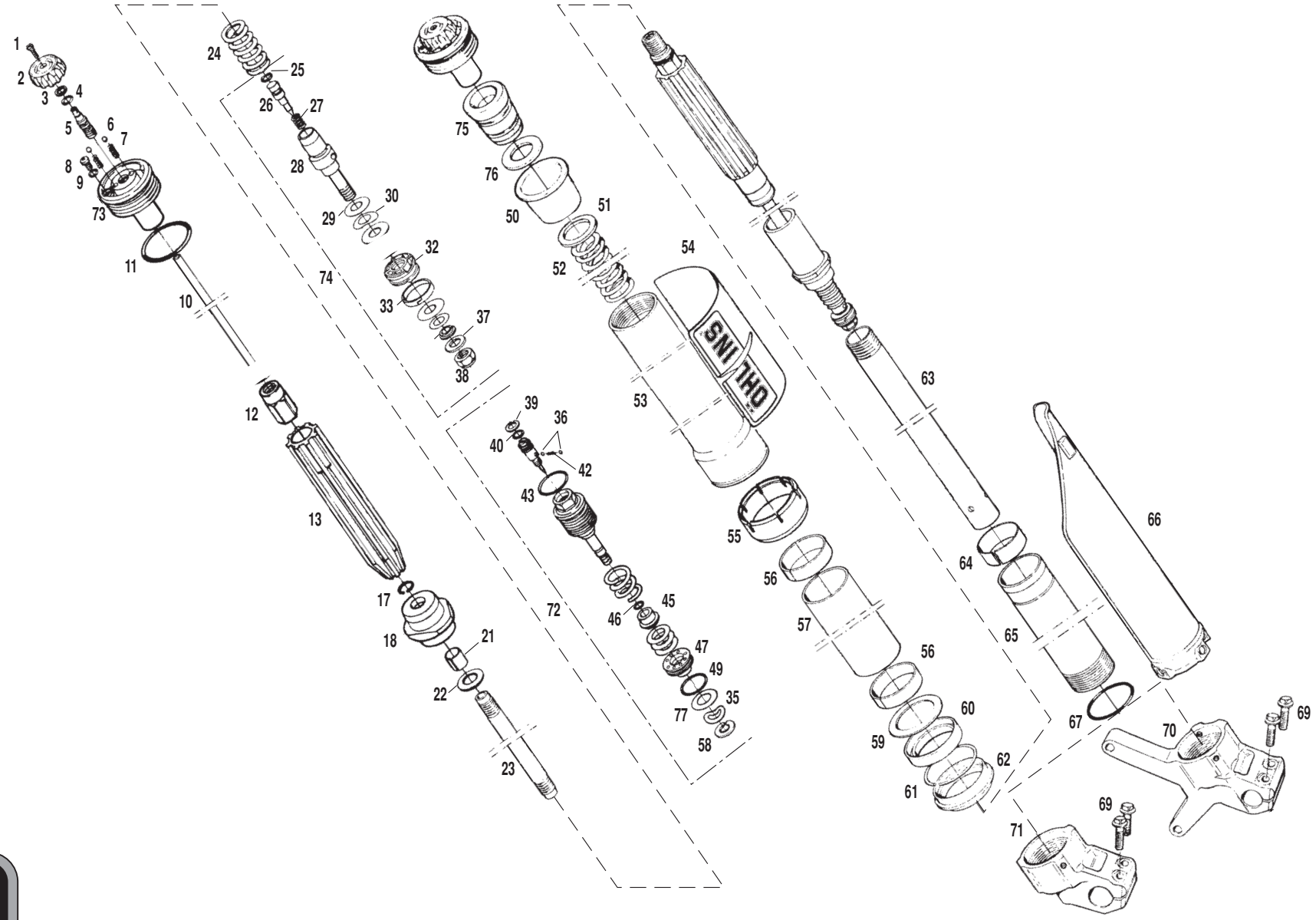
1
2
3
4
5
6
7
8
9
73
11
10
12
13
17
18
21
22
23
24
25
26
27
28
29
30
74
32
33
37
38
39
36
40
42
43
72
45
46
47
49
35
77
58
75
76
50
51
52
54
53
55
56
57
56
60
59
61
62
63
64
65
66
67
70
69
69
71

Nº	DESCRIPCION / *DESCRIPTION*	2004	Cant.
1	TORNILLO / *SCREW*	BE250314100OH	2
2	RODILLO REGULACIÓN / *ADJUSTMENT KNOB*	BE250314101OH	2
3	CIRCLIP / *CIRCLIP*	BE250314224OH	2
4	TORICA / *O'RING*	BE250314103OH	2
5	TORNILLO DE AJUSTE / *ADJUSTMENT SCREW*	BE250314112OH	2
6	BOLA / *BALL*	BE250314250OH	4
7	MUELLE / *SPRING*	BE250314226OH	4
8	TORNILLO / *SCREW*	BE250114100OH	2
9	TORICA / *O'RING*	BE250114104OH	2
10	VARILLA DE AJUSTE / *ADJUSTMENT ROD*	BE250314116OH	2
11	TORICA / *O-RING*	BE250314104OH	2
12	GUIA VARILLA / *NEEDLE HOUSING*	BE250314220OH	2
13	GUIA FUNDA / *GUIDING SLEEVE*	BE250314230OH	2
17	CIRCLIP / *CIRCLIP*	BE250114252OH	2
18	CENTRADOR / *CYLINDER TUBE CAP*	BE250314219OH	2
21	GLACIER / *BUSHING*	BE250114253OH	2
22	ARANDELA / *WASHER*	BE250114216OH	2
23	EJE / *SHAFT*	BE250314178OH	2
24	MUELLE / *SPRING*	BE250114254OH	2
25	TORICA / *O-RING*	BE250114255OH	1
26	AGUJA DE EXTENSIÓN / *REBOUND NEEDLE*	BE250114112OH	1
27	MUELLE / *SPRING*	BE250114256OH	1
28	SOPORTE PISTON / *PISTON HOLDER*	BE250114195OH	1
29	ARANDELA REGLAJE / *SHIM WASHER*	BE250114202OH	1
30	ARANDELA ONDULADA / *WAVE WASHER*	BE250114203OH	1
32	PISTON REGLAJE / *REBOUND PISTON*	BE250114200OH	1
33	ARO DEL PISTON / *PISTON RING*	BE250114207OH	1
35	ARANDELA ONDULADA / *WAVE WASHER*	BE250314203OH	1
37	ARANDELA / *WASHER*	BE250114213OH	1
38	TUERCA CIERRE / *LOCK NUT*	BE250114202OH	1
39	CIRCLIP / *CIRCLIP*	BE250114214OH	1
40	TÓRICA / *O-RING*	BE250114257OH	1
43	TORICA / *O-RING*	BE250114259OH	1
45	*POPPET VALVE*	BE250314248OH	1
46	TORICA / *O'RING*	BE250314264OH	1

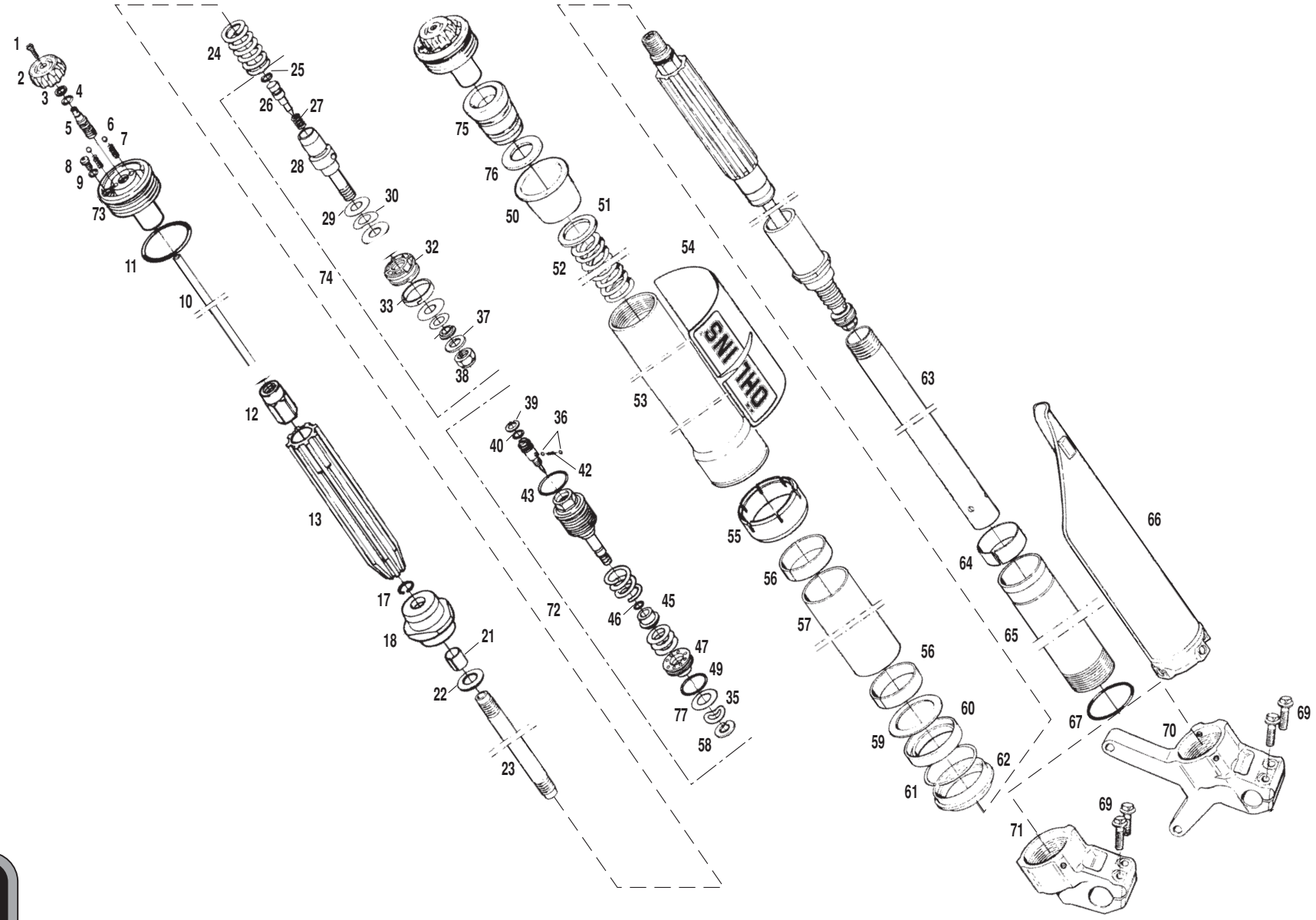
1
2
3
4
5
6
7
8
9
73
11
10
12
13
17
18
21
22
23
24
25
26
27
28
29
30
74
32
33
37
38
39
36
40
42
43
72
45
46
47
49
35
77
58
75
76
50
51
52
54
53
55
56
57
56
60
59
61
62
63
64
65
66
67
70
69
69
71

MOTOR

Conjunto pedal arranque / *Kickstart set* — GASGAS — FSE 2003

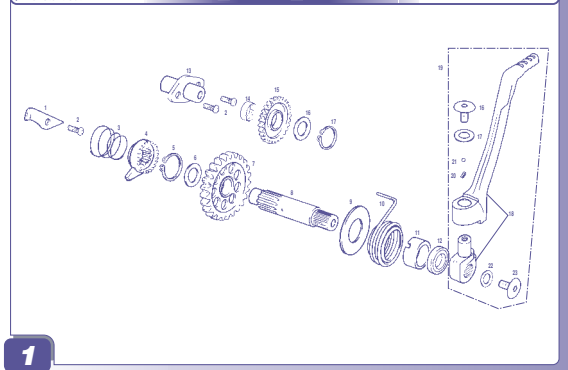

1

Bombas aceite / *Oil pumps* — GASGAS — FSE 2003

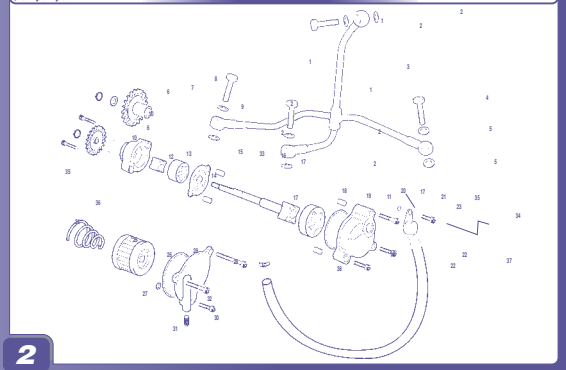

2

Selector cambio / *Shift cam* — GASGAS — FSE 2003

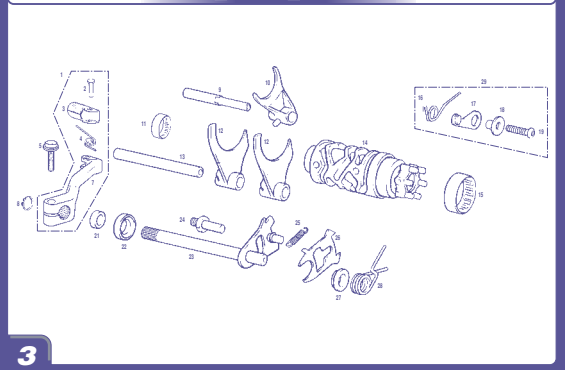

3

Engranajes cambio / *Gear set* — GASGAS — FSE 2003

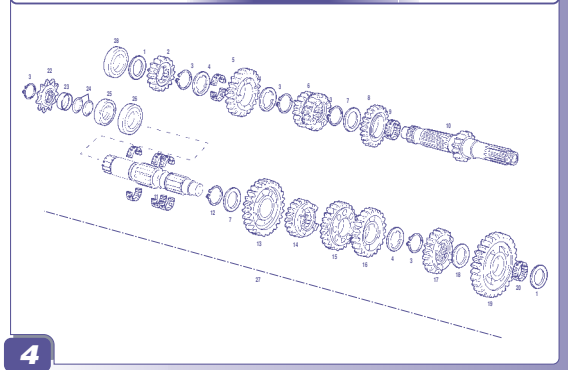

4

Cárter derecho / *Right crankcase* — GASGAS — FSE 2003

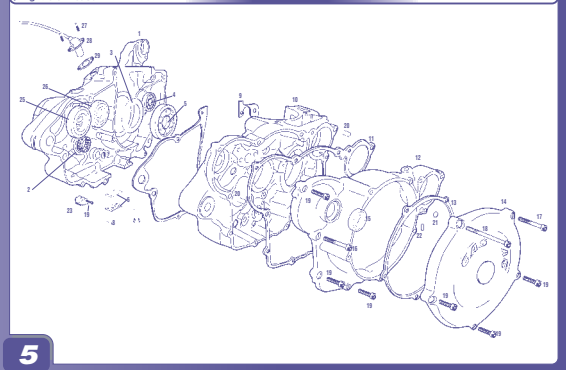

5

Cárter izquierdo / *Left crankcase* — GASGAS — FSE 2003

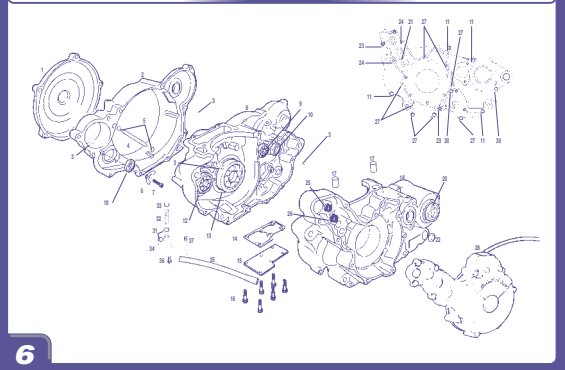

6

DESPIECE

ENGINE

Encendido / *Ignition* GASGAS FSE 2003

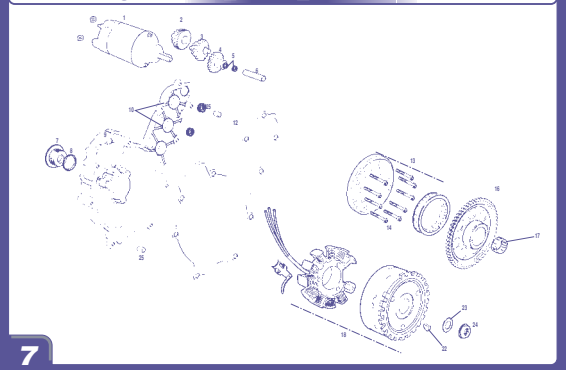

7

Cigueñal / *Crankshaft* GASGAS FSE 2003

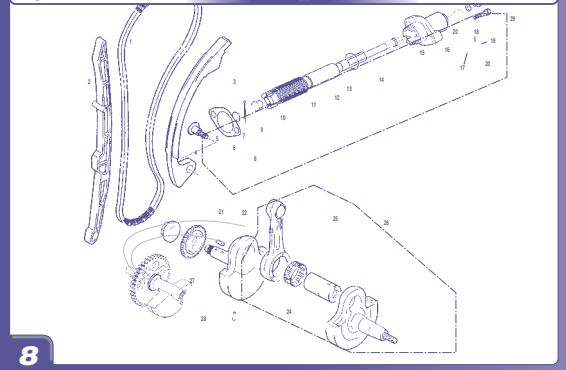

8

Embrague / *Clutch* GASGAS FSE 2003

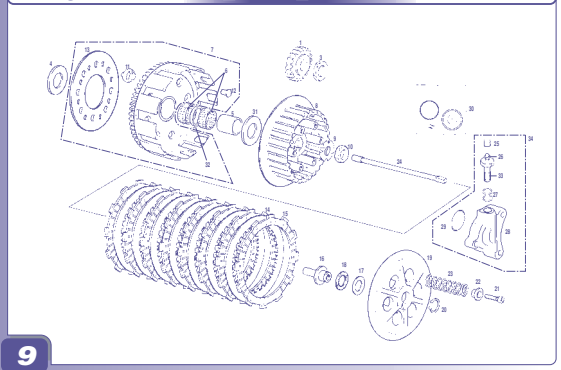

9

Cilindro / *Cylinder* GASGAS FSE 2003

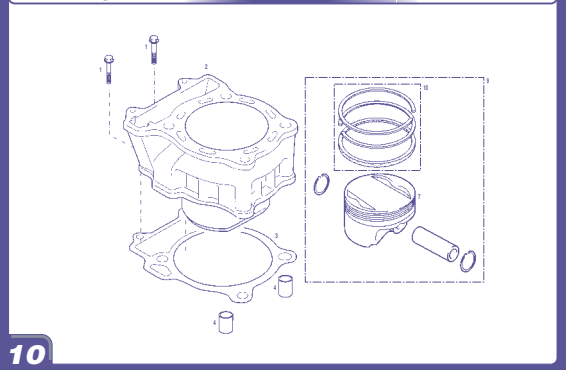

10

Culata / *Cyl. head* GASGAS FSE 2003

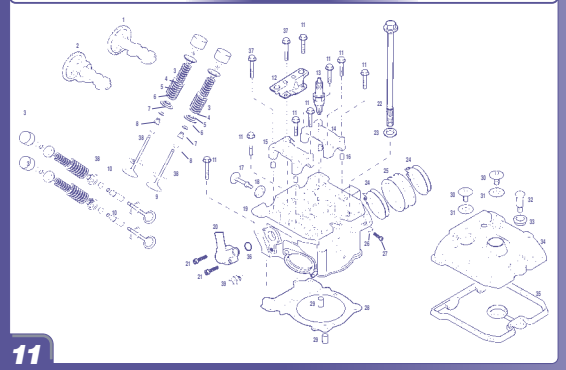

11

Bomba agua / *Water pump* GASGAS FSE 2003

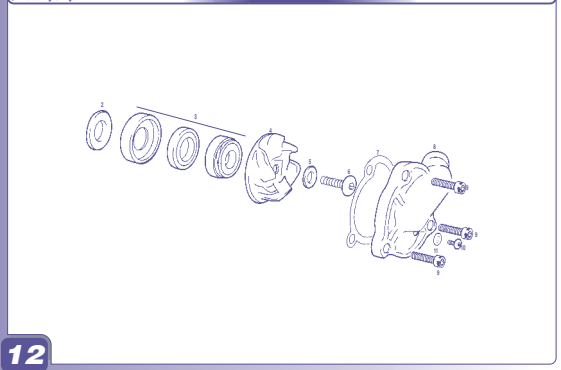

12

PART LIST

Nº	DESCRIPCION / *DESCRIPTION*	2004	Cant.
47	ASIENTO VALVULA / *VALVE SEAT*	BE250114247OH	1
49	TORICA / *O'RING*	BE250314261OH	1
50	SOPORTE DEL MUELLE / *SPRING SUPPORT*	BE250114262OH	2
51	ARANDELA PRECARGA / *PRELOAD WASHER*	BE250114107OH	2
52	MUELLE HORQUILLA DELANTERA / *SPRING FRONT FORK*	BE250114108OH	2
53	BOTELLA / *FORK LEG OUTER*	BE250114206OH	2
54	ADH. PROTECTOR ÖHLINS / *COVER STICKER ÖHLINS*	BE250338042OH	2
55	*GUIDE SLEEVE*	BE250314182OH	2
56	CASQUILLO INFERIOR / *BUSHING LOWER*	BE250114134OH	4
57	SEPARADOR / *SLEEVE*	BE250114109OH	2
58	CIRCLIP / *CIRCLIP*	BE250314202OH	1
59	ARANDELA / *WASHER*	BE250114133OH	2
60	RETÉN / *SEAL*	BE250114212OH	2
61	CIRCLIP / *CIRCLIP*	BE250114132OH	2
62	GUARDAPOLVO / *SCRAPER*	BE250114131OH	2
63	CARTUCHO CILINDRICO / *CILINDER TUBE CARTRIDGE*	BE250114114OH	2
64	CASQUILLO SUPERIOR / *BUSHING UPPER*	BE250114111OH	2
65	BARRA SUSPENSION / *FORK LEG INNER*	BE250114110OH	2
66	PROTECTORES HORQUILLA / *COVER FORK LEG PAIR*	BC250114040	1
67	TÓRICA / *O-RING*	BE250114263OH	2
69	TORNILLO BASE HORQUILLA / *BOLT FORK BOTTOM*	BE250114209OH	4
70	BASE BOTELLA IZQUIERDA / *FORK BOTTOM LEFT*	BE250414143OH	1
71	BASE BOTELLA DERECHA / *FORK BOTTOM RIGHT*	BE250414142OH	1
72	CTO. REGULACION EXTENSION / *BASE VALVE ASSY*	BE250314267OH	1
73	TAPON / *TOP CAP*	BE250314105OH	2
74	CTO. REGULACION COMPRESION / *COMPRESSION REGULATOR SET*	BE250314268OH	1
75	*BUMP RUBBER*	BE250314265OH	2
76	*SLIDE WASHER*	BE250314266OH	2
77	ARANDELA / *SHIM*	BE250314245OH	1
78	CTO. SUSPENSION OHLINS 2004 / *2004 OHLINS SUSPENSION SET*	BE250414000OH	1

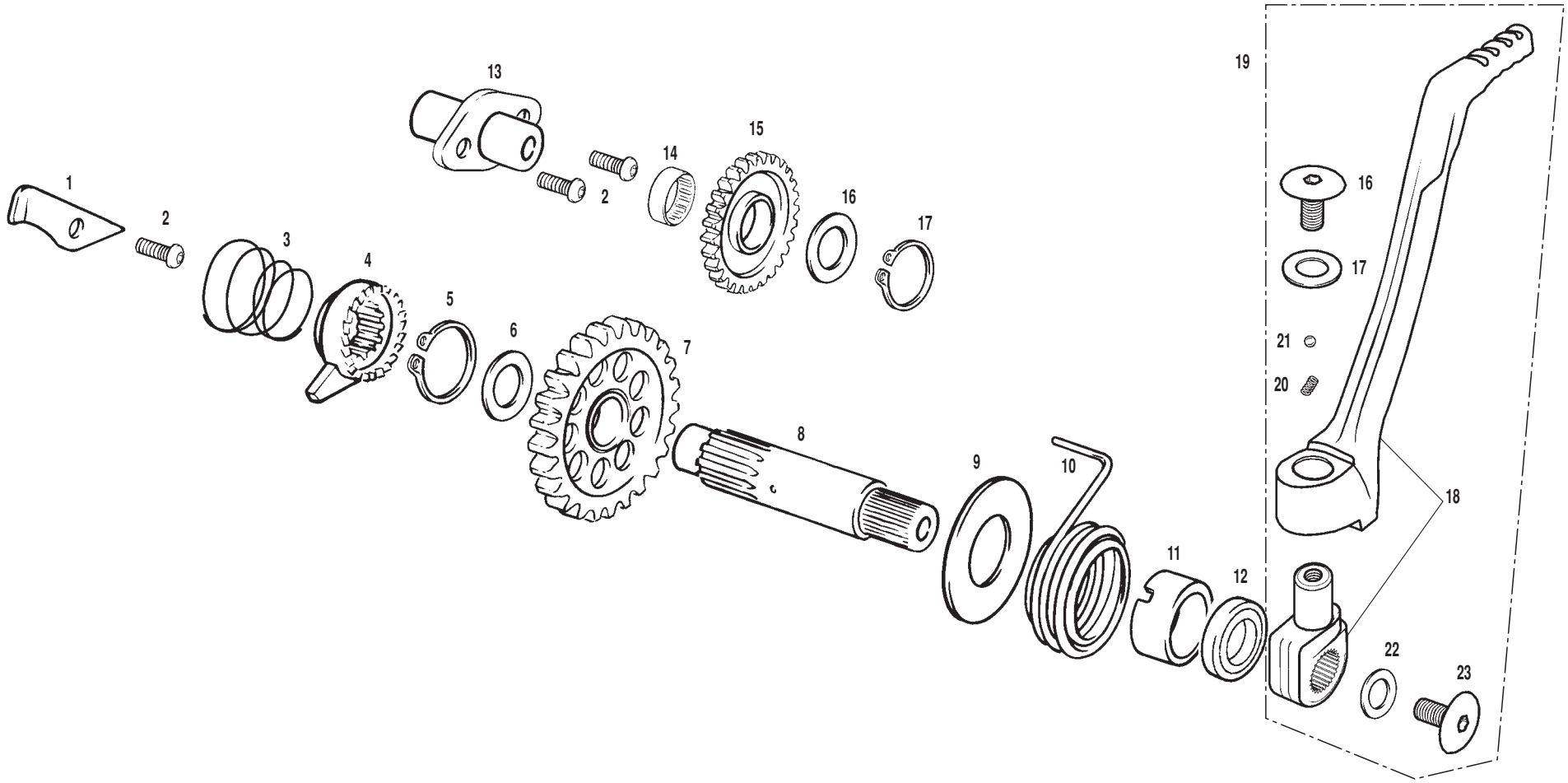
1
2
3
4
5
6
7
8
9
10
11
12
13
2
14
15
16
17
19
16
17
21
20
18
22
23

Nº	DESCRIPCION / *DESCRIPTION*	FSE 2004	Cant.
1	PLATINA TRINQUETE ARRANQUE / *KICKSTARTER GUIDE*	MFS400136005	1
2	ULS 6X12 / *6X12 ULS*	T0506012	3
3	MUELLE TRINQUETE ARRANQUE / *KICKSTARTER SPRING*	ME25636006	1
4	TRINQUETE ARRANQUE / *KICKSTARTER*	ME250126004	1
5	SEEGER DE 20 ARRANQUE / *CIRCLIP*	ME25636052	1
6	ARANDELA TOPE 27X20,2X1 DESP. ARRANQUE / *END WASHER 27X20.2X1*	ME25636000	1
7	PIÑON ARRANQUE / *KICKDRIVE GEAR*	ME250126002	1
8	EJE ARRANQUE / *KICKSTARTER SHAFT*	ME250126003	1
9	ARANDELA ARRANQUE 20X40X1 / *KICKSTARTER WASHER 20X40X1*	ME25636051	1
10	MUELLE ARRANQUE / *KICKSTARTER SPRING*	ME25636007	1
11	CASQUILLO CENTRADOR MUELLE ARRANQUE / *KICKSTARTER SPRING BUSHING*	ME250136053	1
12	RETEN PEDAL ARRANQUE 20X30X7 / *KICKSTARTER OIL SEAL 20X30X7*	ME25632021	1
13	SOPORTE PIÑON / *BEARING SUPPORT*	MFS400126010	1
14	JAULA AGUJAS K15X18X14 TN / *K15X18X14 TN NEEDLES BEARING*	MFS400126011	1
15	PIÑON INTERIOR ARRANQUE / *KICKSTART INNER PINION*	MFS400126001	1
16	VOLANDERA PIÑON ARRAN.24X15,15X0,5 / *WASHER 24.15.15X0.5*	ME25636012	1
17	SEEGER EJE 15 EMBRAGUE / *CLUTCH AXLE SEEGER 15*	ME25632017	1
18	PEDAL Y MUÑEQUILLA PEDAL ARRANQUE / *KICKSTARTER LEVER BASE*	ME250036061	1
19	CTO. PEDAL ARRANQUE ALUM. MUÑ. D.18 / *KICKSTARTER LEVER SET*	MFS400126060	1
20	MUELLE MUÑEQUILLA PEDAL ARRANQUE / *KICKSTARTER LEVER SPRING*	ME250036066	1
21	BOLA MUÑEQUILLA PEDAL ARRANQUE / *KICKSTARTER LEVERBALL*	ME250036062	1
22	ARANDELA 6X20X1.5 / *WASHER 6X20X1.5*	T4006020	1
23	TORNILLO 6X12 CABOTA TORK / *TORK SCREW 6X12*	T0316012	1

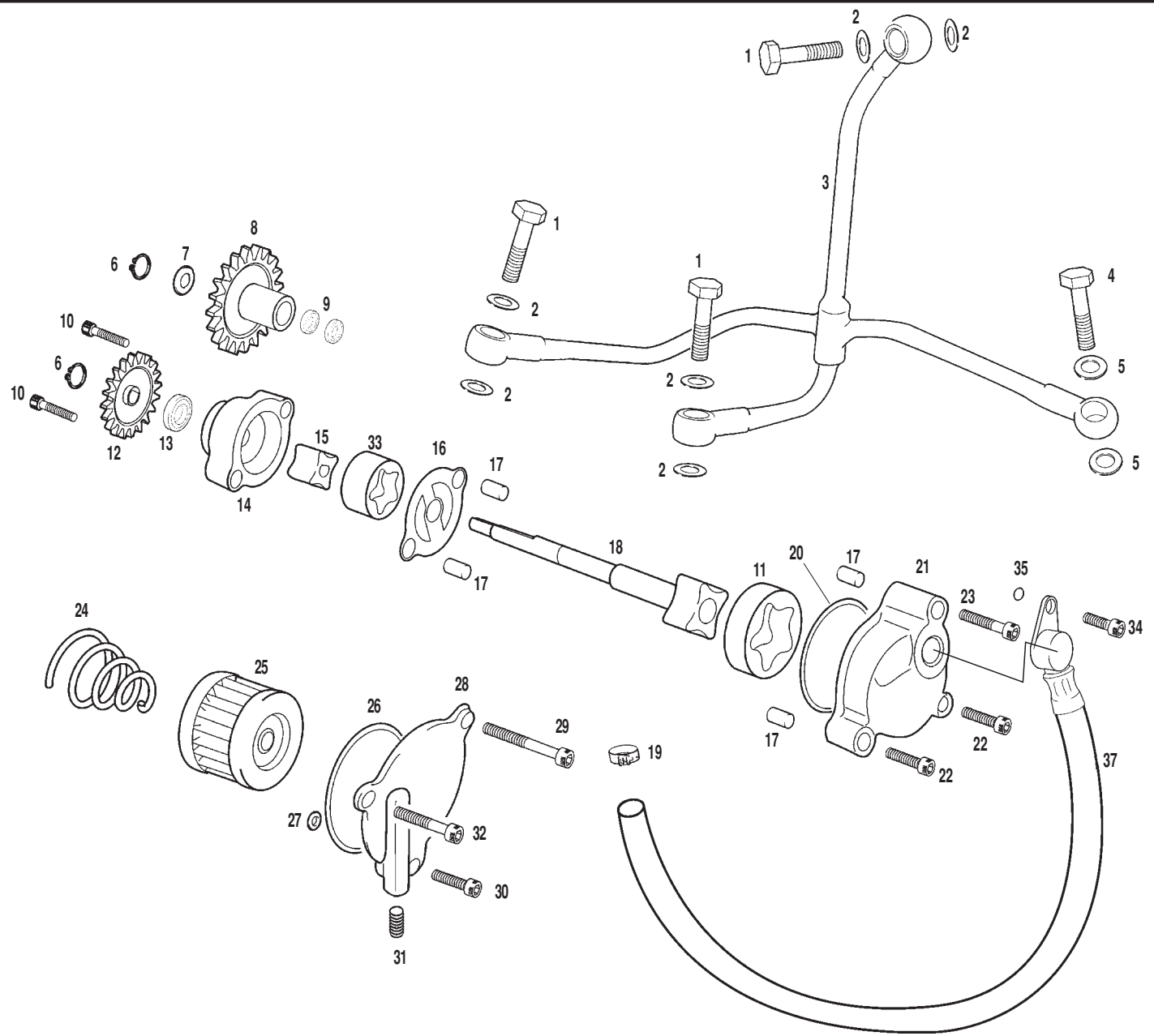
1
2
2
3
1
1
2
2
2
2
4
5
5
6
7
8
9
10
6
10
12
13
14
15
33
16
17
17
18
11
20
17
21
35
23
34
24
25
26
28
29
19
17
22
22
37
27
32
30
31

Nº	DESCRIPCION / *DESCRIPTION*	FSE 2004	Cant.
1	RACORD CIRCUITO ACEITE / *RACORD 22 MM.*	MFS400122570	3
2	ARANDELA COBRE 8X12X1,5 / *8X12X1,5 WASHER*	T4008012	6
3	DISTRIBUIDOR ACEITE / *OIL SUPPLY*	BFS400110856	1
4	TORNILLO RACORD / *RACORD 10 MM.*	MFS40011024	1
5	ARANDELA COBRE 11x15x1.5 / *11x15x1.5 WASHER*	T4001115	2
6	SEEGER D.8 EJE BOMBA ACEITE / *OIL AXIS SEEGER*	MFS400122305	2
7	ARANDELA REGLAJE 08,1X17X0.2 / *08,1X17X0.2 WASHER*	ST950705	1
8	RUEDA DENTADA / *COG WHEEL*	MFS400122450	2
9	COJINETE HK 0808 / *HK 0808 BEARING*	MFS400126535	2
10	TORNILLO 6X35 / *6X35 SCREW*	T0306035	2
11	ANILLO BOMBA RECUPERACIÓN D.44 / *RETRIEVABLE PUMP RING*	MFS400122120	1
12	PIÑON BOMBA ACEITE / *OIL PUMP PINION*	MFS400122400	1
13	COJINETE 508Z / *508Z BEARING*	ME25616032	1
14	CUERPO BOMBA ACEITE PRESIÓN / *OIL PUMP BODY*	MFS400122230	1
15	ROTOR BOMBA ACEITE / *OIL PUMP ROTOR*	MFS400122105	1
16	JUNTA BOMBA ACEITE / *OIL PUMP GASKET*	MFS400122410	1
17	CASQUILLO CENTRADOR / *CENTRER BUSHING*	MFS400116066	4
18	EJE BOMBA ACEITE / *OIL PUMP AXLE*	MFS400122300	1
19	ABRAZADERA COBRA 21 / *21 CLAMP*	L200046	1
20	TORICA TAPA BOMBA ACEITE RETORNO / *RETURN OIL PUMP COVER O'RING*	MFS400122131	1
21	TAPA BOMBA ACEITE RETORNO / *OIL PUMP COVER*	MFS400122130	1
22	ALLEN 6X25 / *ALLEN BOLT 6X25*	T0306025	2
23	ALLEN 6X45 / *ALLEN BOLT 6X45*	T0306045	1
24	MUELLE APRETADOR FILTRO ACEITE / *OIL FILTER SPRING*	MFS400122560	1
25	FILTRO ACEITE / *OIL FILTER*	MFS400122550	1
26	TORICA TAPA FILTRO ACEITE / *OIL FILTER COVER O'RING*	MFS400122555	1
27	TORICA 6X2 EJE CENTR.VAL.ESCAPE / *6X2 O'RING*	ME25616045	1
28	TAPA FILTRO ACEITE / *AIR FILTER COVER*	MFS400122551	1
29	ALLEN 6X50 / *ALLEN BOLT 6X50*	T0306050	1
30	ALLEN 6X20 / *ALLEN BOLT 6X20*	T0306020	1
31	TORNILLO ESPECIAL M8 / *SPECIAL SCREW M8*	T0208108	1
32	ALLEN 6X55 / *ALLEN BOLT 6X55*	T0306055	1
33	ANILLO BOMBA EATON PRESIÓN / *EATON PRESSURE PUMP RING*	MFS400122110	1

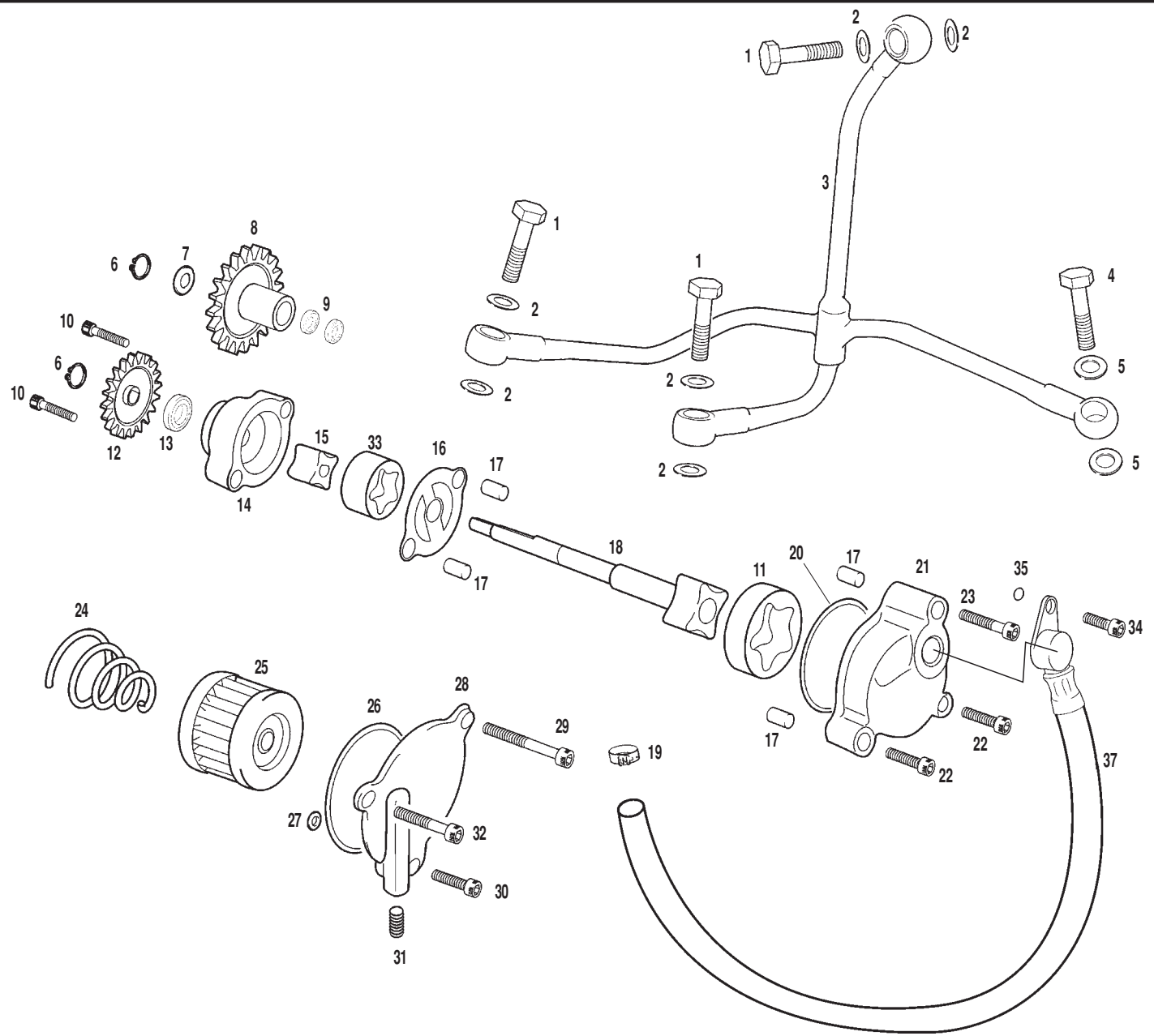
1
2
2
3
1
1
2
2
2
2
4
5
5
6
7
8
9
10
6
10
12
13
14
15
33
16
17
17
18
11
20
17
21
35
23
34
24
25
26
28
29
19
17
22
22
37
27
32
30
31

Nº	DESCRIPCION / *DESCRIPTION*	FSE 2004	Cant.
34	ALLEN 6X12 / *6X12 ALLEN BOLT*	T0306012	1
35	TORICA CENTRÍFUGO 6X2	ME25616045	2
36	ALLEN 6X40 / *6X40 ALLEN BOLT*	T0306040	1
37	CTO.TUBO METALICO RETORNO / *OIL RETURN METALLIC HOSE SET*	BFS450432216	1
38	BRIDA MEDIANA 4,8X20 / *4,8X20 CLAMP*	BE25634008	1

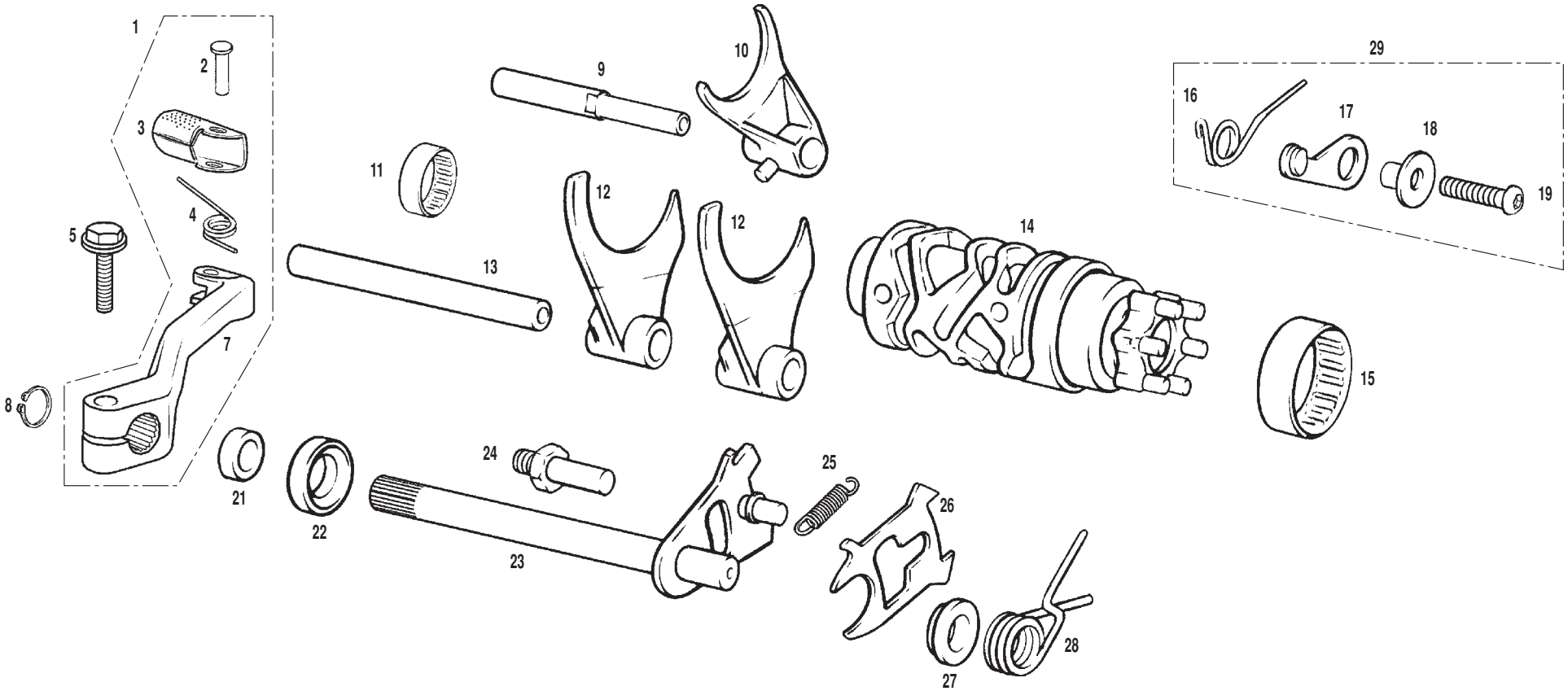
1
2
3
4
5
7
8
9
10
11
12
12
13
14
15
16
17
18
19
21
22
23
24
25
26
27
28
29

Nº	DESCRIPCION / *DESCRIPTION*	FSE 2004	Cant.
1	CTO. PEDAL CAMBIO / *GEAR LEVER SET*	ME250036026R	1
2	PASADOR PUNTERA PEDAL 6X18 / *LEVER END PIN 6X18*	ME25636030	1
3	PUNTERA PEDAL CAMBIO / *GEAR LEVER END*	ME25636027	1
4	MUELLE PUNTERA PEDAL CAMB. / *GEAR LEVER END SPRING*	ME25636029	1
5	HEXAGONAL 6X25 / *HEXAGONAL BOLT 6X25*	T0106025	1
7	PEDAL CAMBIO / *GEAR LEVER*	ME250036026	1
8	SEEGER 12X1 EXTERIOR EJE SELECTOR / *SEEGER 12X1*	ME25636043	1
9	EJE HORQUILLA 5-6 / *5-6 FORK AXIS*	MFS400136045	1
10	HORQUILLA 5-6 / *SHIFT FORK 5-6*	ME25636009	1
11	RODAMIENTO HK2512 DESMODROMICO / *SHIFT CAM BEARING*	ME25636055	1
12	HORQUILLA 1-2-3-4 / *SHIFT FORK 1-2-3-4*	ME25636008	2
13	EJE HORQUILLA 1-2-3-4 / *1-2-3-4 FORK AXIS*	ME25636044	1
14	DESMODROMICO / *SHIFT CAM*	MFS400138031	1
15	RODAMIENTO HK3512 DESMODROMICO / *SHIFT CAM BEARING*	ME25636054	1
16	MUELLE FIJADOR MARCHAS / *GEAR FASTEN SPRING*	MFS400136034	1
17	FIJADOR MARCHAS / *GEAR FASTEN*	MFS400136033	1
18	CASQUILLO PLATINA FIJADOR MARCHAS / *GEAR BUSHING*	MFS400136047	1
19	ULS 6X16 / *6X16 ULS*	T0506016	1
21	RETEN SELECTOR 12-22-7 / *SEAL 12-22-7*	ME25636048	1
22	CASQUILLO EJE SELECTOR / *AXIS BUSHING*	ME250136050	1
23	EJE SELECTOR / *SELECTOR AXIS*	ME250236038	1
24	TORNILLO CENTRADOR MUELLE SELECTOR / *SELECTOR SPRING SCREW*	ME25636042	1
25	MUELLE ESCORPION / *SCORPION SPRING*	ME25636039	1
26	ESCORPION / *SCORPION*	ME250236036	1
27	DOLLA CENTRADOR ESCORPION / *SCORPION CENTRER BUSHING*	ME250236041	1
28	MUELLE SELECTOR / *SELECTOR SPRING*	ME25636035	1
29	CTO. FIJADOR MARCHAS / *GEAR FASTEN SET*	MFS400136033C	1

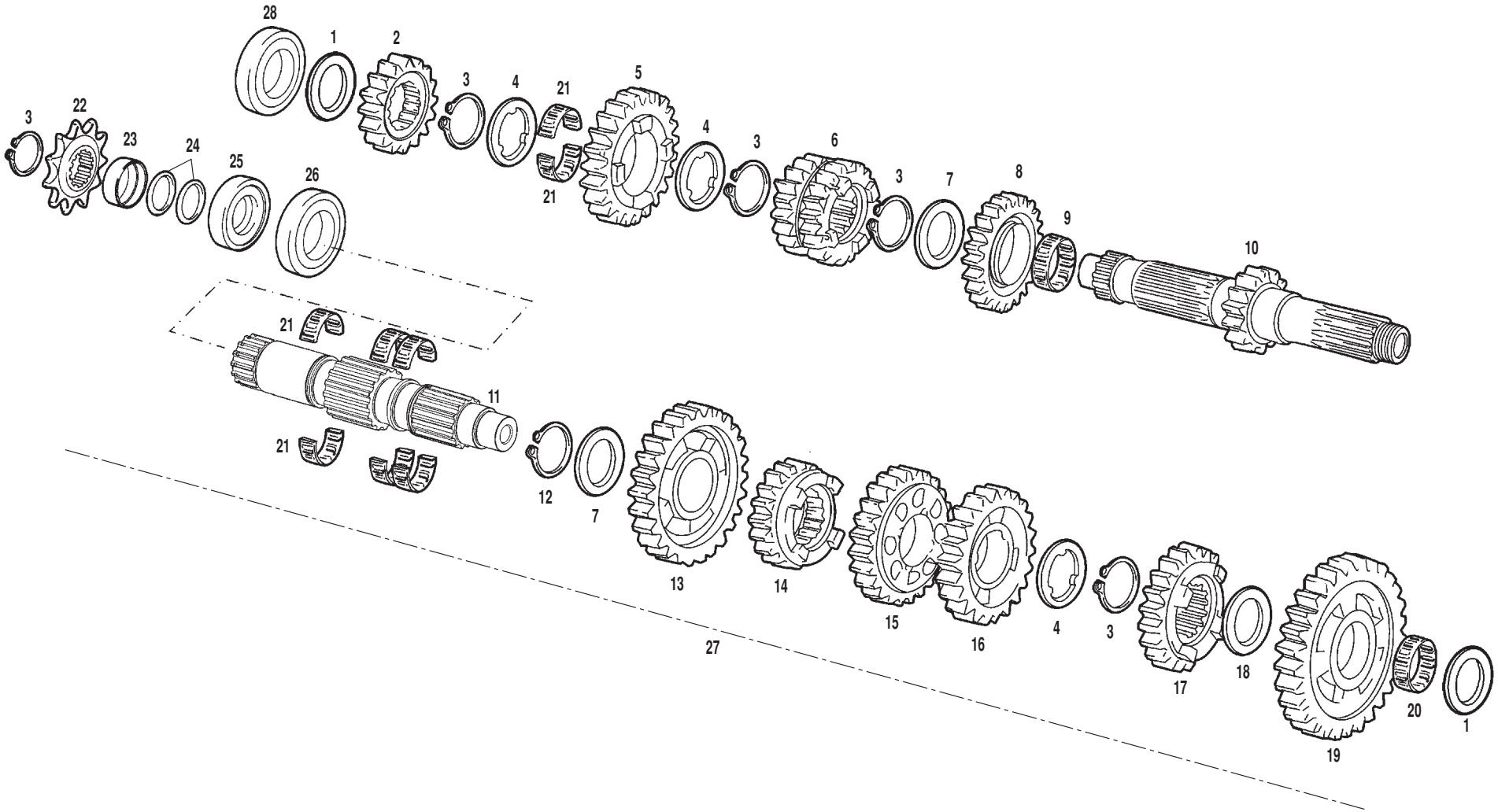
28
1
2
3
4
21
5
4
3
6
3
7
8
9
10
3
22
23
24
25
26
21
21
11
12
7
13
14
15
16
4
3
17
18
20
1
19
27

Nº	DESCRIPCION / *DESCRIPTION*	FSE 2004	Cant.
1	ARANDELA 18x40x0,6 / *18X40X0,6 WASHER*	MFS450336014	2
2	PIÑON PRIMARIO II / *PRIMARY II PINION*	ME25636071	1
3	CIRCLIP D.25 DIN 471 REBAJADO / *DIN 471 CIRCLIP*	ME25636084	5
4	ARANDELA 31,5x(25x22)x1 ESTRIADA / *31,5x(25x22)x1 GROOVING WASHER*	ME25636091	3
5	PIÑON PRIMARIO VI / *PRIMARY VI PINION*	ME25636074	1
6	PIÑON PRIMARIO III Y IV / *PRIMARY III AND IV PINION*	ME25636072	1
7	ARANDELA 25,2x31,5x1 CAMBIO / *25,2x31,5x1 GEAR WASHER*	ME25636017	2
8	PIÑON PRIMARIO V / *PRIMARY V PINION*	ME25636073	1
9	COJINETE AGUJAS K25-29-10 / *K25-29-10 NEEDLES BEARING*	M02616000	1
10	EJE PRIMARIO / *PRIMARY AXIS*	MFS450336070	1
11	EJE SECUNDARIO / *SECUNDARY AXIS*	MFS450336075	1
12	CIRCLIP D.25 DIN 983 / *DIN 983 CIRCLIP*	ME25636095	1
13	PIÑON SECUNDARIO II / *SECUNDARY II PINION*	ME25636077	1
14	PIÑON SECUNDARIO VI / *SECUNDARY VI PINION*	ME250136081	1
15	PIÑON SECUNDARIO III / *SECUNDARY III PINION*	ME25636078	1
16	PIÑON SECUNDARIO IV / *SECUNDARY IV PINION*	ME25636079	1
17	PIÑON SECUNDARIO V / *SECUNDARY V PINION*	ME25636080	1
18	ARANDELA 20,8x29x1 CAMBIO / *20,8x29x1 GEAR WASHER*	ME25636016	1
19	PIÑON SECUNDARIO I / *SECUNDARY I PINION*	ME25636076	1
20	RODAMIENTO AGUJAS K20x24x10 / *K20x24x10 NEEDLES BEARING*	ME25636059	1
21	RODAMIENTO AGUJAS K25x22x9,8 / *K25x22x9,8 NEEDLES BEARING*	ME250236102	8
22	PIÑON SALIDA Z. 13 / *Z13 EXIT PINION*	ME25636025	1
23	DOLLA RETEN SALIDA CAMBIO / *GEAR EXIT SEAL*	ME25636046	1
24	TORICA 25x2 NBR PIÑON SALIDA / *EXIT PINION SEAL*	ME25632025	2
25	RETEN 30X40X7 / *30X40X7 SEAL*	ME25636024	1
26	RODAMIENTO CAMBIO 6205 ZZ / *GEAR 6205 BEARING*	ME25636056	1
27	GRUPO CAMBIO COMPLETO / *GEAR SET*	MFS400136010	1
28	COJINETE 6305 2Z CAMBIO / *GEAR 6305 BEARING*	MFS400136167	1

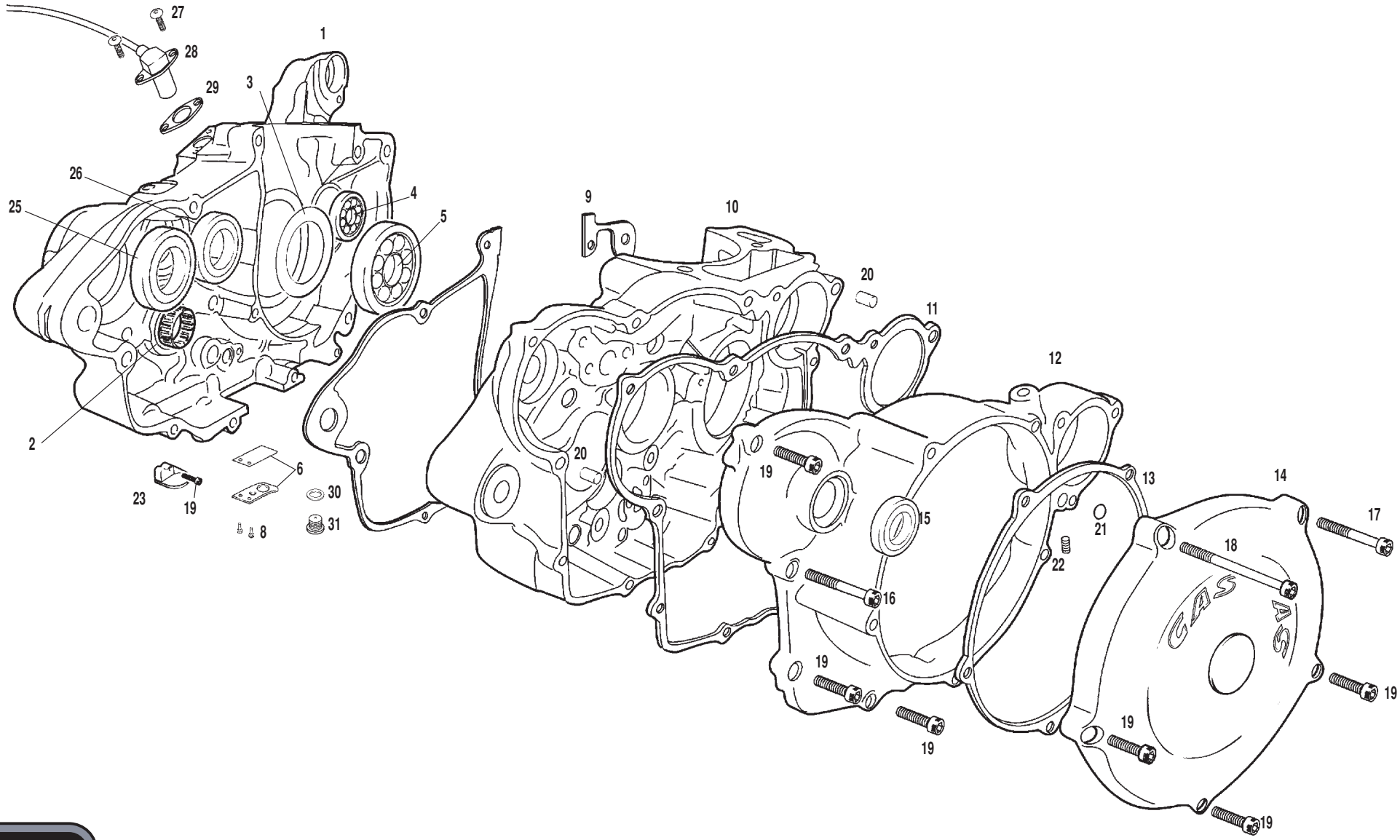
27
28
29
1
3
26
25
4
5
9
10
20
11
12
2
6
23
19
30
31
8
20
19
15
13
14
17
21
18
22
16
19
19
19
19
19

Nº	DESCRIPCION / *DESCRIPTION*	FSE 2004	Cant.
1	CARTER IZQUIERDO / *LEFT CARTER*	MFS400310001	1
2	RODAMIENTO HK2512 / *HK2512 BEARING*	ME25636055	1
3	ARANDELA OBTURACION / *WASHER*	MFS400112026	1
4	RODAMIENTO 6303 C3 / *6303 C3 BEARING*	MFS400112030	1
5	COJINETE 6306 C4 / *6306 C4 BEARING*	ME25612006/2	1
6	CTO. LÁMINAS OBTURACIÓN PASO ACEITE / *OIL OBTURATION REED KIT*	MFS400110120	1
8	ALLEN 6X20 / *6X20 ALLEN BOLT*	T0306020	2
9	JUNTA CARTER CENTRAL / *CENTRAL CRANKCASE GASKET*	MFS400144001	1
10	CARTER DERECHO / *RIGHT CRANKCASE*	MFS400310000	1
11	JUNTA TAPA EMBRAGUE / *CLUTCH COVER GASKET*	MFS400144002	1
12	TAPA EMBRAGUE / *CLUTCH COVER*	MFS400132001	1
13	JUNTA TAPA DISCOS EMBRAGUE / *DISCS COVER GASKET*	ME25644003	1
14	TAPA DISCOS EMBRAGUE / *DISCS CLUTCH COVER*	ME250332002	1
15	RETÉN 20/30/7/AI / *20/30/7/AI SEAL*	ME25632021	1
16	ALLEN 6X 30 / *6X30 ALLEN BOLT*	T0306030	1
17	ALLEN 6X 60 / *6X60 ALLEN BOLT*	T0306060	1
18	ALLEN 6X 75 / *6X75 ALLEN BOLT*	T0306075	1
19	ALLEN 6X 25 / *6X25 ALLEN BOLT*	T0306025	10
20	CASQUILLO CENTRADOR CARTER / *CRANKCASE BUSHING*	ME25610018	3
21	TORICA 6X2 EJE CENTR.VAL.ESCAPE / *6X2 O'RING*	ME25616045	1
22	TORNILLO ESPECIAL M6 / *M6 SPECIAL SCREW*	MFS400136065	1
23	CAMPANA ASPIRACIÓN ACEITE / *OIL ASPIRATE*	MFS400122550	1
25	COJINETE 6305 2ZC3 / *6305 2ZC3 BEARING*	MFS400136167	1
26	COJINETE 6203 2Z C3 / *6203 2Z C3 BEARING*	MFS400136168	1
27	ULS 5X9 / *5X9 ULS BOLT*	T0505009	2
28	SENSOR GIRO / *TURN SENSOR*	MFS400180005	1
29	JUNTA SENSOR GIRO / *TURN SENSOR GASKET*	MFS450344030	1
30	ARANDELA COBRE 12X18X1.5 / *12X18X1,5 WASHER*	ME25810030	1
31	TAPON VACIADO ACEITE CON IMAN / *OIL DRAIN CAP WITH MAGNET*	ME25610017	1

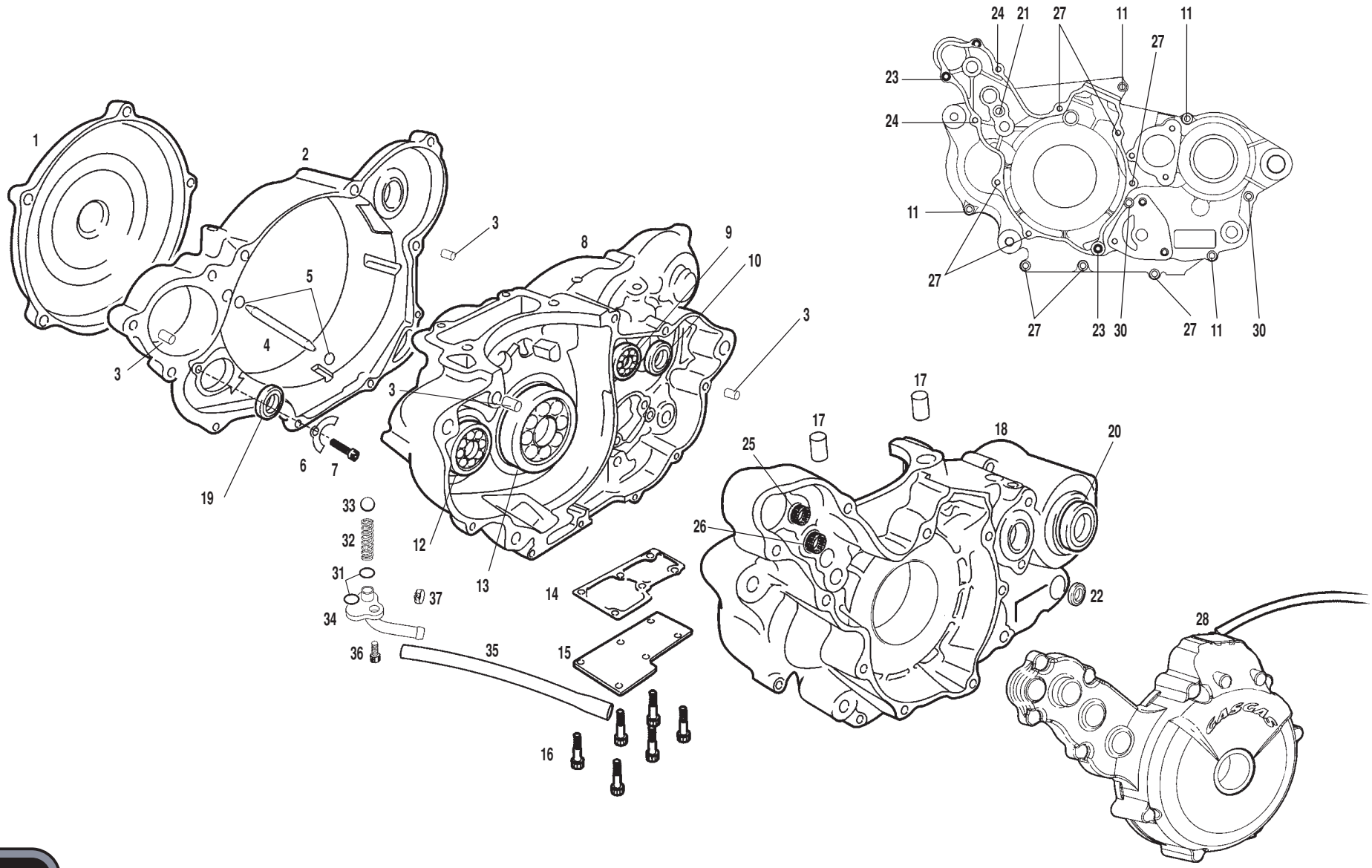
1
2
3
4
5
6
7
8
9
10
11
12
13
14
15
16
17
18
19
20
21
22
23
24
25
26
27
28
30
31
32
33
34
35
36
37
GASGAS

Nº	DESCRIPCION / *DESCRIPTION*	FSE 2004	Cant.
1	TAPA DISCOS EMBRAGUE / *CLUTCH DISCS COVER*	ME250332002	1
2	TAPA EMBRAGUE EC400 4T / *CLUTCH COVER*	MFS450332001	1
3	CASQUILLO CENTRADOR CARTER / *CRANKCASE BUSHING*	ME25610018	4
4	CONDUCTO ACEITE D.3X8 PISTON / *OIL PISTON PIPE*	MFS400110023	1
5	TORICA 18X3 / *O'RING*	MFS400126566	1
6	PLANCHA RETÉN CIGUEÑAL TAPA EMBRAGUE / *SEAL PLATE*	MFS400112019	1
7	ALLEN M5X10 / *5X10 ALLEN BOLT*	T0305010	1
8	CARTER DERECHO ALUMINIO EC400 4T / *RIGHT ALUMINIUM CRANKCASE*	MFS400310000	1
9	RODAMIENTO 6205 C3 NSK / *6205 C3 NSK BEARING*	ME25636056	1
10	RODAMIENTO 6203 2Z C3 SKF / *6203 2Z C3 SKF BEARING*	MFS400136168	1
11	ALLEN 6X35 / *6X35 ALLEN BOLT*	T0306035	4
12	RODAMIENTO 6303 C3 SKF / *6303 C3 SKF BEARING*	MFS400112030	1
13	RODAMIENTO 6306 C4 KOYO / *6306 C4 KOYO BEARING*	ME25612006/2	1
14	JUNTA TAPA ACCESO INFERIOR CARTER / *INFERIOR CRANKCASE COVER GASKET*	MFS400110123/2	1
15	TAPA ACCESO INFERIOR CARTER / *INFERIOR CRANKCASE COVER*	MFS400110122	1
16	ALLEN 6X16 / *6X16 ALLEN BOLT*	T0306016	6
17	CENTRADOR CULATA L18 EC400 4T / *CYL. HEAD BUSHING*	MFS400116066	2
18	CARTER IZQUIERDO ALUMINIO EC400 4T / *LEFT ALUMINIUM CRANKCASE*	MFS400310001	1
19	RETEN 24X14X7AS.P-NB / *SEAL*	MFS400112008	1
20	DOLLA RETEN SALIDA CAMBIO / *SEAL BUSHING*	ME25636046	1
21	ALLEN 6X70 / *6X70 ALLEN BOLT*	T0306070	1
22	RETEN TC12227 EJE SELECTOR / *SELECTOR AXIS SEAL*	ME25636048	1
23	ALLEN 6X30 / *6X30 ALLEN BOLT*	T0306030	2
24	ALLEN 6X25 / *6X25 ALLEN BOLT*	T0306025	2
25	JAULA DE AGUJAS HK0810 INA / *HK0810 NEEDLES BEARING*	MFS400126021	2
26	JAULA DE AGUJAS HK1010 INA / *HK1010 NEEDLES BEARING*	MFS400126022	2
27	ALLEN 6X45 / *6X45 ALLEN BOLT*	T0306045	8
28	TAPA VOLANTE MAGNÉTICO / *IGNITION COMP. COVER*	MFS400110004	1
29	ALLEN 6X50 / *6X50 ALLEN BOLT*	T0306050	4
30	ALLEN 6X60 / *6X60 ALLEN BOLT*	T0306060	2
31	TORICA 1.78x7.94 TAPA ENTRADA ACEITE CARTER / *1.78x7.94 O'RING*	MFS400122311	2
32	MUELLE RETORNO ACEITE EC400-4T / *SPRING*	MFS400122315	1
33	BOLA CENTRIFUGO EMB.DE 8 m/m. / *BALL*	ME25616033	1
34	TAPA ENTRADA ACEITE CARTER / *OIL INNER COVER*	MFS400122310	1
35	TUBO VACIADOR DEPOSITO ACEITE EC400-4T / *OIL HOSE*	MFS400122150	1
36	ALLEN 6X12 / *6X12 ALLEN BOLT*	T0306012	1
37	ABRAZADERA D.12.9-13.6 AMARILLA / *12.9-13.6 YELLOW CLAMP*	BE250210047	2

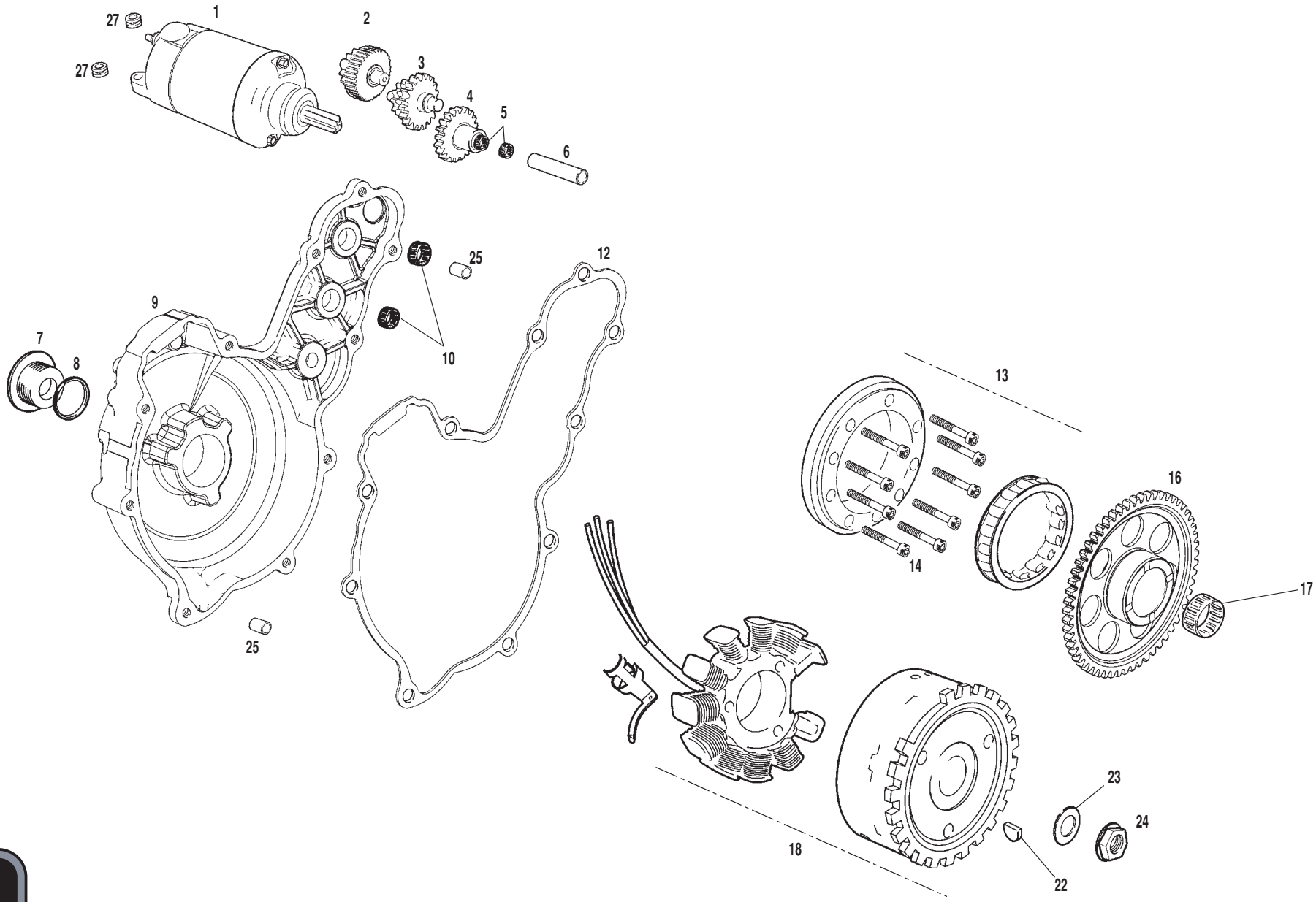
27
27
1
2
3
4
5
6
25
12
9
7
8
10
13
16
14
17
25
23
24
18
22

Nº	DESCRIPCION / *DESCRIPTION*	FSE 2004	Cant.
1	MOTOR ARRANQUE FSE450-2004 / *START ENGINE*	MFS450426500	1
2	PIÑON ARRANQUE ELECTRICO 36-13 / *PINION 1*	MFS450426510	1
3	PIÑON ARRANQUE ELECTRICO 19-12 / *PINION 2*	MFS450426520	1
4	PIÑON ARRANQUE ELECTRICO 20 / *PINION 3*	MFS400126530	1
5	COJINETE DE AGUJAS HK 1012 / *HK 1012 NEEDLES BEARING*	MFS400326023	2
6	EJE PIÑON ARRANQUE / *STARTER PINION AXIS*	MFS400126505	1
7	TAPON TAPA ENCENDIDO / *STARTER COVER TAP*	MFS400126562	1
8	TORICA 27.4x2.4 / *27.4x2.4 O'RING*	MFS400126563	1
9	TAPA ENCENDIDO / *STARTER COVER*	MFS450310004	1
10	JAULA DE AGUJAS HK1010 / *HK1010 NEEDLES BEARING*	MFS400126022	2
12	JUNTA TAPA ENCENDIDO / *IGNITION COVER GASKET*	MFS450444004	1
13	CTO. EMBRAGUE ARRANQUE / *IGNITION CLUTCH SET*	MFS450426550	1
14	ALLEN 8X14 / *8X14 ALLEN BOLT*	T0308014	9
16	CORONA DE ARRANQUE / *STARTER*	MFS400126540/2	1
17	COJINETE DE AGUJAS ARRANQUE / *INGITION NEEDLES BEARING*	MFS400126020	1
18	VOLANTE MAGNETICO / *MAGNETIC MOBILE*	MFS450434005	1
22	CHAVETA VOLANTE / *MOBILE PIN*	MFS400134016	1
23	ARANDELA TUERCA ALTERNADOR 12.25x27x2 / *12.25x27x2 WASHER*	MFS400134012	1
24	TUERCA VOLANTE / *MOBILE NUT*	MFS400134011	1
25	CASQUILLO CENTRADOR TAPA ENCENDIDO / *IGNITION COVER CENTRER*	MFS400116350	2
27	CASQUILLO SOPORTE RADIADOR / *RUBBER BUSHING*	R233000	2

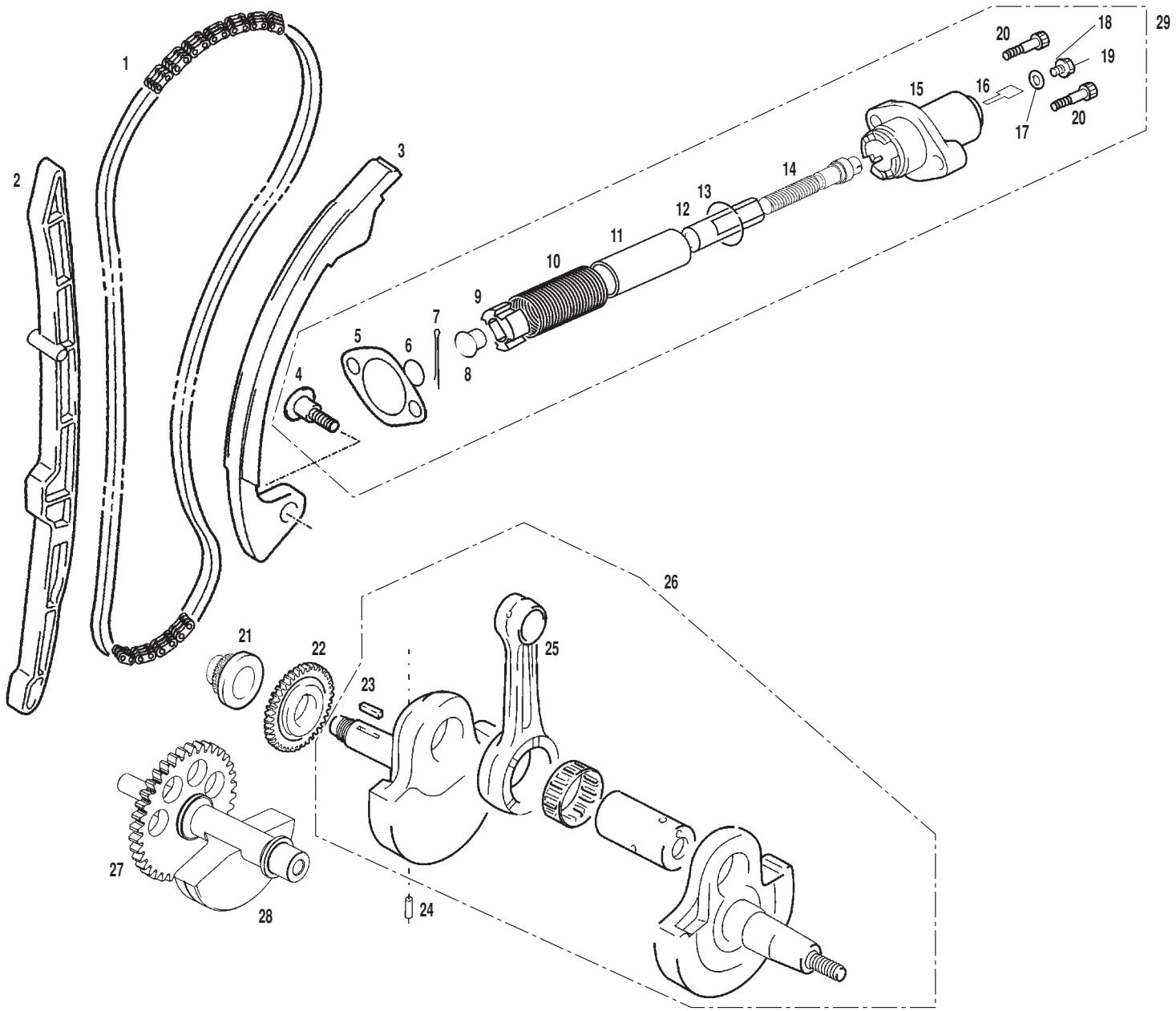
1
2
3
4
5
6
7
8
9
10
11
12
13
14
15
16
17
18
19
20
20
21
22
23
24
25
26
27
28
29

Nº	DESCRIPCION / *DESCRIPTION*	FSE 2004	Cant.
1	CADENA DISTRIBUCIÓN / *CAM SHAFT DRIVE CHAIN*	MFS400116360	1
2	GUÍA CADENA DISTRIBUCIÓN DELANTERA / *CAM CHAIN GUIDE*	MFS400116364	1
3	GUÍA CADENA DISTRIBUCIÓN TRASERA / *CAM CHAIN TENSIONER*	MFS400116363	1
4	TORNILLO FIJACIÓN PAT. GUIA CADENA DISTRIUCIÓN / *CHAIN GUIDE SCREW*	MFS400116365	1
5	JUNTA TENSOR DISTRIBUCION EC400-4T / *CHAIN TENSOR GASKET*	MFS400144025	1
6	ANILLO ELASTICO TENSOR CADENA EC400-4T / *CHAIN TENSOR O'RING*	MFS400116411	1
7	PASADOR ELÁSTICO D2X12 EC400 / *ELASTIC PIN*	MFS400116409	1
8	APRETADOR TENSOR CADENA DISTRIBUCIÓN / *CHAIN TENSOR PUSHER*	MFS400116403	1
9	CRUZ TENSOR CADENA DISTRIBUCIÓN / *CHAIN TENSOR BUSHING*	MFS400116402	1
10	MUELLE TORSIÓN TENSOR CADENA / *CHAIN TENSOR SPRING*	MFS400116410	1
11	TUBO TENSOR CADENA DISTRIBUCIÓN / *CAM SHAFT CHAIN TENSOR HOSE*	MFS400116404	1
12	TUERCA EMPUJADOR TENSOR CADENA / *CHAIN TENSOR PUSHER WASHER*	MFS400116405	1
13	ANILLO ELÁSTICO TENSOR CADENA / *CHAIN TENSOR ELASTIC RING*	MFS400116411	1
14	TORNILLO EMPUJADOR TENSOR CADENA / *CHAIN TENSOR PUSHER BOLT*	MFS400116406	1
15	TENSOR CADENA DISTRIBUCIÓN / *CHAIN TENSOR*	MFS400116400	1
16	PLACHA FRENADO TENSOR CADENA / *CHAIN TENSOR LOCK*	MFS400116408	1
17	ARANDELA CLINGERIT 6X15X0.5 / *6X15X0.5 WASHER*	MFS400116407	1
18	ARANDELA 6X12X2 / *6X12X2 WASHER*	T4006013	1
19	TORNILLO HEXAGONAL 6X8 / *HEXAGONAL BOLT 6X8*	T0106008	1
20	ALLEN 6X25 / *6X25 ALLEN BOLT*	T0306025	1
21	PIÑON CADENA DISTRIBUCIÓN / *CAM CHAIN DRIVE SPROCKET*	MFS400116361	1
22	ENGRANAJE ARBOL DE LEVAS 400 4T / *CAMSHAFT SPROCKET*	MFS400116370	1
23	CHAVETA LADO EMBRAGUE EC400 4T / *GEAR KEY*	MFS400112010	1
24	AGUJA 5X8 CIGUEÑAL / *PIN*	MFS400112022	1
25	CONJUNTO BIELA / *CONNECTING ROD*	MFS400112100	1
26	CONJUNTO CIGUEÑAL / *CRANKSHAFT SET*	MFS400112000	1
27	PIÑON EJE DE BALANCE / *DRIVE GEAR*	MFS400112002	1
28	EJE BALANCE / *CRANK BALANCER*	MFS450312003	1
29	CONJUNTO TENSOR CADENA / *CHAIN TENSION ADJUSTER SET*	MFS400116420	1

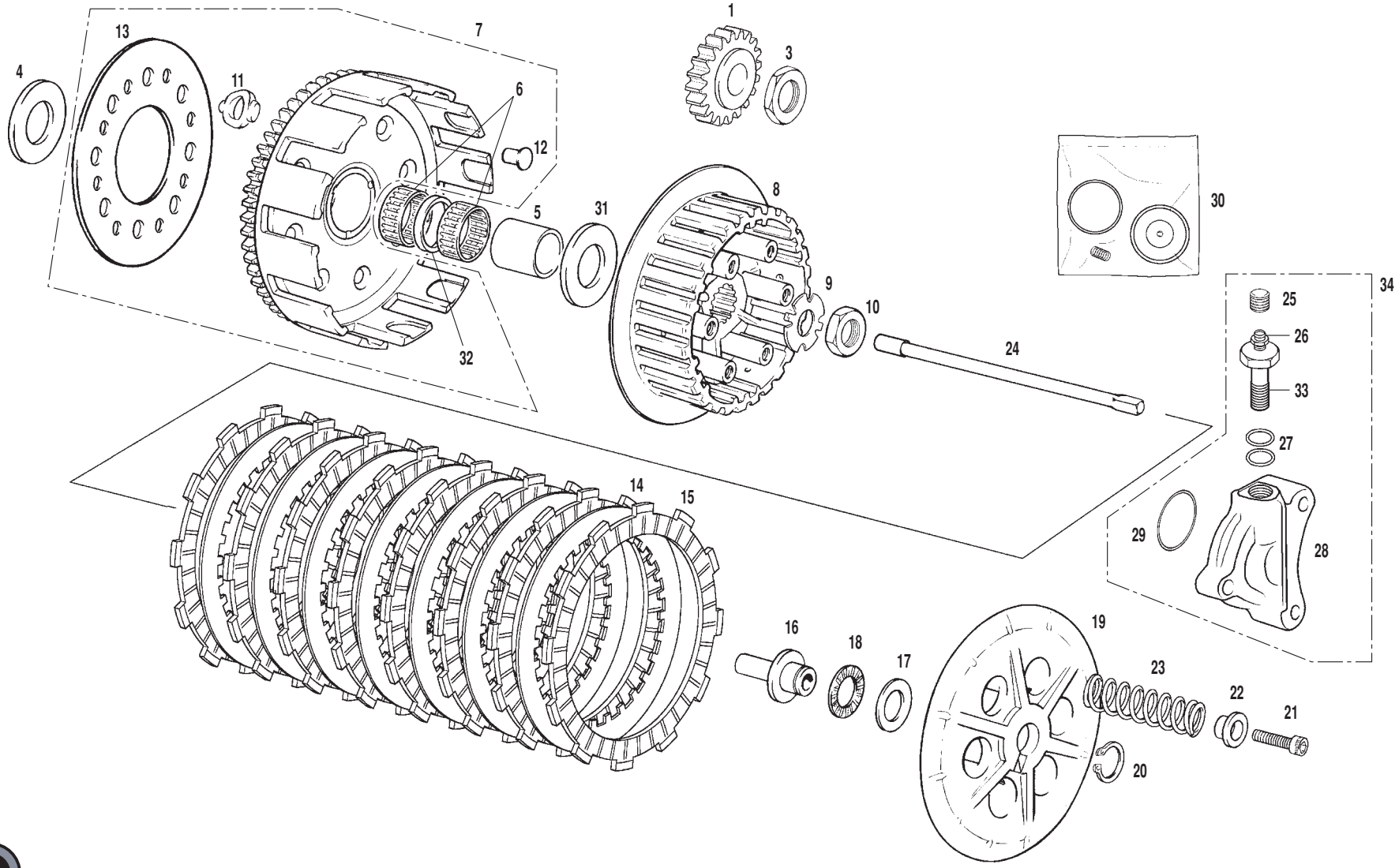
1
3
4
13
7
11
6
12
8
5
31
30
9
10
24
34
25
26
33
27
32
14
15
29
28
16
18
17
19
23
22
21
20

Nº	DESCRIPCION / *DESCRIPTION*	FSE 2004	Cant.
1	PIÑON CIGÜEÑAL TRANS PRIMARIA / *PRIM.TRANS. CRANK SHAFT PIN.*	MFS400112004	1
3	TUERCA BLOCAJE PIÑON CIGÜEÑAL / *CRANK SHAFT PINION LOCKING NUT*	ME25632018	1
4	ARANDELA CAMPANA EMBR. / *WASHER*	MFS400132011	1
5	CASQUILLO CAMPANA EMBRAGUE / *PRIMARY DRIVEN GEAR BUSHING*	MFS400132012	1
6	COJINETE CAMPANA EMBRAGUE / *PRIMARY DRIVEN GEAR BEARING*	ME25632029	2
7	CTO. CORONA EMBRAGUE / *PINION SET*	MFS400132003	1
8	CUBO EMBRAGUE / *CLUTCH BOSS*	ME25632005	1
9	ARANDELA PRECINTO EMBRAGUE / *CLUTCH LOCK WASHER*	ME25632022	1
10	TUERCA FIJACIÓN CUBO EMBRAGUE / *CLUTCH BOSS NUT*	ME25632028	1
11	SILENTBLOCK CORONA / *SILENTBLOCK*	ME20932008	8
12	REMACHE CAMPANA EMBRAGUE / *PRIMARY DRIVEN GEAR RIVETS*	ME250132010	8
13	ARANDELA CORONA EMBRAGUE / *CLUTCH BOSS WASHER*	MFS400132009	1
14	DISCO EMBRAGUE HIERRO / *IRON CLUTCH DISK*	ME25632037	7
15	DISCO EMBRAGUE FORRADO / *COVERED CLUTCH DISK*	ME25632007	8
16	BOLET EMBRAGUE / *CLUTCH PIN*	ME25632014	1
17	ARANDELA COJINETE / *BEARING WASHER*	ME25632016	1
18	JAULA AGUJA VALVULA ESCAPE / *NEEDLES BEARING*	ME25632046	1
19	PRENSA EMBRAGUE 4898A / *PRESSURE PLATE BEARING*	ME25632006	1
20	SEEGER EJE 15 EMBRAGUE / *CLUTCH SEEGER AXLE 15*	ME25632017	1
21	ALLEN 6X20 / *ALLEN BOLT 6X20*	T0306020	6
22	CASQUILLO MUELLE EMBRAGUE ALUMINIO / *ALUMINIUM CLUTCH SPRING BUSHING*	ME250032020	6
23	MUELLE EMBRAGUE / *CLUTCH SPRING*	MFS450332015	6
24	VARILLA EMBRAGUE / *CLUTCH ROD*	MFS400132040/2	1
25	TAPÓN SANGRADOR / *BLEEDER CAP*	BE25622055	1
26	SANGRADOR PINZA EMBRAGUE / *BLEEDER*	BE25622060	1
27	ARANDELA LATIGUILLO / *HOSE WASHER*	BE25622007	2
28	PINZA EMBRAGUE HIDRÁULICO / *HYDRAULIC CLUTCH CALIPER*	ME25632026	1
29	TORICA BOMBA EMBRAGUE / *CLUTCH PUMP O'RING*	ME25632024	1
30	KIT REPARACIÓN PINZA EMBRAGUE / *CLUTCH CALIPER KIT*	BE25622050	1
31	ARANDELA CAMPANA EMBRAGUE ENDURO 2T / *CLUTCH 2T BELL WASHER*	ME25632011	1
32	CASQUILLO COJINETE CAMPANA EMBRAGUE / *BUSHING BEARING*	MFS400132036	1
33	RACORD PINZA EMBRAGUE / *RACORD CLUTCH CALIPER*	M01030000	1
34	CONJUNTO PINZA EMBRAGUE FSE / *FSE CLUTCH CALIPER KIT*	MFS400132026	1

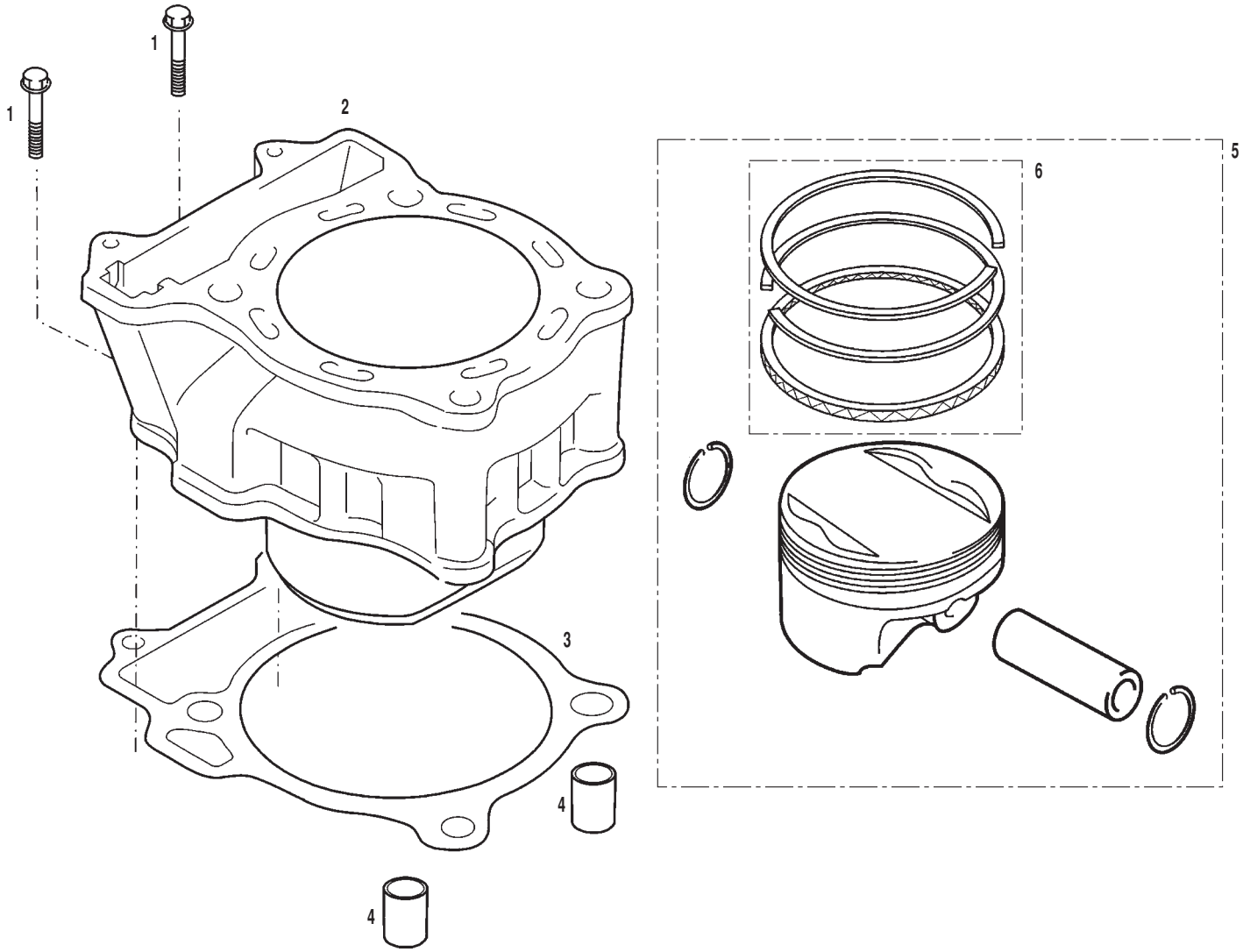
1
1
2
3
4
4
5
6

Nº	DESCRIPCION / *DESCRIPTION*	FSE 400	FSE 450	Cant.
1	TORNILLO ESPECIAL 6X25 / *6X25 SPECIAL SCREW*	T0606025		2
2	CILINDRO EC 4T / *EC4T CYLINDER*	MFS400116022	MFS450316022	1
3	JUNTA CILINDRO EC 4T / *EC 4T CLINDER GASKET*	MFS400144000		1
4	CASQUILLO CENTRADOR CULATA / *HEAD CYLINDER BUSHING*	MFS400116066		2
5A	CONJUNTO PISTON A / A *PISTON SET*	MFS400116020	MFS450316020	1
5B	CONJUNTO PISTON B / B *PISTON SET*	MFS400116121	MFS450316121	1
5C	CONJUNTO PISTON C / C *PISTON SET*	MFS400116122	MFS450316122	1
5D	CONJUNTO PISTON D / D *PISTON SET*	MFS400116123	MFS450316123	1
6	CONJUNTO AROS PISTON / *PISTON O'RING SET*	MFS400116040	MFS450316040	1

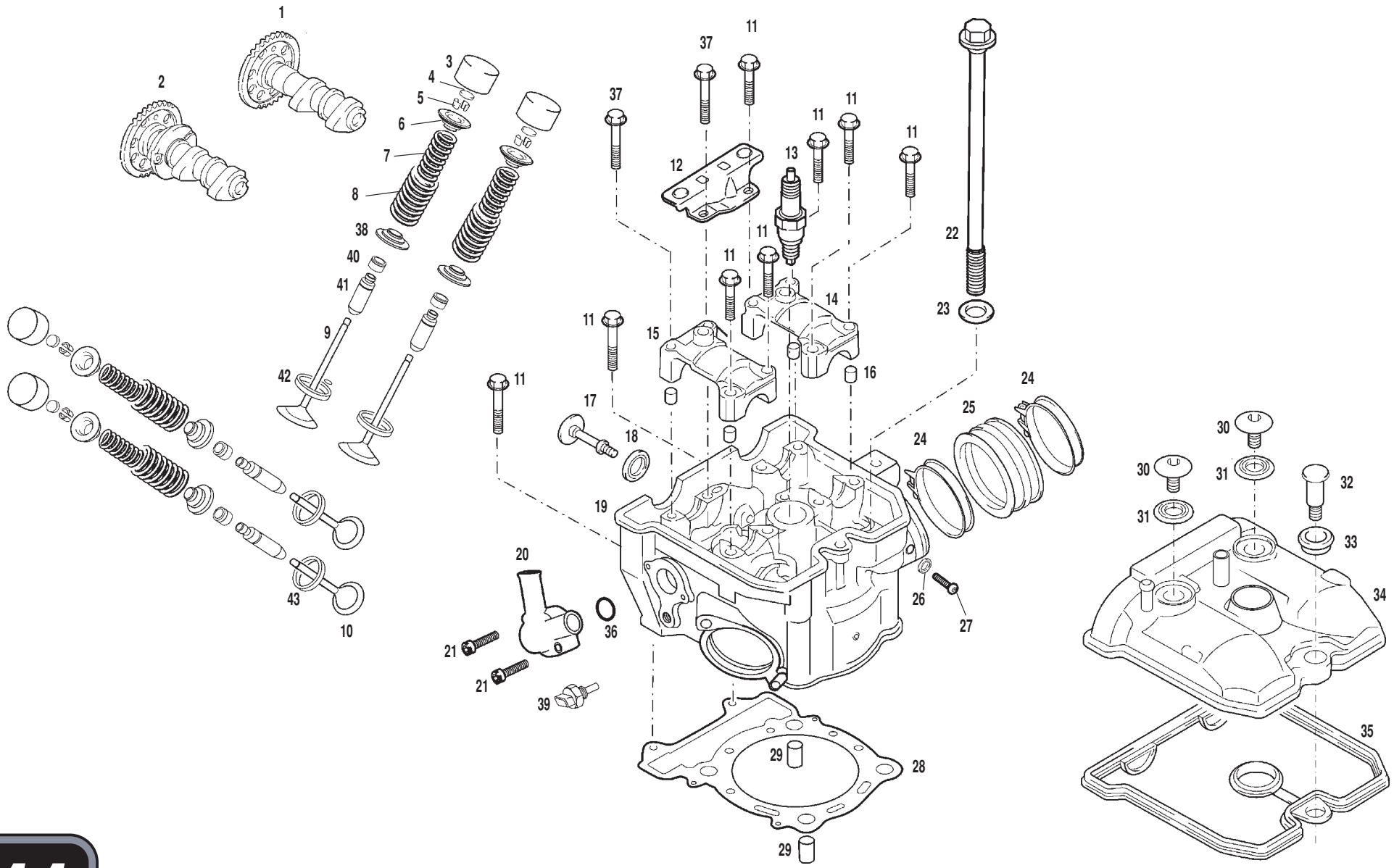
1
2
3
4
5
6
7
8
38
40
41
9
42
43
10
37
37
11
11
11
11
11
11
11
11
12
13
14
15
16
17
18
19
20
21
21
39
36
22
23
24
24
25
26
27
28
29
29
30
30
31
31
32
33
34
35

Nº	DESCRIPCION / *DESCRIPTION*	FSE 400	FSE 450	Cant.
1	ARBOL DE LEVAS ADMISION / *INTAKE CAMSHAFT*	MFS400116353		1
2	ARBOL DE LEVAS ESCAPE / *EXHAUST CAMSHAFT*	MFS400116354		1
3	VASO EMPUJADOR VÁLVULA / TAPPET	MFS400116300		4
4	PASTILLA REGLAJE BASE VÁLVULA / *TAPPET SHIM*	MFS400116044		4
5	SEMICONO / *VALVE COTTER*	MFS400116048		8
6	PLATILLO SEMICONO / *SPRING RETAINER*	MFS400116047		4
7	MUELLE INTERIOR / *INTERIOR VALVE SPRING*	MFS400116059		4
8	MUELLE VALVULA EXTERIOR / *EXTERIOR VALVE SPRING*	MFS400116058		4
9	VÁLVULA ADMISION / *INTAKE VALVE*	MFS400116043		2
10	VÁLVULA ESCAPE / *EXHAUST VALVE*	MFS400116015		2
11	TORNILLO 6X40 / *6X40 BOLT*	MFS400116351		8
12	GUÍA CADENA DISTRIBUCION SUPERIOR / *UPPER CAM SHAFT GUIDE*	MFS400116362/2		1
13	BUJIA NGK CR8 E / *NGK CR8 E SPARK PLUG*	MFS400134000		1
14	PUENTE ARBOL LEVAS ADMISON / *INTAKE CAM SHAFT JOURNAL HOLDER*	MFS400116357		1
15	PUENTE ARBOL LEVAS ESCAPE / *EXHAUST CAM SHAFT JOURNAL HOLDER*	MFS400116358		1
16	CASQUILLO CENTRADOR TAPA ARBOL LEVAS / *PIN*	MFS400116350		4
17	TORNILLO ESPECIAL CULATA M7 / *CYLINDER HEAD SPECIAL SCREW*	MFS400116067		1
18	ARANDELA CULATA 11X25X4.5 / *11X25X4.5 CYLINDER HEAD WASHER*	T4001126		1
19	CULATA / *CYLINDER HEAD*	MFS400116000		1
20	TUBERA SALIDA AGUA CULATA / *THERMOSTAT COVER*	MFS400116104		1
21	ALLEN NEGRO 5X30 / *5X30 BLACK ALLEN BOLT*	T0305030N		2
22	TORNILLO M10X175 / *M10X175 BOLT*	T0201070		1
23	ARANDELA 10.5X19X2 / *10.5X19X2 WASHER*	T4001019		1
24	ABRAZADERA 40-60 / *40-60 CLAMP*	BE25610033		2
25	TUBERA ADMISION / *INTAKE*	MFS400116131		1
26	ARANDELA 8X16X1,5 / *8X16X1,5 WASHER*	T4008016		1
27	ULS 8X12 / *8X12 ULS BOLT*	T0508012		1
28	JUNTA CULATA / *CYLINDER HEAD GASKET*	MFS400144020	MFS450344020	1
29	CASQUILLO CENTRADOR CULATA / *CYLINDER HEAD BUSHING*	MFS400116066		2
30	TORNILLO ESPECIAL 7X17.5 / *7X17.5 SPECIAL SCREW*	T0207017		2
31	ARANDELA TAPA CULATA 11X25X2 / *11X25X2 WASHER*	T4001125		2
32	TORNILLO ESPECIAL 7X31 / *7X31 SPECIAL SCREW*	T0207031		1
33	ARANDELA TAPA CULATA 12X23X5/7.5 / *12X23X5/7.5 CYLINDER HEAD WASHER*	T4001223		1

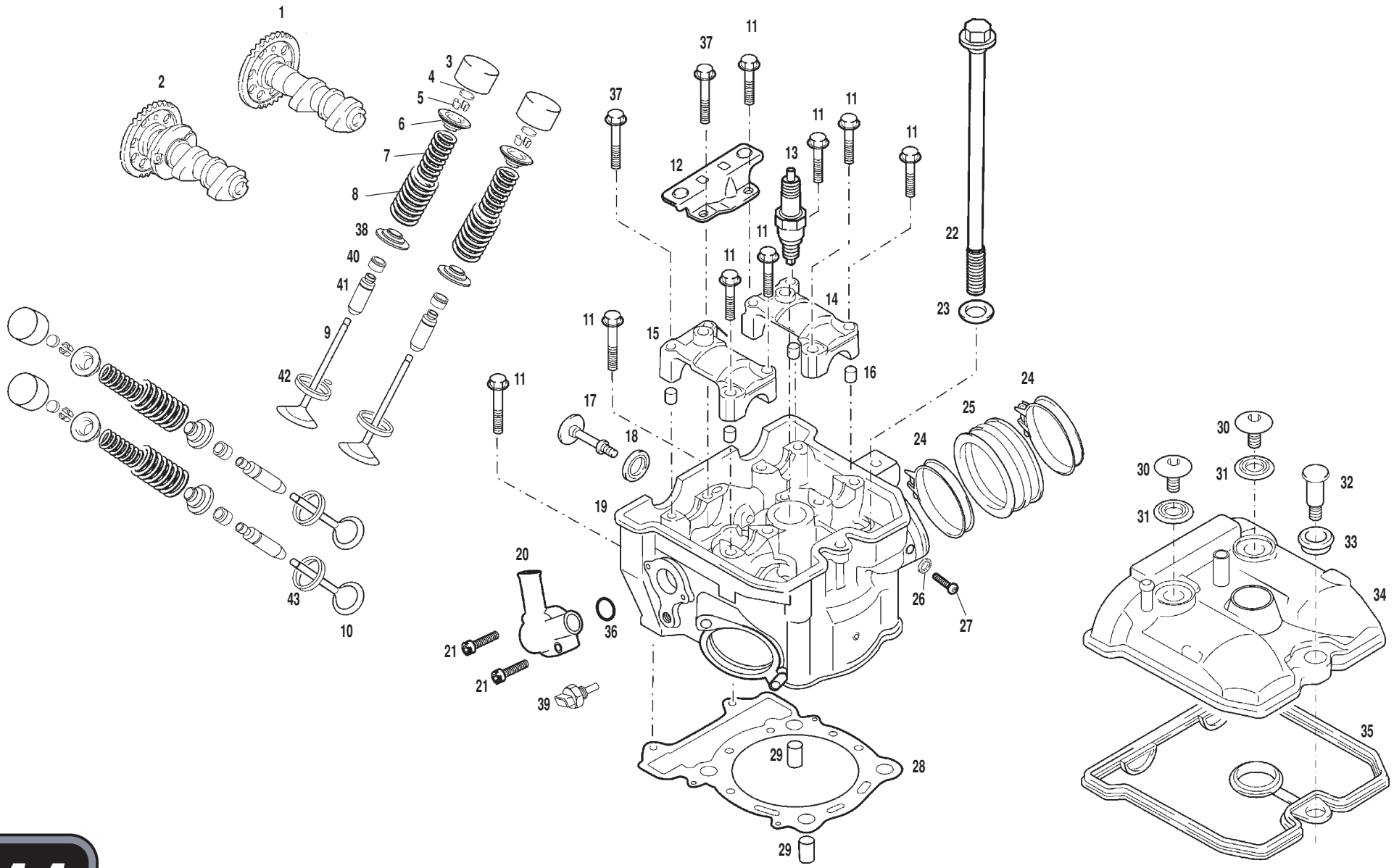
1
2
3
4
5
6
7
8
38
40
41
9
42
43
10
37
37
11
11
11
11
11
11
11
11
12
13
14
15
16
17
18
19
20
21
21
39
36
22
23
24
24
25
26
27
28
29
29
30
30
31
31
32
33
34
35

Nº	DESCRIPCION / *DESCRIPTION*	FSE 2004	Cant.
34	TAPA CULATA / *CYLINDER HEAD*	MFS450416100	1
35	JUNTA TAPA CULATA / *CYLINDER HEAD GASKET*	MFS400144015	1
36	TORICA 24X2 TUBERA SALIDA AGUA CULATA / *WATER EXIT GASKET*	MFS400116105	1
37	TORNILLO M6X45 TAPA ARBOL LEVAS LARGO / *6X45 SCREW*	MFS400116352	2
38	ARANDELA MUELLE VÁLVULA / *SPRING SEAT WASHER*	MFS400116049	4
39	SENSOR AGUA / *WATER SENSOR*	MFS400180004	1
40	RETEN VALVULA / *VALVE SEAL*	MFS400116039	4
41	GUIA VALVULA / *VALVE GUIDE*	MFS400116046	4
42	ASIENTO VALVULA ADMISION / *INTAKE VALVE BASE*	MFS400116143	2
43	ASIENTO VALVULA ESCAPE / *EXHAUST VALVE BASE*	MFS400116144	2

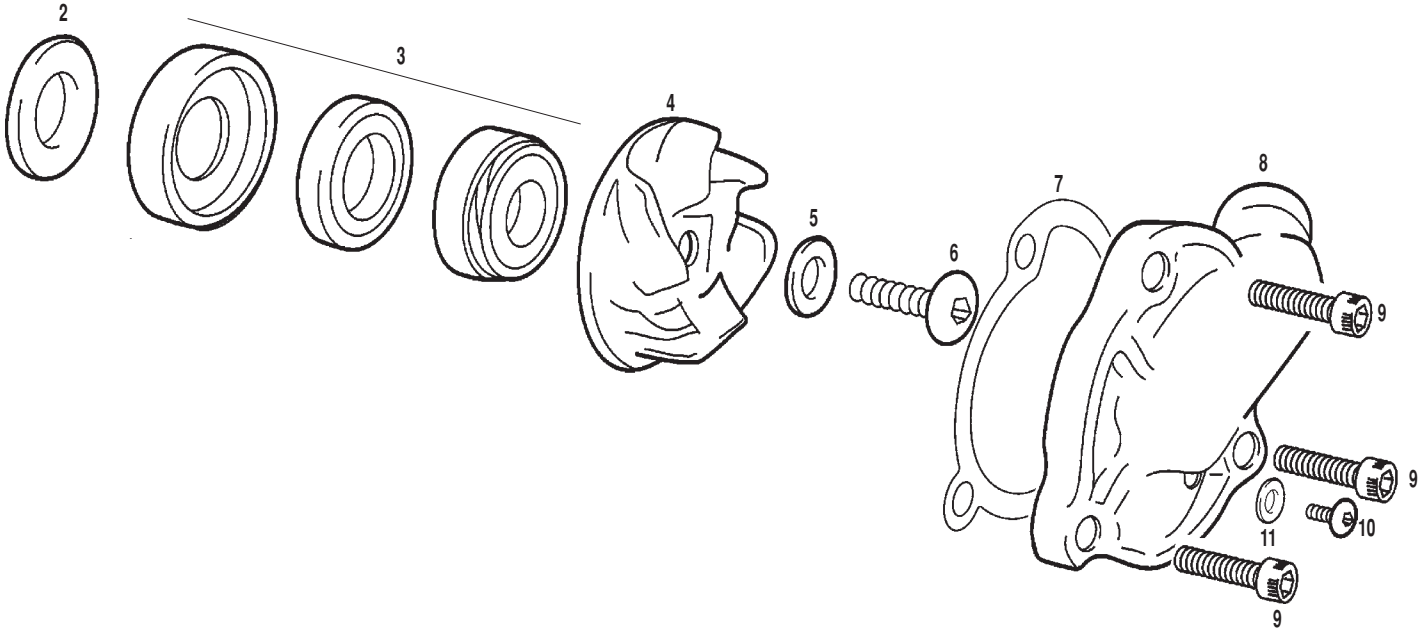
2
3
4
5
6
7
8
9
9
9
10
11

Nº	DESCRIPCION / *DESCRIPTION*	FSE 2004	Cant.
2	ARANDELA 25.8x17.5x0.5 BOMBA AGUA / *25.8x17.5x0.5 WASHER*	M03625000	1
3	JUEGO RETENES / *SEAL SET*	ME25610011	1
4	TURBINA BOMBA AGUA / *WATER PUMP IMPELLER*	MFS450410007	1
5	ARANDELA 6X10X1 / *6X10X1 WASHER*	T4005010	1
6	ALLEN 6X16 / *6X16 ALLEN BOLT*	T0506016	1
7	JUNTA TAPA BOMBA AGUA / *WATER PUMP COVER GASKET*	MFS400144008	1
8	TAPA BOMBA AGUA / *WATER PUMP COVER*	MFS250210008	1
9	ALLEN 6X20 / *6X20 ALLEN BOLT*	T0306020	3
10	ULS 6X10 / *6X10 ULS*	T0506010	1
11	ARANDELA FIBRA 6MM. / *6MM WASHER*	T4006010	1

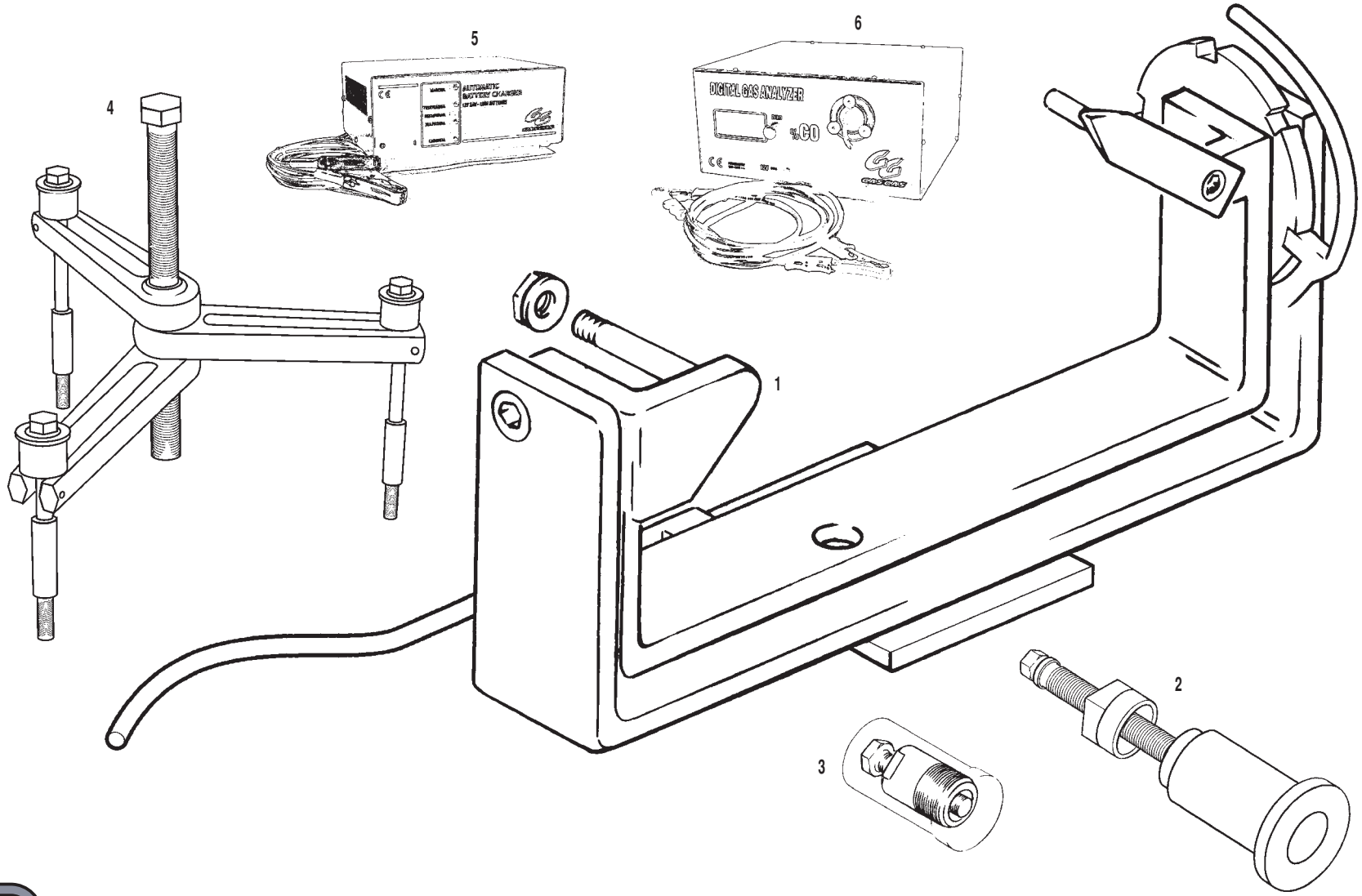
5
6
4
DIGITAL GAS ANALYZER
%CO
1
2
3

Nº	DESCRIPCION / *DESCRIPTION*	FSE 2004	Cant.
1	BANCADA MONTAJE MOTOR / *ENGINE ASSEMBLY HOLDER*	BT27950050	1
2	EXTRACTOR COJINETE CIGUEÑAL / *BEARING EXTRACTOR*	ME25950000	1
3	EXTRACTOR VOLANTE / *FLYWHEEL EXTRACTOR*	MFS400134045	1
4	EXTRACTOR CARTER / *CRANKCASE EXTRACTOR*	ME25950005	1
5	ANALIZADOR DE GASES C0 GAS01 / *GAS SCANNER*	MFS450380117	1
6	CARGADOR DE BATERÍA GAS02 / *BATTERY CHARGER*	MFS450380118	1

GAS GAS

ENERO 2003

PU010338015

GAS GAS MOTOS, S.A.
CIF: ES/A-17070921
C/ UNICEF nº 17 · Poligon Industrial Torremirona · **17190** Salt (Girona) SPAIN · **Tel**: +34 902 47 62 54 **Fax**: +34 902 47 61 60
E-mail: officegg@gasgasmotos.es / partsgg@gasgasmotos.es · **Web**: www.gasgasmotos.es