GASGAS

2011

EC-2T

125-200
250-300

DESPIECE / / PART LIST

TECHNOLOGY & MOTION

GASGAS

AGOSTO / AUGUST / AOUT / AGOSTO / AUGUST 2010

125cc.

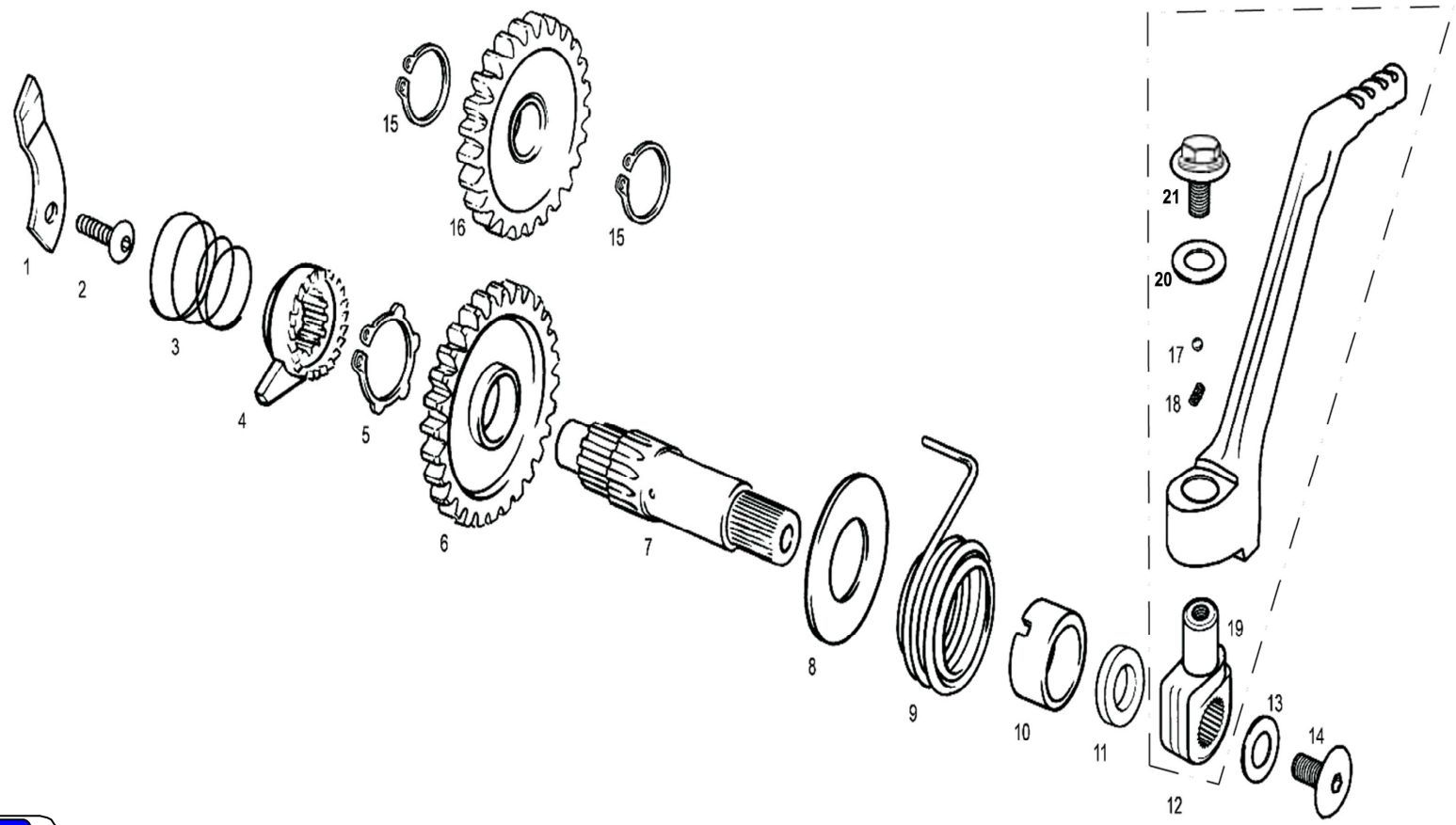

Nº	DESCRIPCION / DESCRIPTION	125	Cant.
1	PLATINA TRINQUETE ARRANQUE / KICKSTART RATCHET BRACKET	ME120136005	1
2	TORNILLO UFK M5X12 / M5X12 UFK BOLT	T0315012	1
3	MUELLE TRINQUETE ARRANQUE / RATCHET PINION SPRING	ME25636006	1
4	TRINQUETE ARRANQUE EC125 / KICKSTART RATCHET PINION	ME120126004	1
5	SEEGER E20 DIN 983 / START SEEGER 20	MT27836052	1
6	PIÑÓN ARRANQUE / STARTING PINION	MT27836002	1
7	EJE ARRANQUE CON AGUJERO EC125 / KICKSTARTER SHAFT	ME120136003	1
8	ARANDELA ARRANQUE 46X18.6X1 / KICKSTART INNER PINION	M02614002	1
9	MUELLE ARRANQUE / KICKSTART SPRING	M02613001	1
10	CASQUILLO CENTRADOR MUELLE ARRANQUE / KICKSTART RATCHET BRACKET	ME250136053	1
11	RETÉN PEDAL ARRANQUE 18x28x7 / 18x28x7 KICKSTART PEDAL SEAL	ME120132021	1
12	CTO. PEDAL ARRANQUE Y MUÑEQUILLA / KICKSTART PEDAL SET	ME120136060	1
13	ARANDELA 6X20X1.5 / WASHER 6X20X1.5	T4006020	1
14	TORNILLO 6X12 CABOTA TORK / TORK SCREW 6X12	T0316012	1
15	SEEGER EJE 15 EMBRAGUE / CLUTCH AXLE SEEGER 15	M02623000	2
16	PIÑÓN INTERIOR ARRANQUE EC125 / KICKSTART INNER PINION	ME120126001	1
17	BOLA MUÑEQUILLA PEDAL ARRANQUE / KICKSTART PEDAL BASE BALL	ME250036062	1
18	MUELLE MUÑEQUILLA PEDAL ARRANQUE / KICKSTART PEDAL BASE SPRING	ME250036066	1
19	MUÑEQUILLA PEDAL ARRANQUE / KICKSTART PEDAL BASE	ME120136061	1
20	TORICA TORN. PEDAL ARRANQUE / TORIC SCREW STARTER PEDAL	ME250036063	1
21	TORN. PEDAL ARRANQUE / SCREW STARTER PEDAL	ME250036062	1

200cc. / 250cc. / 300cc.

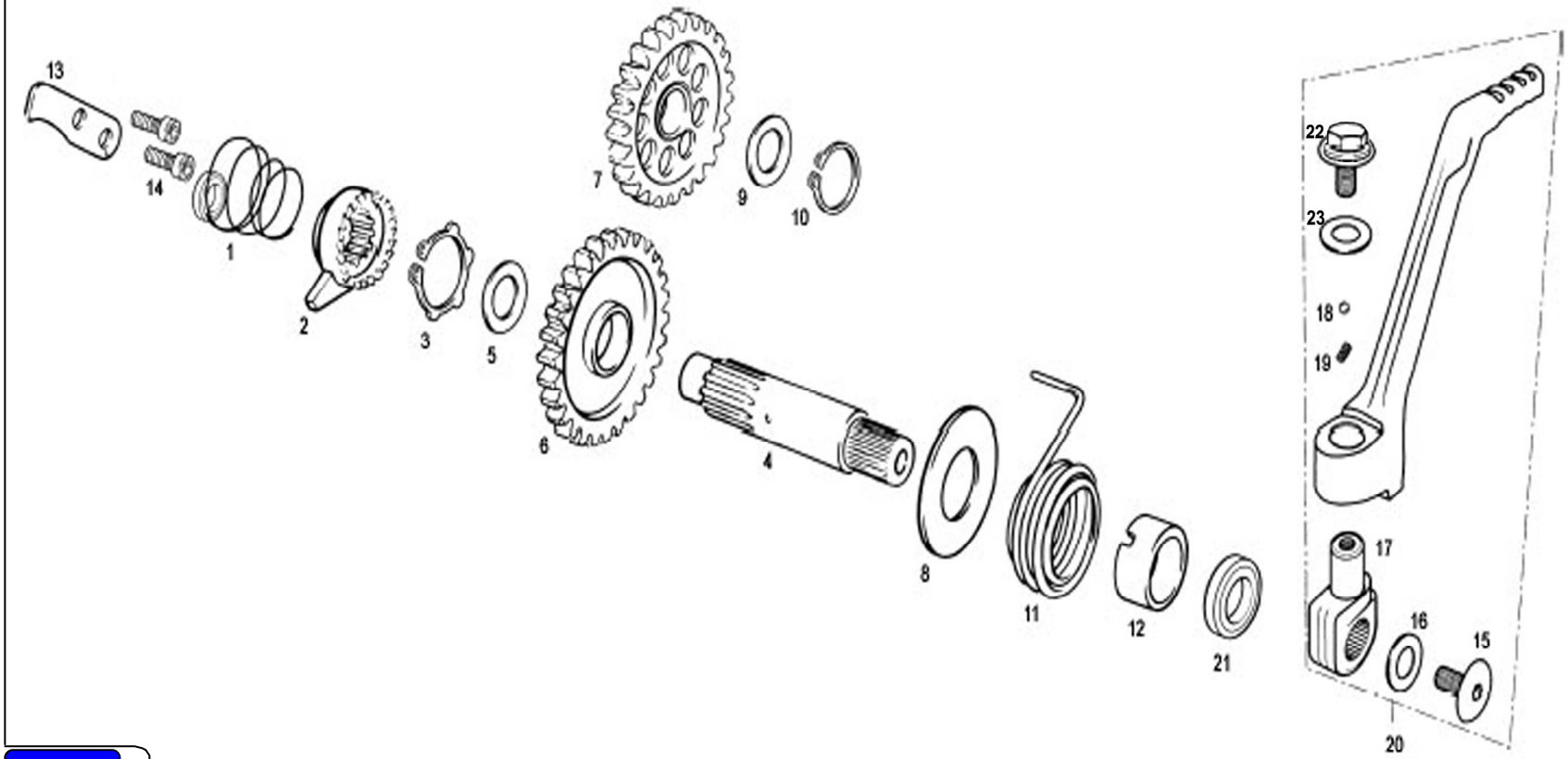

Nº	DESCRIPCION / DESCRIPTION	200/250/300	Cant.
1	MUELLE TRINQUETE ARRANQUE / RATCHET PINION SPRING	ME25636006	1
2	TRINQUETE ARRANQUE / KICKSTART RATCHET PINION	ME120126004	1
3	SEEGER DE 20 ARRANQUE / START SEEGER 20	ME25636052	1
4	EJE ARRANQUE / KICKSTARTER SHAFT	ME250126003	1
5	ARANDELA TOPE 27X20,2X1 DESP. ARRANQUE / END WASHER 27X20.2X1	ME25636000	1
6	PIÑÓN ARRANQUE / STARTING PINION	ME250126002	1
7	PIÑÓN INTERMEDIO ARRANQUE / KICKSTART INNER PINION	ME880002508	1
8	ARANDELA ARRANQUE 20X40X1 / KICKSTART WASHER 20X40X1	ME25636051	1
9	ARANDELA PIÑÓN ARRANQUE 24X15,15X0,8 / WASHER 24.15.15X0.8	ME25636012	1
10	SEEGER EJE 15 EMBRAGUE / CLUTCH AXLE SEEGER 15	ME25632017	1
11	MUELLE ARRANQUE / KICKSTART SPRING	ME25636007	1
12	CASQUILLO CENTRADOR MUELLE ARRANQUE / KICKSTART SPRING BUSHING	ME250136053	1
13	PLATINA TRINQUETE ARRANQUE / KICKSTART RATCHET BRACKET	ME25636005	1
14	ALLEN 5X15 / ALLEN BOLT 5X15	T0305015	2
15	TORNILLO 6X12 CABOTA TORK / TORK SCREW 6X12	T0316012	1
16	ARANDELA 6X20X1.5 / WASHER 6X20X1.5	T4006020	1
17	MUÑEQUILLA PEDAL ARRANQUE / KICKSTART PEDAL BASE	ME250036061	1
18	BOLA MUÑEQUILLA PEDAL ARRANQUE / KICKSTART PEDAL BASE BALL	ME250036062	1
19	MUELLE MUÑEQUILLA PEDAL ARRANQUE / KICKSTART PEDAL BASE SPRING	ME250036066	1
20	CTO. PEDAL ARRANQUE ALUMINIO / KICKSTART PEDAL SET	ME890002510	1
21	RETÉN PEDAL ARRANQUE 20X30X7 / KICKSTART PEDAL SEAL 20X30X7	ME25632021	1
22	TORN. PEDAL ARRANQUE / SCREW STARTER PEDAL	ME250036062	1
23	TORICA TORN. PEDAL ARRANQUE / TORIC SCREW STARTER PEDAL	ME250036063	1

125cc.

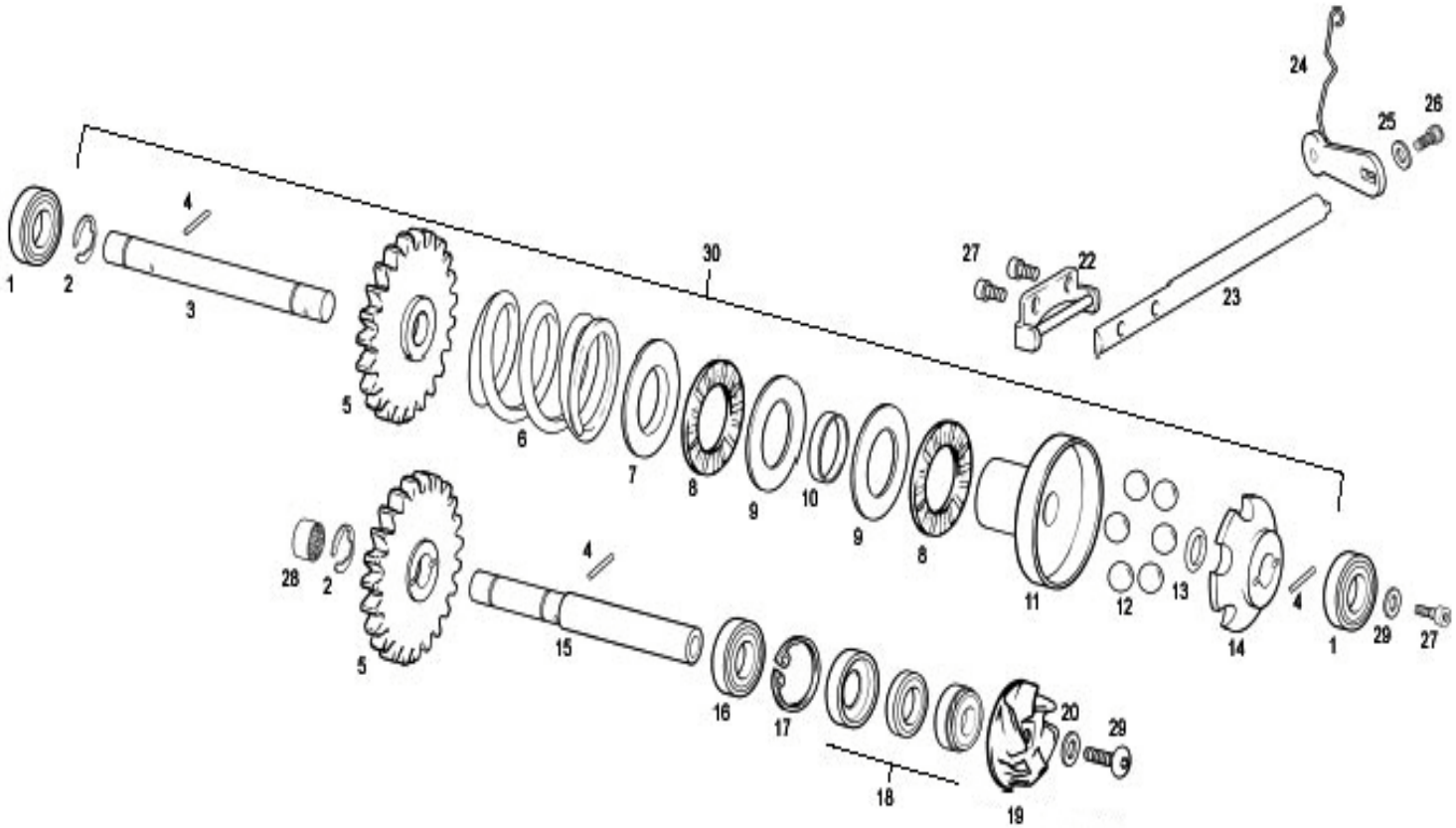
1
2
3
4
5
6
7
8
9
10
9
8
11
12
13
14
4
1
29
27
24
25
26
27
22
23
30
28
2
5
4
15
16
17
18
19
20
29

Nº	DESCRIPCION / DESCRIPTION	125	Cant.
1	RODAJE CENTRÍFUGO Y BOMBA 608.Z.C3 / WATER PUMP AXIS BEARING	ME25616032	2
2	SEEGER DIN 6799 E7 / SEEGER DIN 6799 E7	ME25616024	2
3	EJE CENTRÍFUGO EC125 / IMPELLER AXIS	ME120316005	1
4	RODILLO BOMBA AGUA CENTRÍFUGO / IMPELLER WATER PUMP NEEDLE	MT280238048	3
5	PIÑÓN BOMBA AGUA Y CENTRÍFUGO / WATER PUMP PINION	ME120110005	2
6	MUELLE CENTRÍFUGO VÁLVULA ESCAPE / EXHAUST VALVE SPRING	ME580001211	1
7	ARANDELA CENTRAJE MUELLE / IMPELLER SPRING WASHER	ME25616029	1
8	JAULA AGUJA VÁLVULA ESCAPE / EXHAUST VALVE NEEDLES BEARING	ME25632046	2
9	PLACA AGUJA RODAMIENTO BOLET Y VÁLVULA ESCAPE AS 1528 / PLAIN WASHER	ME25632016	2
10	SEPARADOR COJINETE CENTRÍFUGO / SPACER	ME25616008	1
11	CAMPANA CENTRÍFUGA / IMPELLER CAN	ME25616007	1
12	BOLAS CENTRÍFUGO EMBRAGUE DE 8 mm. / IMPELLER BALLS 8MM	ME25616033	6
13	TÓRICA 6X2 EJE CENTRÍFUGO VÁLVULA ESCAPE / O'RING 6X2	ME25616045	1
14	ESTRELLA CENTRÍFUGO 6 BOLAS / 6-BALL RETAINER	ME25916006	1
15	EJE PIÑÓN BOMBA AGUA / WATER PUMP PINION AXIS	ME25610006	1
16	RODAMIENTO BOMBA AGUA / WATER PUMP BEARING	ME25610010	1
17	SEEGER INT.26 BOMBA AGUA / WATER PUMP SEEGER 26	ME25636065	1
18	RETÉN BOMBA AGUA (ESTOPADA) / WATER PUMP SEAL	ME25610011	1
19	TURBINA BOMBA AGUA / WATER PUMP IMPELLER	ME25610007	1
20	ARANDELA 6X12X1,5 / 6X12X1,5 WASHER	T4006012	1
21	TORNILLO ULS 6X16 / ULS BOLT 6X16	T0506016	1
22	PALANCA SALIDA CENTRÍFUGO EC125 / IMPELLER OUTER LEVER	ME120116009	1
23	EJE PALANCA CENTRÍFUGO EC125 / IMPELLER LEVER AXIS	ME120116011	1
24	PALANCA VARILLA EC125 / STICK LEVER SET	ME120116110	1
25	ARANDELA 5X12X1,5 (DIN 125) / WASHER 5X12X1,5	T4005012	1
26	ALLEN 5X15 / 5X15 ALLEN BOLT	T0305015	1
27	ALLEN 4X8 NEGRO / 4X8 BLACK ALLEN BOLT	T0304008	3
28	RODAMIENTO AGUJAS HK0810 / NEEDLES BEARING	MFS400126021	1
29	ARANDELA 4X12X1 / 4X12X1 WASHER	T4004112	1
30	CENTRÍFUGO COMPLETO EC 125 / EC 125 IMPELLER SET	ME120316005CT	1

200cc. / 250cc. / 300cc.

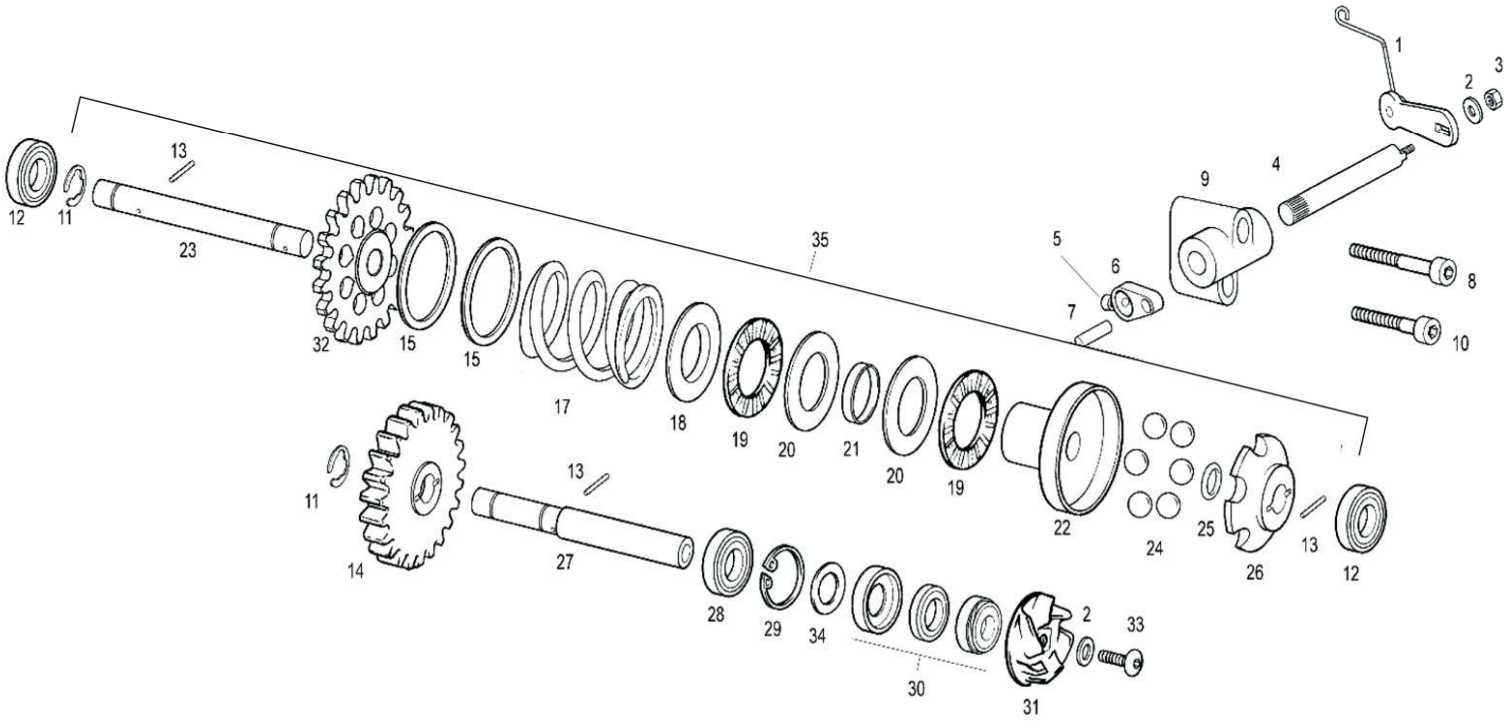

Nº	DESCRIPCION / DESCRIPTION	200/250/300	Cant.
1	CTO. PALANCA VARILLA / STICK LEVER SET	ME25616110	1
2	ARANDELA 5X12X1,5 / WASHER 5X12X1,5	T4005012	2
3	TUERCA AUTOBLOCANTE M5 / SELF-LOCKING NUT M5	T2105000	1
4	EJE PALANCA CENTRÍFUGO / IMPELLER LEVER AXLE	ME25616011	1
5	ALLEN 5X6 / ALLEN BOLT 5X6	T0305006	1
6	PALANCA SALIDA CENTRÍFUGO / IMPELLER OUTER LEVER	ME25616009	1
7	AGUJA 4X15,8 VÁLVULA ESCAPE / EXHAUST VALVE NEEDLE 4X15.8	ME25616037	1
8	ALLEN 6X50 / ALLEN BOLT 6X50	T0306050	1
9	SOPORTE EJE MANDO VÁLVULA / VALVE AXIS SUPPORT	ME25616025	1
10	ALLEN 6X35 / ALLEN BOLT 6X35	T0306035	1
11	SEEGER DIN.6799E7 / SEEGER DIN6799E7	ME25616024	2
12	RODA EJE CENTRÍFUGO Y BOMBA / WATER PUMP AXIS BEARING	ME25616032	2
13	RODILLO 3X14 BOMBA AGUA CENTRÍFUGO / IMPELLER WATER PUMP NEEDLE 3X14	ME25616028	3
14	PIÑÓN BOMBA AGUA / WATER PUMP PINION	ME25610005	1
15	VOL. REGL. M VALV. ESC 31,5X22,5X0,2 / WASHER EXHAUST VALVE 31.5X22.5X0.2	ME25616076	2
17	MUELLE CENTRÍFUGO VÁLVULA ESCAPE 99 / EXHAUST VALVE SPRING 99	ME25916026	1
18	ARANDELA CENTRAJE MUELLE CENTRÍFUGO / IMPELLER SPRING WASHER	ME25616029	1
19	JAULA AGUJA VÁLVULA ESCAPE / EXHAUST VALVE NEEDLES BEARING	ME25632046	2
20	PLACA AGUJA RODAMIENTO BOLET Y VÁLVULA ESCAPE / PLAIN WASHER	ME25632016	2
21	SEPARADOR COJINETE CENTRÍFUGO / SPACER	ME25616008	1
22	CAMPANA CENTRÍFUGO / IMPELLER CAP	ME25616007	1
23	EJE CENTRÍFUGO / IMPELLER AXLE	ME25616005	1
24	BOLA CENTRÍFUGO EMB. DE 8M/M / IMPELLER BALLS 8MM	ME25616033	6
25	TÓRICA 6X2 EJE CENTRAJE VÁLVULA ESCAPE / O'RING 6X2	ME25616045	1
26	ESTRELLA CENTRÍFUGO 6 BOLAS / 6-BALL RETAINER	ME25916006	1
27	EJE PIÑÓN BOMBA AGUA / WATER PUMP PINION AXIS	ME25610006	1
28	RODAMIENTO BOMBA AGUA / WATER PUMP BEARING	ME25610010	1
29	SEEGER INT. 26 BOMBA AGUA / WATER PUMP SEEGER 26	ME25636065	1
30	RETÉN BOMBA AGUA / WATER PUMP SEAL	ME25610011	1
31	TURBINA BOMBA AGUA / WATER PUMP IMPELLER	ME25610007	1
32	PIÑÓN CENTRÍFUGO / IMPELLER PINION	ME580012511	1
33	ULS 6X16 PL. PRIM, GUAR, FIL. / ULS BOLT 6X16	T0506016	1
34	ARANDELA 25,8X17,5X05 BOMBA AGUA / WASHER 25,8X17,5X05 WATER PUMP	M03625000	1
35	CENTRÍFUGO COMPLETO / IMPELLER SET	ME250416005CT	1

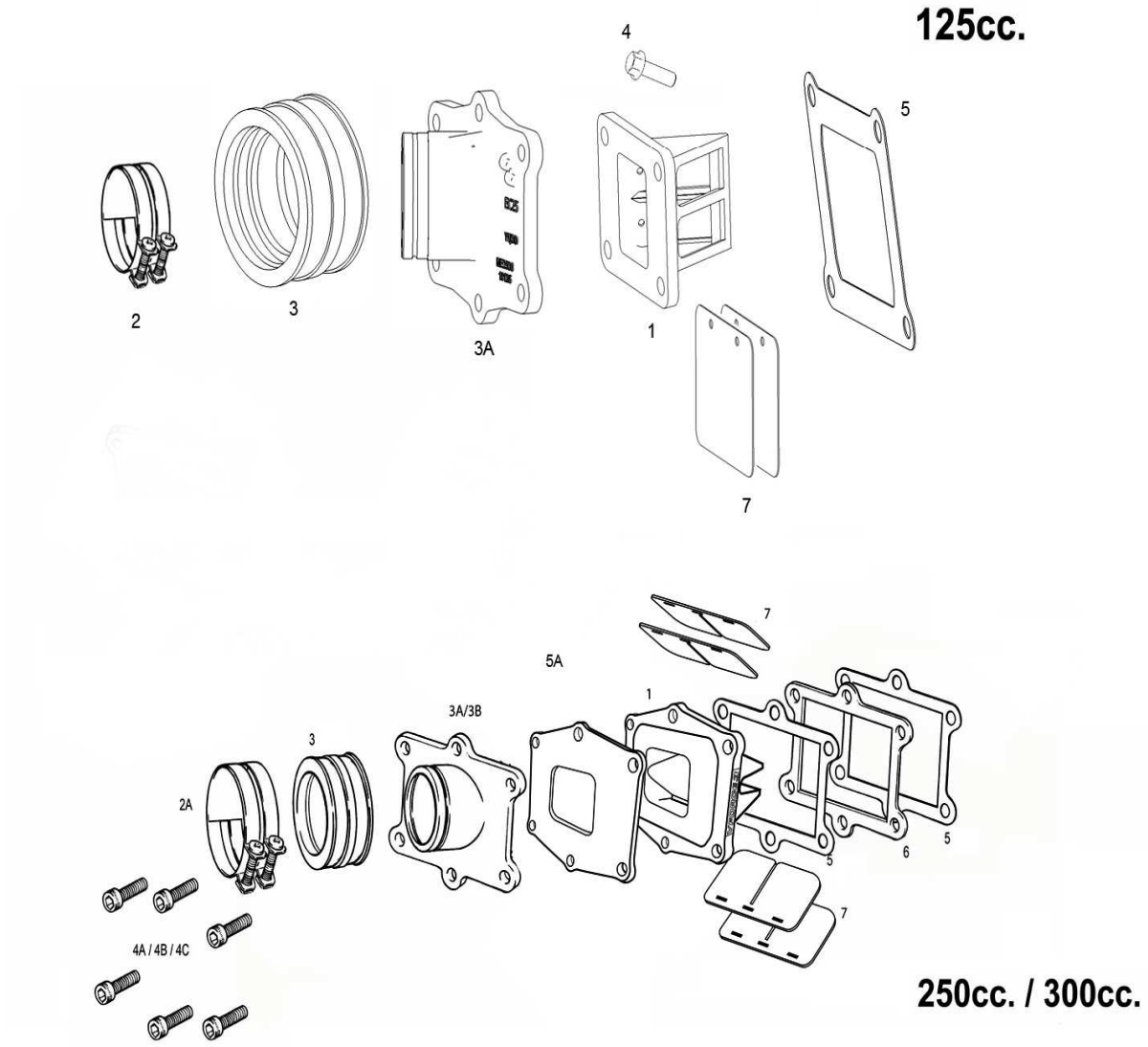
125cc.
4
5
2
3
3A
1
7
7
5A
1
3A/3B
3
2A
5
6
5
7
4A / 4B / 4C
250cc. / 300cc.

Nº	DESCRIPCION / DESCRIPTION	125	200	250	300	Cant.
1	CTO. CAJA DE LAMINAS / REED VALVE ASSEMBLY	ME120616021	ME200716021CT	ME200616021		1
2	ABRAZADERA CAJA LÁMINAS / REED VALVE CLAMP	ME120616132		-		1
2A	ABRAZADERA CAJA LÁMINAS / REED VALVE CLAMP	-		MT280316132		2
3	GOMA CAJA DE LÁMINAS / REED VALVE RUBBER	ME120116131		ME250616131		1
3A	TUBERA CAJA LÁMINAS / REED VALVE RUBBER	ME120616135		ME250616135	ME250616135	1
3B	TUBERA EURO 3 / EURO 3 REED VALVE RUBBER			ME250816135	ME250816135	1
4	TORNILLO ESPECIAL 6X20 / SPECIAL BOLT 6X20	T0206020		-		4
4A	ALLEN 6X16 TAPA EMBRAGUE CÁRTER / 6X16 ALLEN BOLT	-	T0306016	T0306016		6
4B	TORNILLO ESPECIAL 6X25 / SPECIAL BOLT 6X25				T0206025	6
4C	TORNILLO ESPECIAL 6X30 / SPECIAL BOLT 6X30				T0206030	6
5	JUNTA CAJA LÁMINAS CÁRTER / CRANKCASE REED VALVE GASKET	ME120644005	ME946002010	ME250644005	ME250644005	1
5A	JUNTA CAJA LÁMINAS TUBERA / RUBBER REED VALVE GASKET			ME250644105	ME250644105	1
6	PLATINA DISTANCIADOR LÁMINAS / REED SPACER BRACKET			-	ME300616057	1
7	JUEGO LÁMINAS ADMISIÓN / REED VALVE SET	ME120616041	ME120116041	ME250616041	ME250616041	2

125cc.

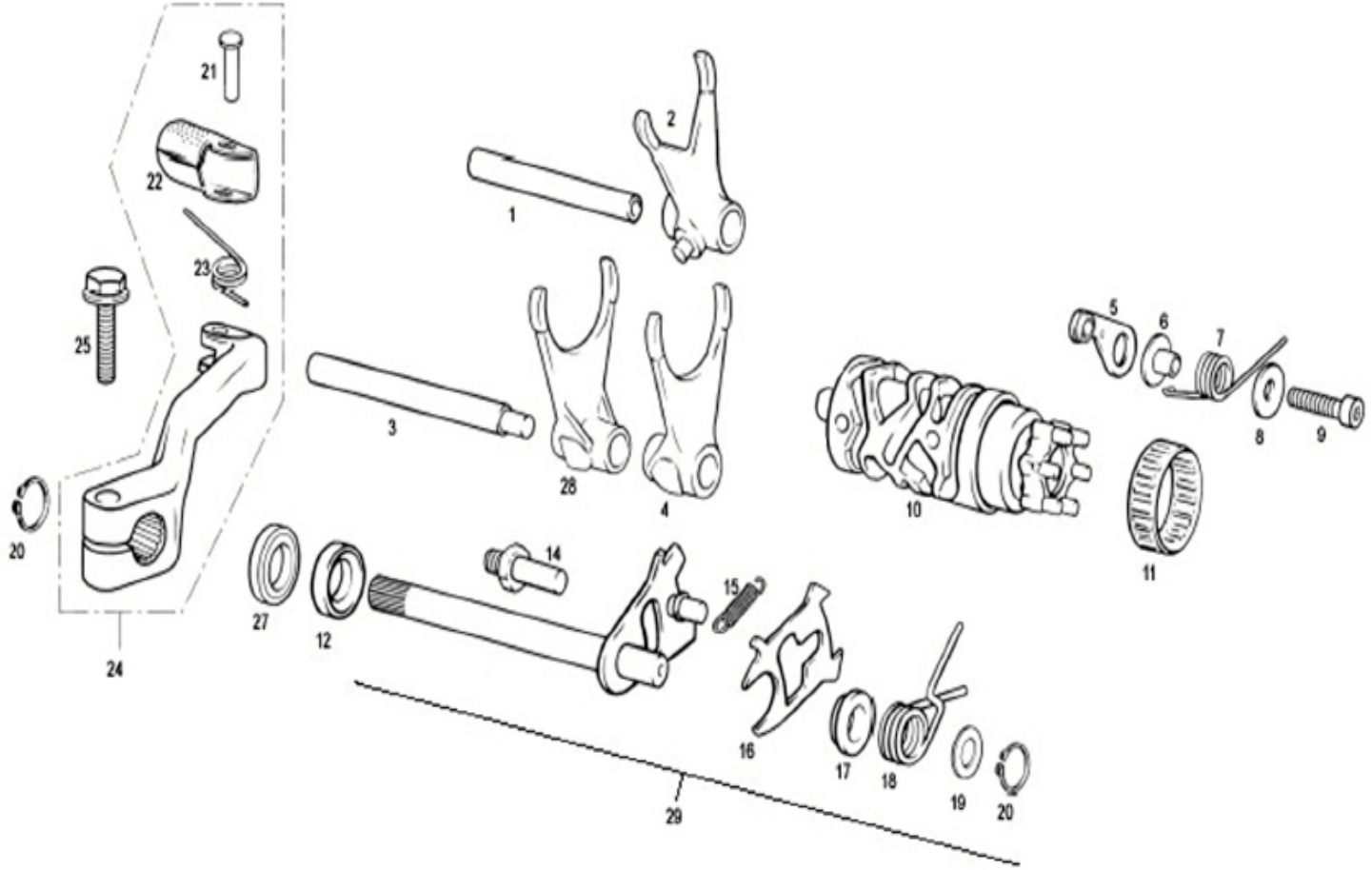

Nº	DESCRIPCION / DESCRIPTION	125	Cant.
1	EJE HORQUILLA CORTO EC125 / SHORT FORK AXIS	ME120136045	1
2	HORQUILLA PRIM. 5-6 / SHIFT FORK 5-6	ME120136009	1
3	EJE HORQUILLA LARGO / LONG FORK AXIS	ME120136044	1
4	HORQUILLA SECUNDARIO 1-4 / EC125 / SHIFT FORK 1-4	ME120136008	1
5	FIJADOR MARCHAS EC / GEAR LEVER END	ME250036033CT	1
6	CASQUILLO PLATINA FIJADOR MARCHAS / GEAR BUSHING	ME25636047	1
7	MUELLE FIJADOR MARCHAS EC125 / GEAR FASTEN SPRING	ME120136034	1
8	ARANDELA PLANA 6.5X16X1.5 / PLANE WASHER 6.5X16X1.5	T4006016	1
9	ALLEN 6X25 / ALLEN BOLT 6X25	T0306025	1
10	DESMODRÓMICO EC125 / SHIFT CAM	ME120536031	1
11	RODAMIENTO DESMODRÓMICO HK3512 / HK3512 SHIFT CAM BEARING	ME25636054	1
12	CASQUILLO EJE SELECTOR / AXIS BUSHING	ME250136050	1
14	TORNILLO CENTRADOR MUELLE SELECTOR / SELECTOR SPRING SCREW	ME25636042	1
15	MUELLE ESCORPIÓN / SCORPION SPRING	ME25636039	1
16	ESCORPIÓN / SCORPION	ME250236036	1
17	DOLLA CENTRADOR ESCORPIÓN / SCORPION CENTRER	ME250236041	1
18	MUELLE SELECTOR / SELECTOR SPRING	ME25636035	1
19	ARANDELA 12,10/12,25X22X3 / 12,10/12,25X22X3 WASHER	T4012022	1
20	SEEGER 12X1 / 12X1 SEEGER	ME25636043	2
21	PASADOR PUNTERA PEDAL 6X18 / 6X18 LEVER END PIN	ME25636030	1
22	PUNTERA PEDAL CAMBIO / GEAR LEVER END	ME25636027	1
23	MUELLE PUNTERA PEDAL ARRANQUE / GEAR LEVER END SPRING	ME25636029	1
24	CTO. PEDAL CAMBIO / GEAR LEVEL SET	ME120336026	1
25	HEXAGONAL 6X20 CON ARANDELA / 6X20 HEXAGONAL WITH WASHER	T0206020	1
27	RETÉN SELECTOR / SELECTOR SEAL	ME120136048	1
28	HORQUILLA SECUNDARIO 2-3 / SHIFT FORK 2-3	ME120136108	1
29	EJE SELECTOR EC125 COMPLETO / SELECTOR AXIS COMPLETE	ME120236038CT	1

200cc. / 250cc. / 300cc.

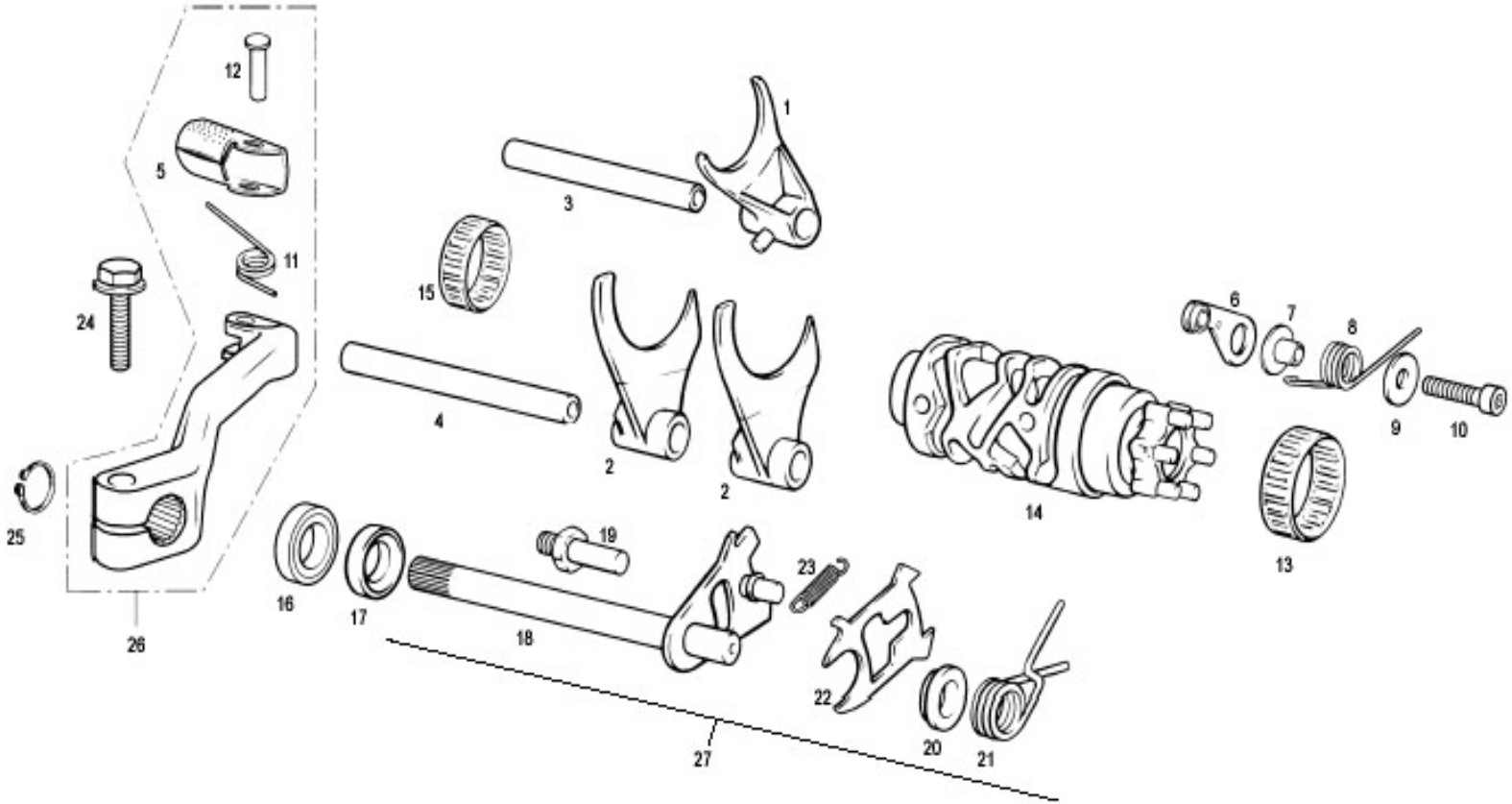

Nº	DESCRIPCION / DESCRIPTION		250	Cant.
1	HORQUILLA 5-6 / SHIFT FORK 5-6		ME25636009	1
2	HORQUILLA 1-2-3-4 / SHIFT FORK 1-2-3-4		ME25636008	2
3	EJE HORQUILLA CORTO / SHORT FORK AXIS		ME25636045	1
4	EJE HORQUILLA LARGO / LONG FORK AXIS		ME25636044	1
5	PUNTERA PEDAL CAMBIO / GEAR LEVER END		ME25636027	1
6	FIJADOR MARCHAS / GEAR FASTEN		ME250036033	1
7	CASQUILLO. PLATINA FIJADOR MARCHAS / GEAR BUSHING		ME25636047	1
8	MUELLE FIJADOR MARCHAS / GEAR FASTEN SPRING		ME250036034	1
9	ARANDELA PLANA 6X16X1,5 / PLANE WASHER 6X16X1.5		T4006016	1
10	ALLEN 6X25X8.8 / ALLEN BOLT 6X25X8.8		T0306025	1
11	MUELLE PUNT. PEDAL CAMB. / GEAR LEVER END SPRING		ME25636029	1
12	PASADOR PUNT. PEDAL 6X18 / LEVER END PIN 6X18		ME25636030	1
13	RODAMIENTO DESMODRÓMICO HK3512 / SHIFT CAM BEARING		ME25636054	1
14	DESMODRÓMICO / SHIFT CAM		ME250536031	1
15	RODAMIENTO DESMODRÓMICO HK2512 / SHIFT CAM BEARING		ME25636055	1
16	RETÉN SELECTOR 12-22-7 / SEAL 12-22-7		ME25636048	1
17	CASQ. EJE SELECTOR / AXIS BUSHING		ME250136050	1
18	EJE SELECTOR / SELECTOR AXIS		ME250236038	1
19	TORN. CENTR. MUELLE SELECT. / SELECTOR SPRING SCREW		ME25636042	1
20	DOLLA CENTRADOR ESCORPIÓN / SCORPION CENTRER		ME250236041	1
21	MUELLE SELECTOR / SELECTOR SPRING		ME25636035	1
22	ESCORPIÓN / SCORPION		ME250236036	1
23	MUELLE ESCORPIÓN / SCORPION SPRING		ME25636039	1
24	HEXAGONAL 6X20 CON ARANDELA / 6X20 HEXAGONAL WITH WASHER		T0206020	1
25	SEEGER 12X1 EXT. EJE SELECTOR / SEEGER 12X1		ME25636043	1
26	CTO. PEDAL CAMBIO / GEAR LEVER SET		*ME120336026	1
26A	PEDAL CAMBIO CORTO / SHORT GEAR LEVER SET		ME250036026	1
27	EJE SELECTOR COMPLETO EC250 / EC250 SELECTOR AXIS COMPLETE		ME250236038CT	1

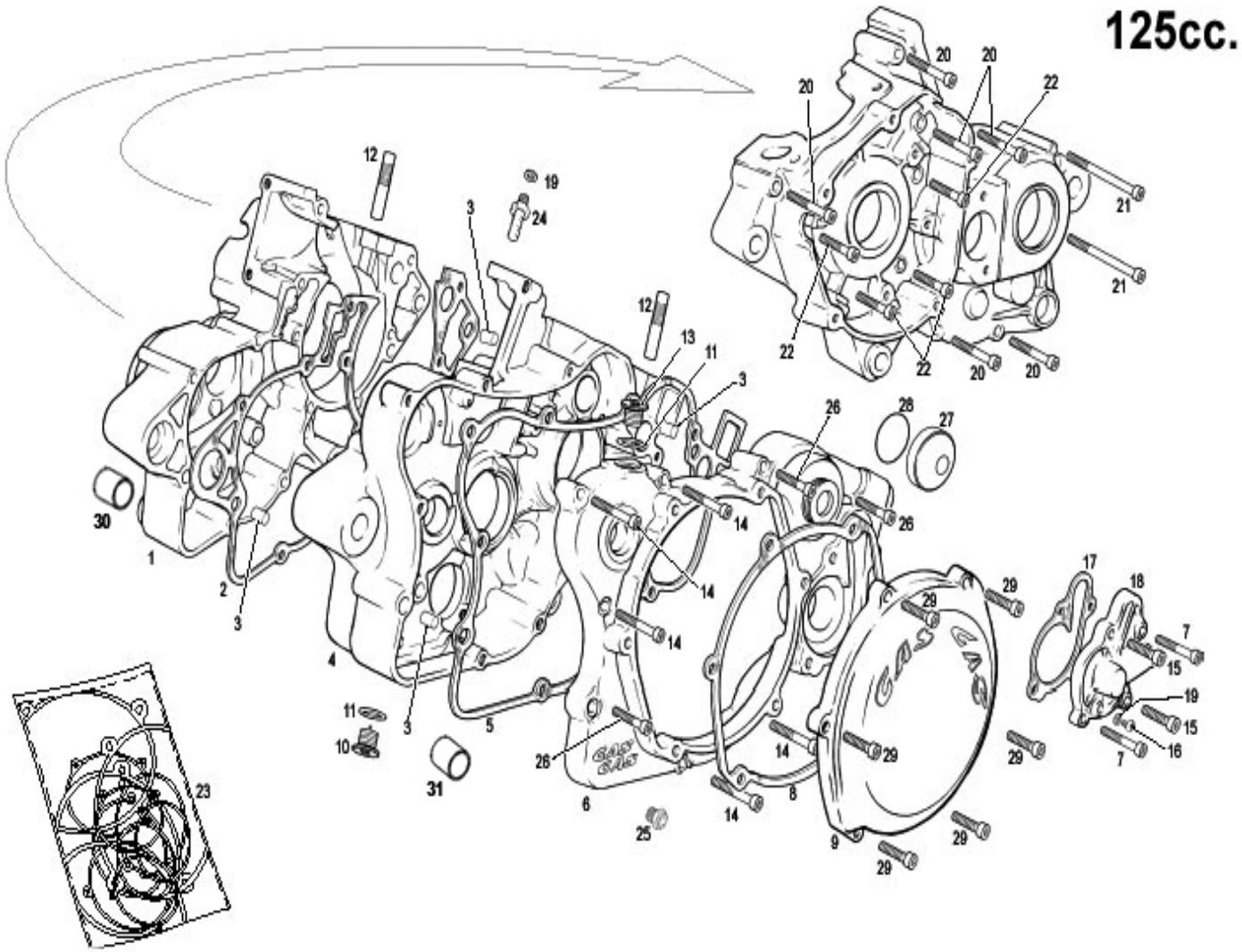
125cc.

Nº	DESCRIPCION / DESCRIPTION	125	Cant.
1	CÁRTER IZQUIERDO EC125 / LEFT CRANKCASE	ME110001211	1
2	JUNTA CÁRTER CENTRAL EC125 / CENTRAL CRANKCASE GASKET	ME120144001	1
3	CASQUILLO CENTRADOR CÁRTER / CRANKCASE HUSHING	ME25610018	4
4	CÁRTER DERECHO EC125 / RIGHT CRANKCASE	ME100001211	1
5	JUNTA TAPA EMBRAGUE 0.5MM / CLUTCH COVER GASKET	ME120144002	1
6	TAPA EMBRAGUE EC125 / CLUTCH COVER	ME120332001	1
7	TORNILLO ESPECIAL 6X60 / SPECIAL BOLT 6X60	T0206060	2
8	JUNTA TAPA DISCOS 0.8 / DISCS COVER GASKET 0.8	ME120144003	1
9	TAPA DISCOS EMBRAGUE MAGNESIO / MAGNESIUM DISCS CLUTCH COVER	ME120132002	1
10	TAPÓN VACIADO ACEITE CON IMÁN / MAGNETIC OIL DRAIN PLUG	M01016002	1
11	ARANDELA COBRE 12X18X1,5 / 12X18X1,5 WASHER	MT280410030	2
12	ESPÁRRAGO CILINDRO EC125 M8 / CYLINDER PIN	ME120116023	2
13	TAPÓN LLENADO ACEITE / OIL FILL PLUG	ME25610016	1
14	TORNILLO ESPECIAL 6X35 / SPECIAL BOLT 6X35	T0206035	5
15	TORNILLO ESPECIAL TAPA EMBRAGUE CART. SUP. 6X25 / SPECIAL BOLT 6X25	T0206025	2
16	ULS 6X10 / ULS BOLT 6X10	T0506010	1
17	JUNTA TAPA BOMBA AGUA EC125 / WATER PUMP COVER GASKET	ME120144008	1
18	TAPA BOMBA AGUA EC125 / WATER PUMP COVER	ME120110008	1
19	ARANDELA FIBRA 6X10X1.5 / FIBER WASHER 6X10X1.5	T4006010	2
20	TORNILLO ESPECIAL 6X55 / SPECIAL BOLT 6X55	T0206055	6
21	TORNILLO ESPECIAL 6X70 8.8 CÁRTER / SPECIAL BOLT 6X70	T0206070	2
22	TORNILLO ESPECIAL 6X45 / SPECIAL BOLT 6X45	T0206045	4
23	KIT JUNTAS EC 125 / EC125 GASKET KIT	ME120144100	1
24	DESVAPORIZADOR CÁRTER / CARTER BREATHE	M01032001	1
25	VISOR NIVEL DE ACEITE / OIL LEVEL PLUG	ME25610015	1
26	TORNILLO ESPECIAL 6X40 / SPECIAL BOLT 6X40	T0206040	3
27	TAPÓN CENTRÍFUGO / IMPELLER CAP	ME120332085	1
28	TÓRICA 28X1,78 / 28X1,78 O'RING GASKET	ME120332086	1
29	TORNILLO ESPECIAL 6X20 / SPECIAL BOLT 6X20	T0206020	6
30	GLACIER 1212	BE25610009	1
31	GLACIER 1512	C200101	1

200cc. / 250cc. / 300cc.

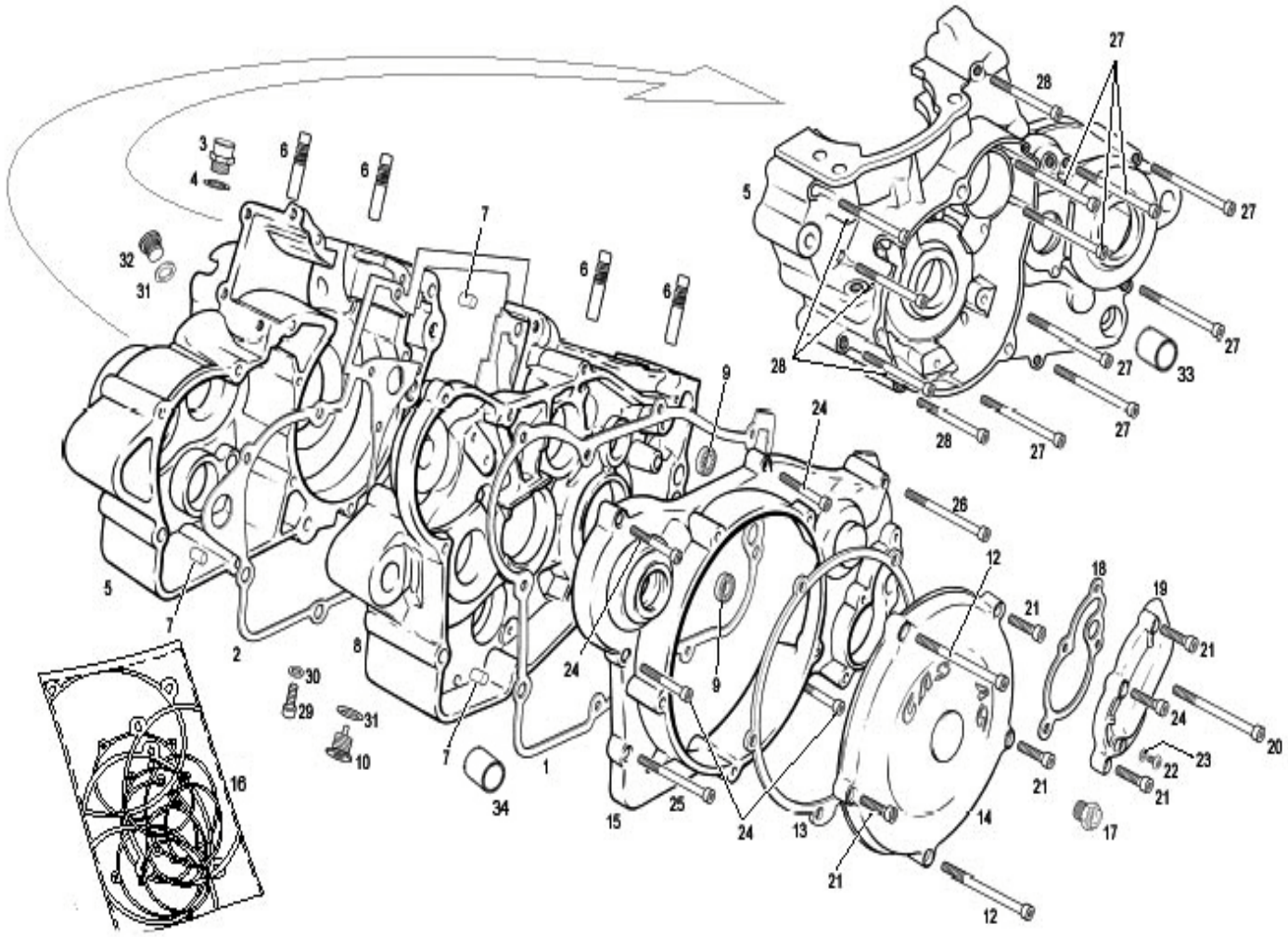

Nº	DESCRIPCION / DESCRIPTION	200	250/300	Cant.
1	JUNTA TAPA EMBRAGUE / CLUTCH COVER GASKET		ME25644002	1
2	JUNTA CARTER CENTRAL / CENTRAL CRANKCASE GASKET		ME250544001	1
3	RACORD ENTRADA AGUA / WATER INLET VALVE		ME25610013	1
4	ARANDELA FIBRA 14X20X2 RACORD ENTR. AGUA / FIBER WASHER		ME25610014	1
5	CÁRTER IZQUIERDO / LEFT CRANKCASE	ME200510001	ME250510001	1
6	ESPÁRRAGO CILINDRO / CYLINDER PIN		ME25616023	4
7	CASQUILLO CENTRADOR CARTER / CRANKCASE BUSHING		ME25610018	6
8	CÁRTER DERECHO / RIGHT CRANKCASE	ME200510000	ME250510000	1
9	RODAMIENTO EJE CENTRÍFUGO Y BOMBA / WATER PUMP BEARINGS		ME25616032	2
10	TAPÓN VACIADO ACEITE CON IMÁN / MAGNETIC OIL DRAIN PLUG		ME25610017	1
12	TORNILLO ESPECIAL 6X75 / SPECIAL BOLT 6X75		T0206075	2
13	JUNTA TAPA DISCOS DIAM. 8 / DISCS COVER GASKET 8MM		ME25644003	1
14	TAPA DISCOS EMBRAGUE / DISCS CLUTCH COVER		ME260732002	1
15	TAPA EMBRAGUE / CLUTCH COVER		ME650002510	1
16	KIT JUNTAS / GASKET KIT		ME250544100	1
17	VISOR NIVEL ACEITE / OIL LEVEL PLUG		ME25610015	1
18	JUNTA TAPA BOMBA AGUA / WATER PUMP COVER GASKET		ME25944008	1
19	TAPA BOMBA AGUA / WATER PUMP COVER		ME570002510	1
20	TORNILLO ESPECIAL 6X80 CARTER / SPECIAL BOLT 6X80		T0206080	1
21	TORNILLO 6X25 TAPA EMBRAGUE / SPECIAL BOLT 6X25		T0206025	6
22	ULS 6X10 / ULS BOLT 6X10		T0506010	1
23	ARANDELA FIBRA 6X10X1,5 / FIBER WASHER 6X10X1.5		T4006010	1
24	TORNILLO ESPECIAL 6X30 / SPECIAL BOLT 6X30		T0206030	4
25	TORNILLO ESPECIAL 6X35 / SPECIAL BOLT 6X35		T0206035	1
26	TORNILLO ESPECIAL 6X55 / SPECIAL BOLT 6X55		T0206055	1
27	ALLEN 6X70 / ALLEN BOLT 6X70		T0306070	8
28	ALLEN 6X60 / ALLEN BOLT 6X60		T0306060	5
29	ALLEN 8X14 / ALLEN BOLT 8X14		T0308014	1
30	ARANDELA COBRE 8X12X1 / COPPER WASHER 8X12X1		T4008012	1
31	TÓRICA12X2 TAPÓN ACEITE / OIL CAP O'RING 2X2		MT280410030	2
32	TAPÓN LLENADO ACEITE / OIL FILL PLUG		M01016002	1
33	GLACIER 1512		C200101	1
34	GLACIER 1212		BE25610009	1

125cc.

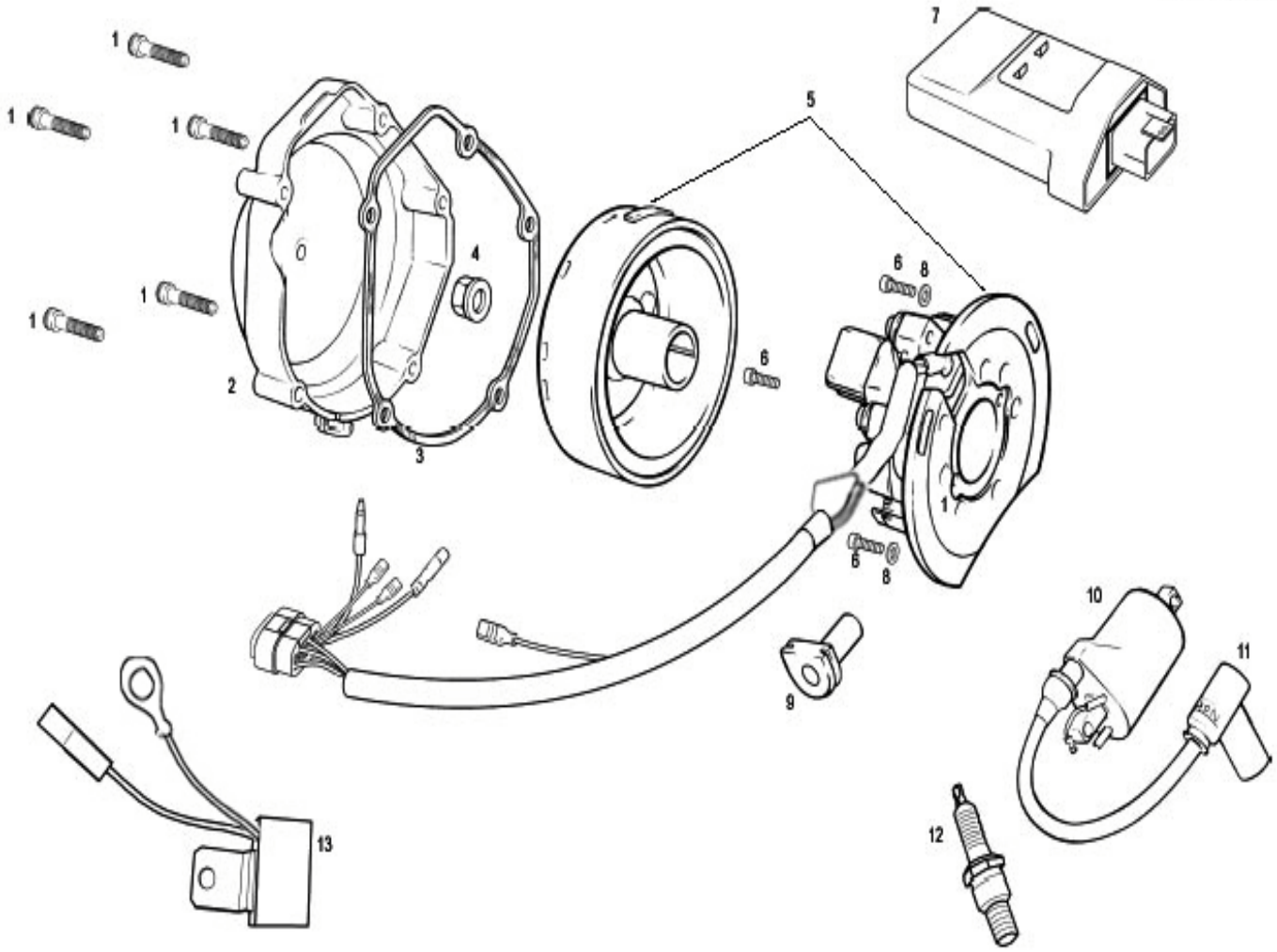

Nº	DESCRIPCION / DESCRIPTION	125	Cant.
1	TORNILLO ESPECIAL 6X40 / SPECIAL BOLT 6X40	T0206040	5
2	TAPA ENCENDIDO PLÁSTICO EC125-2001 / PLASTIC IGNITION COVER	ME120110004	1
3	JUNTA TAPA VOLANTE EC125-2001 / IGNITION COVER GASKET	ME120144004	1
4	TUERCA CON ARANDELA / NUT WITH WASHER	MFS400134011	1
5	VOLANTE MAGNÉTICO KOKUSAN MULTISPARK FP-8009 / IGNITION COMP.	MC250534005	1
6	ALLEN 6X16 / ALLEN BOLT 6X16	T0306016	2
7	CDI / CDI	ME120534007	1
8	ARANDELA PLANA 6X12X1.5 (DIN 125) / PLAIN WASHER 6X12X1.5	T4006012	2
9	TAPÓN GOMA ENCENDIDO / IGNITION RUBBER CAP	ME25934014	1
10	BOBINA / IGNITION COIL	ME250434006	1
11	PIPA BUJÍA / SPARK PLUG CAP	ME25934000	1
12	BUJÍA BPR9 / SPARK PLUG	ME120134000	1
13	REGULADOR ALTERNADOR / ALTERNATOR REGULATOR	L300031	1

200cc. / 250cc. / 300cc.

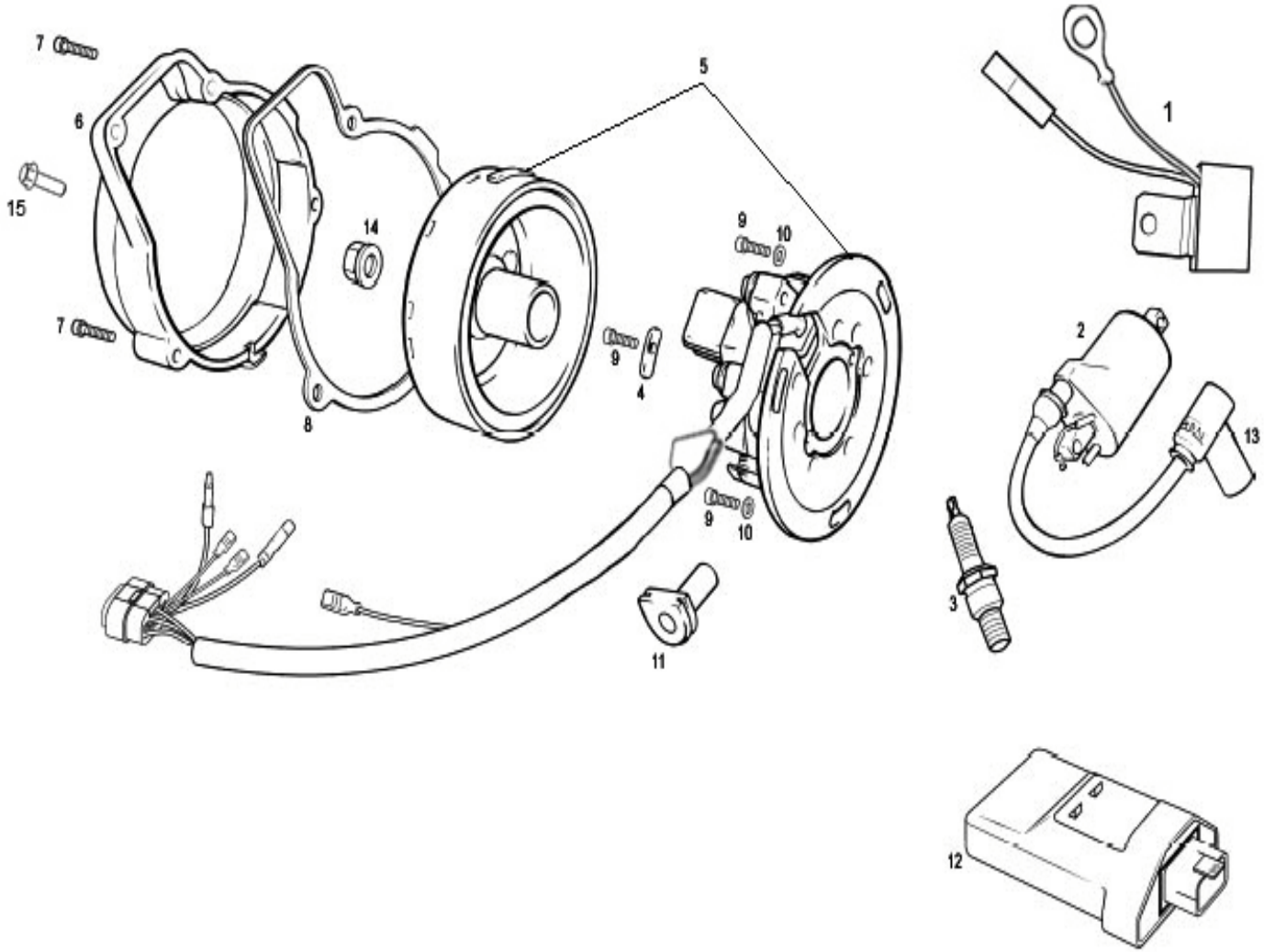

Nº	DESCRIPCION / DESCRIPTION	200/250/300	Cant.
1	REGULADOR ALTERNADOR / ALTERNATOR REGULATOR	L300031	1
2	BOBINA / IGNITION COIL	ME250434006	1
3	BUJÍA / SPARK PLUG	ME25934000	1
4	CENTRAJE ENCENDIDO / IGNITION CENTRER	ME25934025	1
5	VOLANTE MAG. KOKUSAN FP-8009 MULTISPARK / FP-8009 IGNITION COMP.	ME250534005	1
6	TAPA ENCENDIDO PLÁSTICO / PLASTIC IGNITION COVER	ME250510004	1
7	TORNILLO ESPECIAL 6X40	T0206040	3
8	JUNTA TAPA VOLANTE / IGNITION COVER GASKET	ME250544004	1
9	ALLEN 5X20 / ALLEN BOLT 5X20	T0305020	3
10	ARANDELA PLANA 5X12X1,5 / PLAIN WASHER 5X12X1.5	T4005012	2
11	TAPÓN GOMA ENCENDIDO / IGNITION RUBBER CAP	ME25934014	1
12	CDI / CDI	ME250634007	1
13	PIPA BUJÍA / SPARK PLUG CAP	BE25934000	1
14	TUERCA CON ARANDELA / NUT WITH WASHER	MC25934011	1
15	TORNILLO ESPECIAL 6X25	TO206025	1

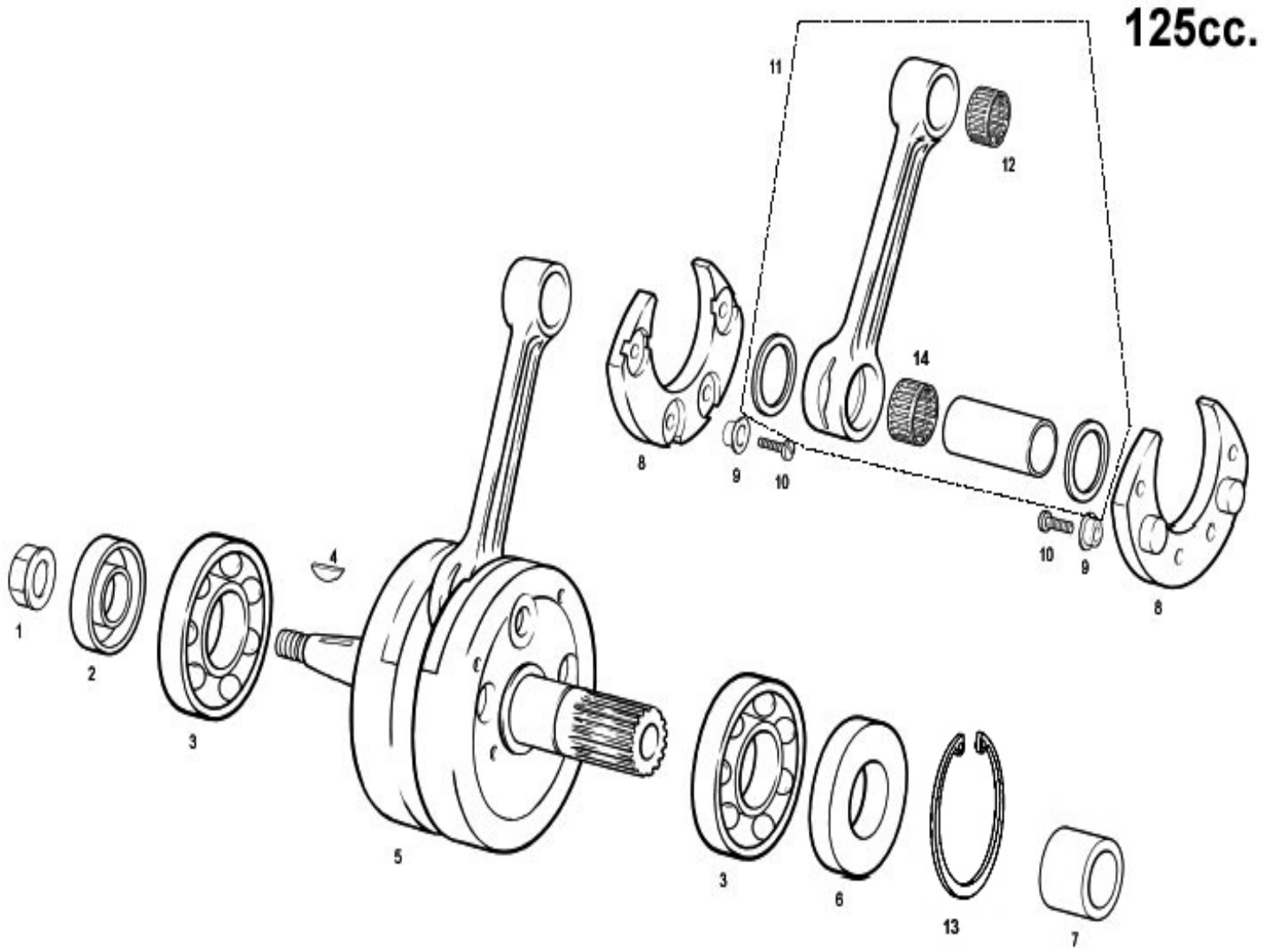
125cc.
1
2
3
4
5
3
6
13
7
8
9
10
11
12
14
10
9
8

Nº	DESCRIPCION / DESCRIPTION	125	Cant.
1	TUERCA VOLANTE CON ARANDELA / IGNITION NUT	MFS400134011	1
2	RETÉN LADO IZQ. CIG. TCJ 20X35X6/6,5 / LEFT SIDE CRANK SHAFT SEAL	ME250112009	1
3	RODAMIENTO CIGÜEÑAL 125CC 63/22C / CRANKSHAFT BEARING	ME120112006R	2
4	CHAVETA VOLANTE = MO1224001 / IGNITION KEY	ME25634016	1
5	CTO. CIGÜEÑAL EC 125-2001 / CRANKSHAFT ASSEMBLY	ME30000CT1209	1
6	RETÉN LADO DERECHO CIG. / RIGHT SIDE CRANK SHAFT SEAL	ME120112008	1
7	CASQUILLLO CIGÜEÑAL TRANS. PRIMARIO / CRANKSHAFT BUSHING	ME120112014	1
8	NYLON CONTRAPESO / COUNTERWEIGHT NYLON	ME120112021	2
9	CASQUILLO NYLON CONTRAPESO / COUNTER WEIGHT NYLON BUSHING	ME120112011	8
10	TORNILLO ULS 6x16 / 6X16 ULS BOLT	T0506016N	2
11	CTO. BIELA / ROD. SET	ME320001209	1
12	RODAMIENTO PIE BIELA / ROD BEARING	ME320501209	1
13	CIRCLIP Ø 45	ME102001210	1
14	JAULA BIELA 18 AGUJAS 28X22X16	ME320551209	1

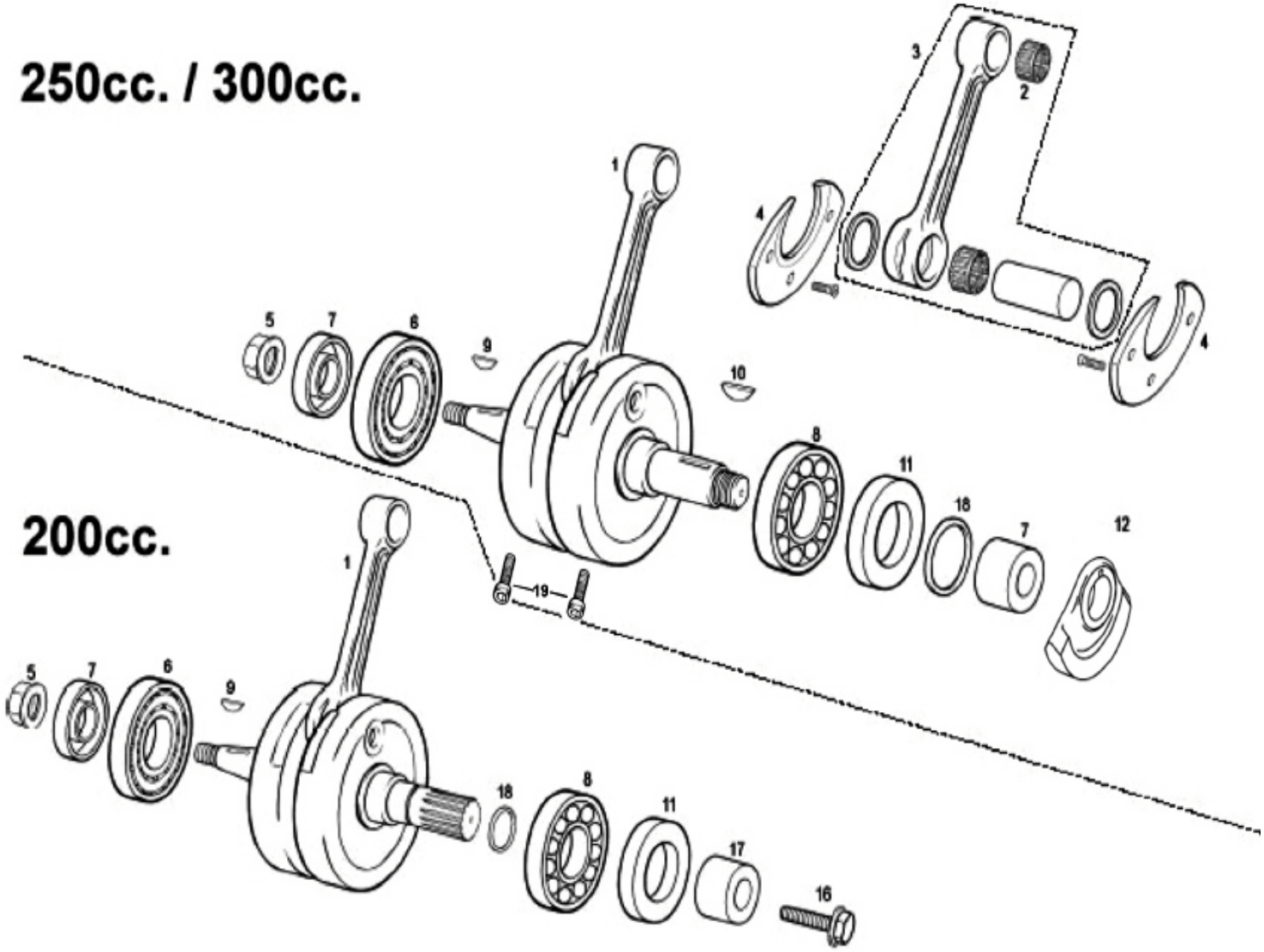
250cc. / 300cc.
200cc.
1
2
3
4
5
6
7
8
9
10
11
12
16
17
18
19

Nº	DESCRIPCION / DESCRIPTION	200	250/300	Cant.
1	CTO. CIGÜEÑAL / CRANKSHAFT ASSEMBLY	ME200512000	ME30000CT3010	1
2	RODAMIENTO 18X22X22 PIE BIELA / ROD BEARING	-	ME25616035	1
3	CTO. BIELA / ROD SET	ME25612100	ME25612100	1
4	NYLON CONTRAPESO / COUNTERWEIGHT NYLON	ME20812021	ME250212021	2
5	TUERCA CON ARANDELA / NUT WITH WASHER		MC25934011	1
6	RODAMIENTO 6206 CIGÜEÑAL / 6206 CRANKSHAFT BEARING		ME310002508	1
7	RETÉN LADO IZQUIERDO CIGUEÑAL / LEFT SIDE CRANK SHAFT SEAL		ME250112009	1
8	RODAMIENTO 63/28 CIGÜEÑAL (DER.) / 63/28 CRANKSHAFT BEARING (RIGHT SIDE)		ME310012508	1
9	CHAVETA VOLANTE / IGNITION KEY		ME25634016	1
10	CHAVETA CIGÜEÑAL / CRANKSHAFT KEY		ME25612010	1
11	RETÉN LADO DERECHO CIGÜEÑAL / RIGHT SIDE CRANK SHAFT SEAL		ME250112008	1
12	INERCIA VOLANTE / IGNITION INERTIA		ME250712017	1
16	HEXAGONAL CON ARANDELA / HEXAGONAL BOLT WITH WASHER	T02012025	-	1
17	CASQUILLO CIGÜEÑAL / CRANK SHAFT BUSHING	ME200512014	ME250112014	1
18	TÓRICA CIGÜEÑAL / CRANK SHAFT O'RING	ST950207	ME250112011	1

			300	
19	TORN. ALLEN 8X10 / ALLEN SCREW 8X10		T0308010	2

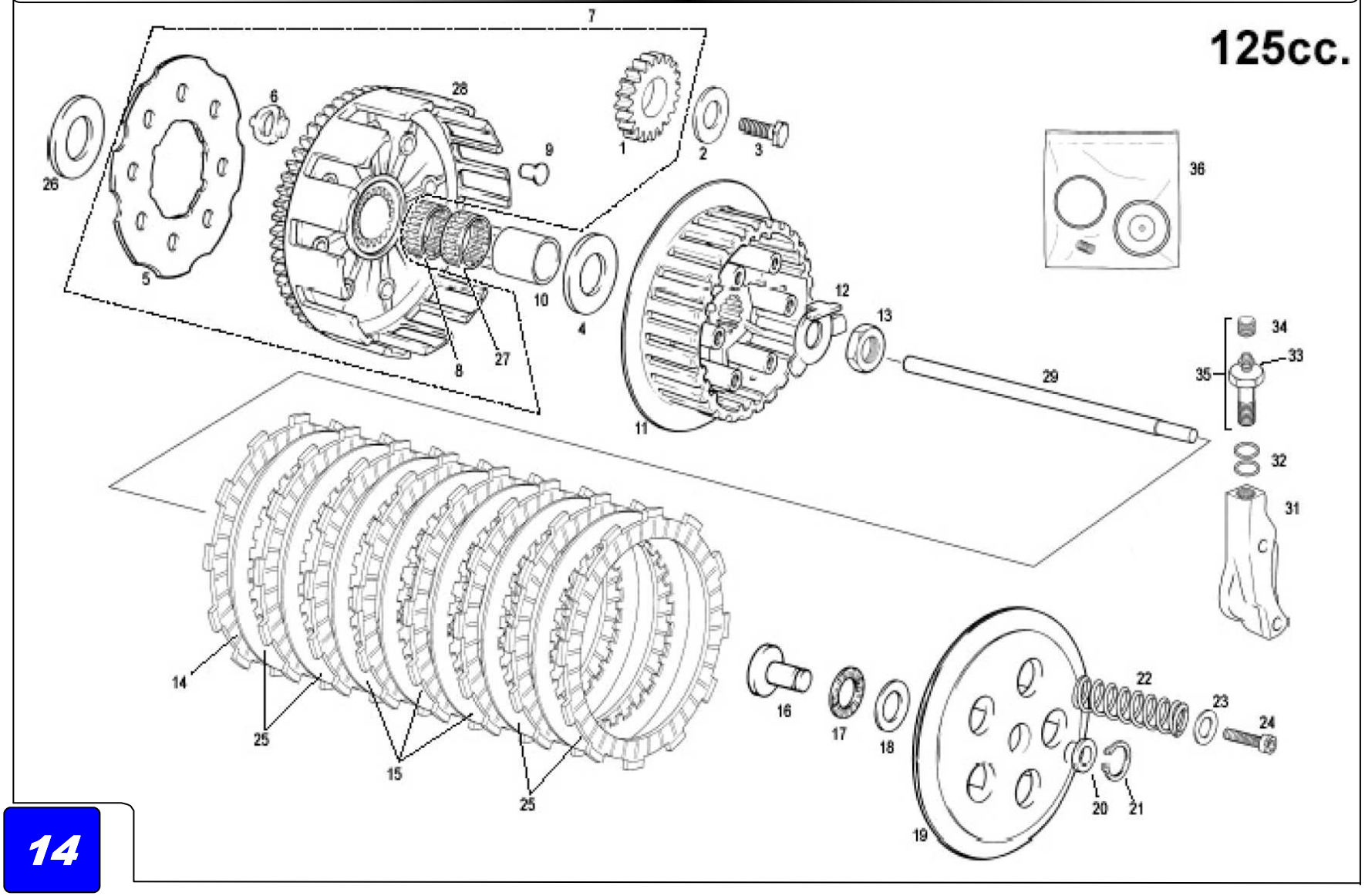
125cc.
7
26
6
28
9
1
2
3
36
5
10
4
12
13
34
33
35
8
27
29
11
32
31
14
25
15
25
16
17
18
22
23
24
20
21
19

Nº	DESCRIPCION / DESCRIPTION	125	Cant.
1	PIÑÓN CIGÜEÑAL TRANS.PRIM. / PR. TRANSMISION CRANK SHAFT PINION	ME120112004	1
2	ARANDELA 10X28X4 / 10X28X4 WASHER	T4001028	1
3	TORNILLO M10X25/150 12.9 / M10X25/150 12.9 BOLT	T0101025/2	1
4	ARANDELA CAMBIO / SHIFT WASHER	ME120136101	1
5	ARANDELA CORONA EMBRAGUE / CLUTCH BOSS WASHER	ME120132009	1
6	GOMA SILENTBLOCK / SILENTBLOCK RUBBER	ME120132008	8
7	CTO. CORONA CAMPANA EMBRAGUE / PRIMARY DRIVEN GEAR SET	ME120132000	1
8	COJINETE CAMPANA EMBRAGUE / PRIMARY DRIVEN GEAR BEARING	ME120132031	1
9	REMACHE CAMPANA 22103-KS6-300 / PRIMARY DRIVEN GEAR RIVETS	ME120132010	8
10	CASQUILLO CAMPANA EMBRAGUE / PRIMARY DRIVEN GEAR BUSHING	ME120132012	1
11	CUBO EMBRAGUE 22120-KZ4-A90 EC2001 / CLUTCH BOSS	ME120132005	1
12	PRECINTO EMBRAGUE / CLUTCH LOCK	ME120132022	1
13	TUERCA FIJACIÓN CUBO EMBRAGE / CLUTCH BISS NUT	ME120132028	1
14	DISCO EMBRAGUE FORRADO 22201-KS6-700 / COVERED CLUTCH DISK	ME120132007	8
15	DISCO EMBRAGUE HIERRO 272M9 / IRON CLUTCH DISK	ME120132037	3
16	EMPUJADOR EMBRAGUE / CLUTCH PIN	ME120132014	1
17	RODAMIENTO AXIAL EMPUJADOR EMBRAGUE / AXIAL BEARING CLUTCH PIN	ME120132042	1
18	ARANDELA EMPUJADOR EMBRAGUE / CLUTCH PIN WASHER	ME120132041	1
19	PREMSA EMBRAGUE / PRESSURE PLATE	ME120132006	1
20	CASQUILLO EMPUJADOR EMBRAGUE / CLUTCH PIN BUSHING	ME120132044	1
21	SEEGER EJE 15 EMBRAGUE / CLUTCH SEEGER AXLE 15	ME25632017	1
22	MUELLE EMBRAGUE 39.5X18X2.3X5 PAS EC125-2001 / CLUTCH SPRING	ME120132015	5
23	ARANDELA 6X18X1,5 / 6X18X1,5 WASHER	T4006018	5
24	ALLEN 6X20 12.9 / ALLEN BOLT 6X20 12.9	T0306020	5
25	DISCO EMBRAGUE ALUMÍNIO / ALUMINIUM CLUTCH DISK	ME120132038	4
26	ARANDELA EMBRAGUE 20,15X38X3,25 / 20,15X38X3,25 CLUTCH WASHER	M03226000	1
27	COJINETE CAMPANA EMBRAGUE K25X29X10 / PRIMARY BEARING	M02616000	1
28	CAMPANA EMBRAGUE / DRIVEN GEAR	ME120132004	1
29	VARILLA EMBRAGUE / CLUTCH ROD.	ME120132040	1
31	PINZA EMBRAGUE HIDRÁULICO / HYDRAULIC CLUTCH CALIPER	ME120132026	1
32	ARANDELA LATIGUILLO / HOSE WASHER	BE25622007	2
33	SANGRADOR / BLEEDER	BE25622060	1

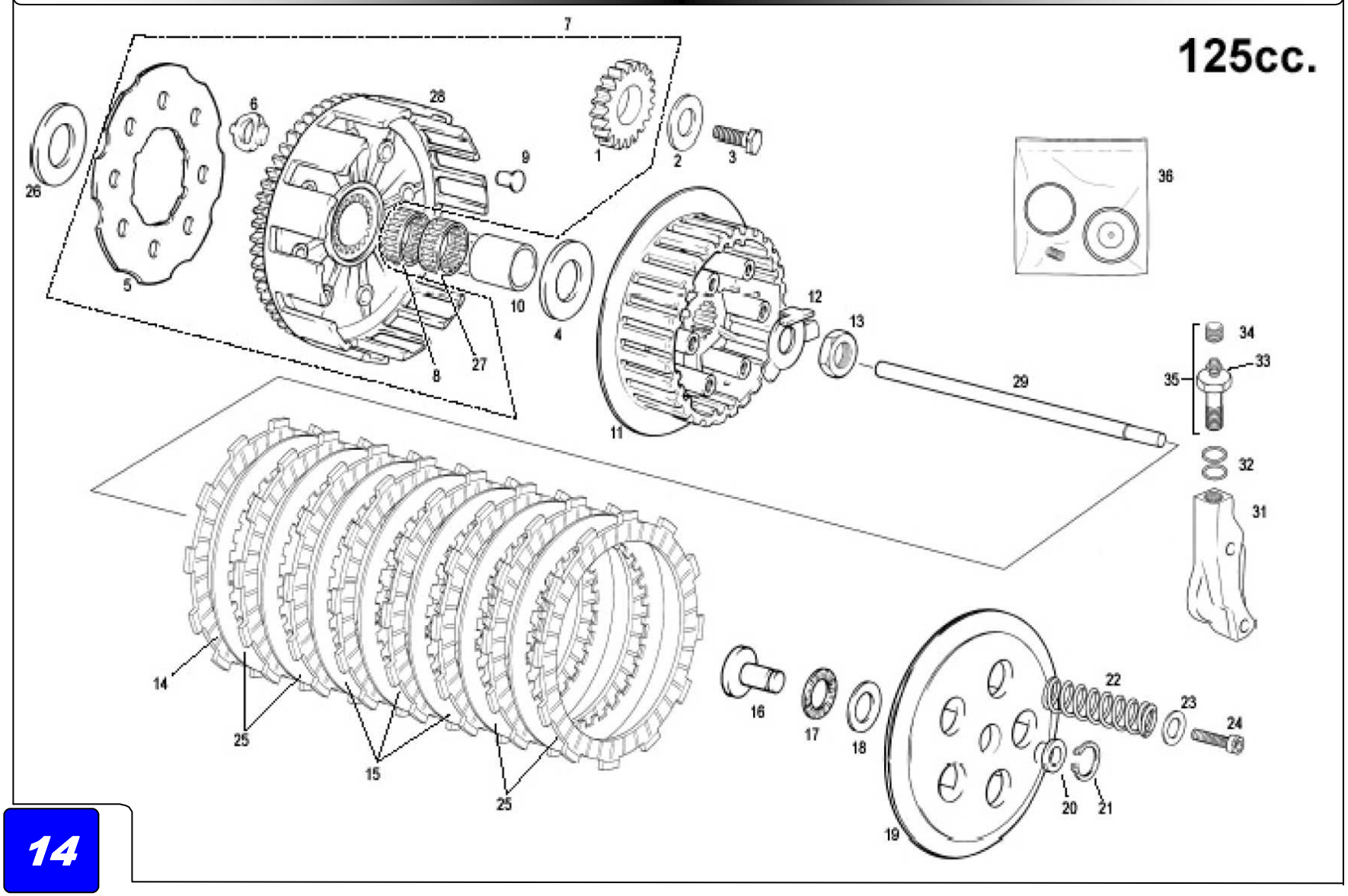
125cc.
7
28
6
26
5
9
1
2
3
36
10
4
8
27
12
13
11
29
34
33
35
32
31
14
25
15
25
16
17
18
19
22
23
24
20
21

Nº	DESCRIPCION / DESCRIPTION	125	Cant.
34	TAPÓN SANGRADO / BLEEDER CAP	BT27922055	1
35	RACORD PINZA EMBRAGUE / RACORD CLUTCH CALIPER	MO1060000	1
36	KIT REPARACIÓN PINZA EMBRAGUE / CLUTCH CALIPER REPARATION KIT	BE120522050	1

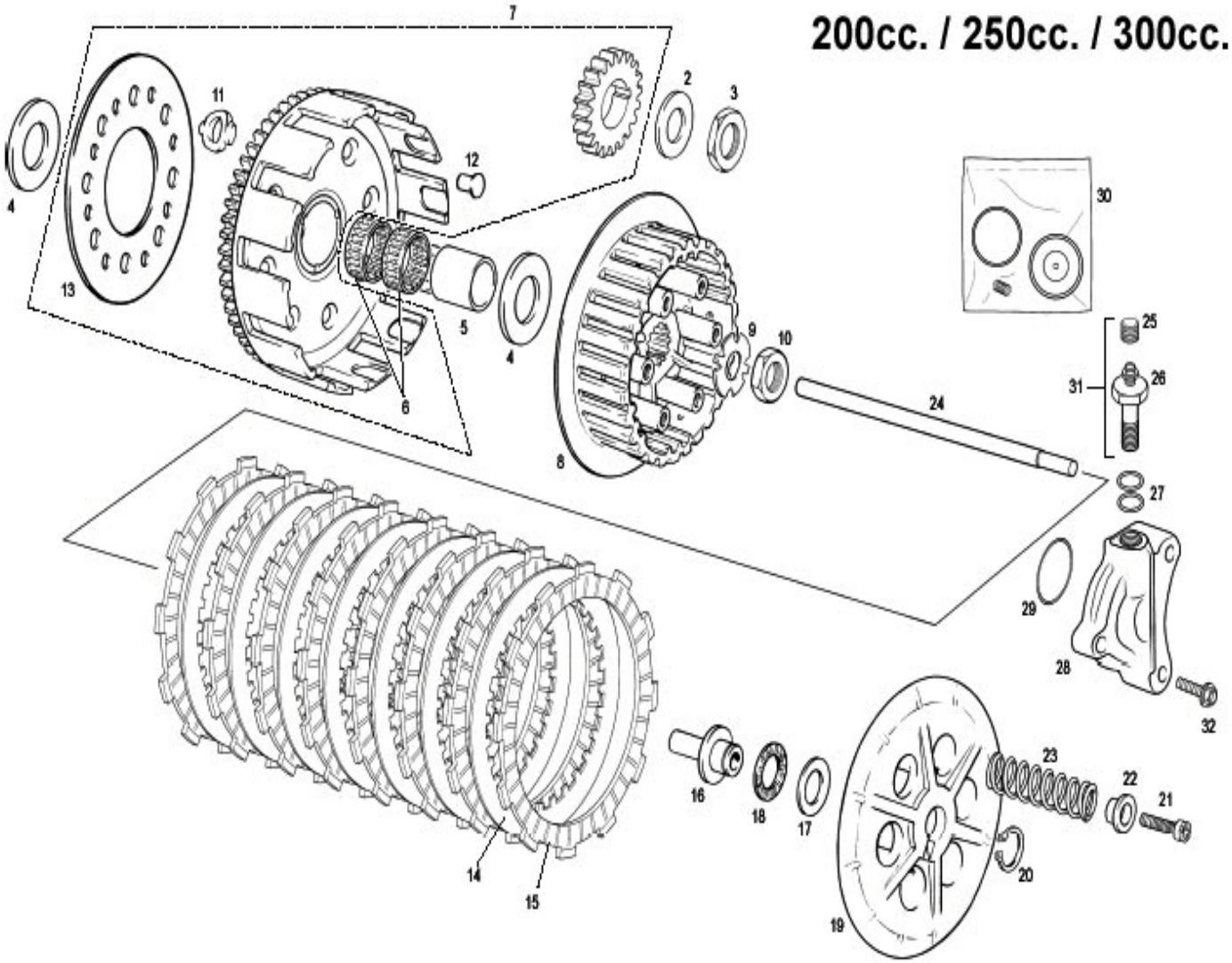
200cc. / 250cc. / 300cc.
7
2
3
11
12
4
13
5
4
6
8
9
10
24
30
25
31
26
27
29
28
32
16
18
17
23
22
21
20
19
14
15

Nº	DESCRIPCION / DESCRIPTION	200	250/300	Cant.
2	ARANDELA BISELADA DE. 20/125 / WASHER 20/125		ME25632019	1
3	TUERCA BLOCAJE PIÑÓN CIGÜEÑAL / CRANK SHAFT PINION LOCKING NUT		ME250032018	1
4	ARANDELA CAMPANA EMBRAGUE 22,1X42X2,8 / WASHER 22.1X42X2.8		ME25632011	2
5	CASQUILLO CAMPANA EMBRAGUE / PRIMARY DRIVEN GEAR BUSHING		ME25632012	1
6	COJINETE CAMPANA EMBRAGUE / PRIMARY DRIVEN GEAR BEARING		ME25632029	2
7	CTO. CORONA CAMPANA EMBRAGUE / PRIMARY DRIVEN GEAR SET	ME20932003CT	ME250432003CT	1
8	CUBO EMBRAGUE / CLUTCH BOSS		ME25632005	1
9	ARANDELA PRECINTO EMBRAGUE / CLUTCH LOCK WASHER		ME25632022	1
10	TUERCA FIJ. CUBO EMBRAGUE / CLUTCH BOSS NUT		ME25632028	1
11	GOMA SILENBLOCK / SILENBLOCK RUBBER		ME20932008	8
12	REMACHES CAMPANA EMBRAGUE / PRIMARY DRIVEN GEAR RIVETS		ME250132010	8
13	ARANDELA CORONA EMBRAGUE / CLUTCH BOSS WASHER		ME20932009	1
14	DISCO EMBRAGUE HIERRO / IRON CLUTCH DISK		ME25632037	7
15	DISCO EMBRAGUE FORRADO / COVERED CLUTCH DISK		ME25632007	8
16	BOLET EMBRAGUE / CLUTCH PIN		ME25632014	1
17	PLACA AGUJA Y VALV. ESCAPE / EXHAUST PIN WASHER		ME25632016	1
18	JAULA AGUJA VALV. ESCAPE / NEEDLES BEARING		ME25632046	1
19	PRENSA EMBRAGUE / PRESSURE PLATE		ME25632006	1
20	SEEGER EJE 15 EMBRAGUE / CLUTCH SEEGER AXLE 15		ME25632017	1
21	ALLEN 6X20 TA. EMBRAGUE,CART,SUSP. / ALLEN BOLT 6X20		T0306020	6
22	CASQ. MUELLE EMBRAGUE ALUMINIO / ALUMINIUM CLUTCH SPRING BUSHING		ME250032020	6
23	MUELLE EMBRAGUE / CLUTCH SPRING		ME25632015	6
24	VARILLA EMBRAGUE / CLUTCH ROD		ME25632040	1
25	TAPÓN SANGRADOR / BLEEDER CAP		BE25622055	1
26	SANGRADOR / BLEEDER		BE25622060	1
27	ARANDELA LATIGUILLO / HOSE WASHER		BE25622007	2
28	PINZA EMBRAGUE HIDRA. / HYDRAULIC CLUTCH CALIPER		ME25632026	1
29	TORICA BOMBA EMBRAGUE / CLUTCH PUMP O'RING		ME25632024	1
30	KIT REPARACIÓN PINZA EMBRAGUE / CLUTCH CALIPER REPARATION KIT		BE250522050	1
31	RACORD PINZA EMBRAGUE / RACORD CLUTCH CALIPER		M01060000	1
32	TORNILLO ESPECILA 6X20 / SPECIAL SCREW		T0206020	1

125cc.

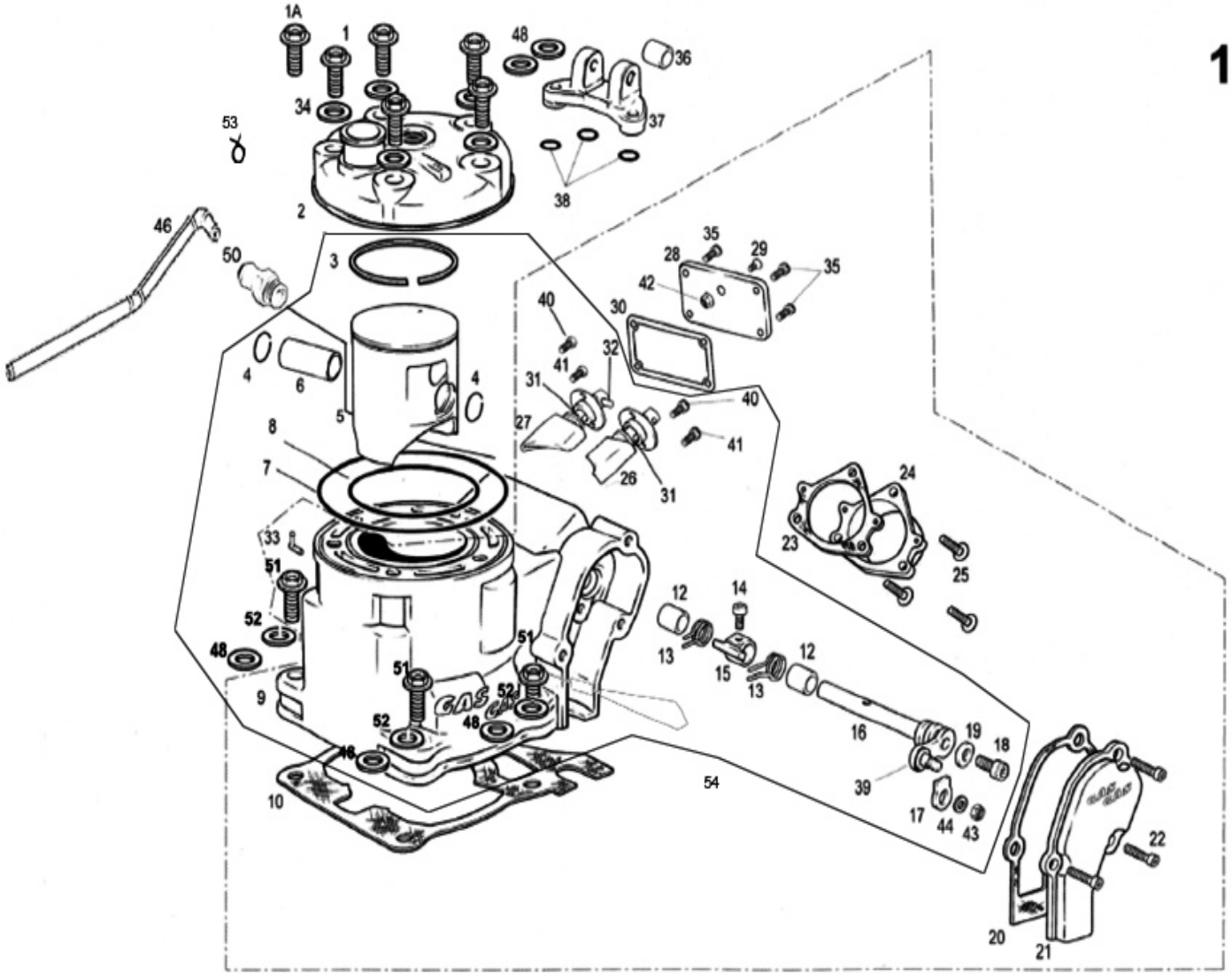
1A
1
48
36
34
37
53
38
2
46
50
3
35
28
29
35
42
40
30
32
41
31
4
6
4
40
27
5
41
8
26
31
7
24
33
23
25
51
12
14
52
13
15
12
48
51
13
51
52
9
52
48
16
19
18
48
54
39
10
17
44
43
22
20
21

Nº	DESCRIPCION / DESCRIPTION	125	Cant.
1A	TORNILLO ESPECIAL 8X55 / SPECIAL BOLT	T0208055	3
1	HEXAGONAL 8X40 CON ARANDELA / HEXAGONAL BOLT WITH WASHER	T0208040	4
2	CULATA TT125CC / 125 CYLINDER HEAD	ME750001209	1
3	ARO PISTÓN 0,8 / PISTON RING	ME710101210	1
4	CLIP BULÓN / PISTON PIN DIPS	ME120116126	2
5	PISTÓN TT125CC PLANO / FLAT 125 PISTON	ME710001210	1
5A	PISTÓN B / PISTON	ME711051210	1
5B	PISTÓN C / PISTON	ME120616122	1
6	BULÓN PISTÓN / PISTON PIN	ME120116125	1
7	TÓRICA CULATA EXT. 1.78X91.7 / OUTER CYLINDER HAED O'RING	ME120116060	1
8	TÓRICA CULATA INT. VITON 1.78X63.22 / INNER CYLINDER HEAD O'RING	ME120116065	1
9	CILINDRO 125 ENDURO / 125 ENDURO CYLINDER	ME700001209	1
10	JUNTA CILINDRO EC125 0.5 / CYLINDER GASKET 0,5	ME120144000	1
10A	JUNTA CILINDRO 0,3 / CYLINDER GASKET 0,3	ME120144009	1
10B	JUNTA CILINDRO 0,15 / CYLINDER GASKET 0,15	ME120144010	1
12	CASQUILLO EJE VÁLVULA ESCAPE / EXHAUST VALVE AXLE BUSHING	ME120116051	2
13	MUELLE EJE VÁLVULA ESCAPE / EXHAUST VALVE AXLE SPRING	ME120116052	2
14	ALLEN ESPECIAL 4X8 / SPECIAL 4X8 ALLEN SCREW	T0304008	1
15	PALANCA MUELLE VÁLVULA / LEVER VALVE SPRING	ME120116053	1
16	EJE VÁLVULA ESCAPE CILINDRO EC125 / EXHAUST VALVE AXIS	ME723001209	1
17	PLANCHA FIJACIÓN EJE VÁLVULA / EXHAUST AXLE VALVE PLATE	ME120116114	1
18	ALLEN 5X10 / ALLEN BOLT 5X10	T0305010	1
19	ARANDELA 5X12X1,5 / 5X12X1,5 WASHER	T4005012	1
20	JUNTA TAPA VÁLV. DRCHO. 1MM / RIGHT VALVE COVER GASKET 1MM	ME120144007	1
21	TAPA VÁLVULA DRCHA. EC125 / RIGHT VALVE COVER	ME120110002	1
22	ALLEN 5X12 / ALLEN BOLT 5X12	T0305012	3
23	JUNTA ESCAPE / EXHAUST GASKET	ME120144012	1
24	TUBERA ESCAPE AL. / EXHAUST PIPE	ME120316019	1
25	HEXAGONAL CON ARANDELA 6X14 / 6X14 HEXAGONAL BOLT WITH WASHER	T0206014	3
26	VÁLVULA ESCAPE DERECHA / LEFT EXHAUST VALVE	ME720001208	1
27	VÁLVULA ESCAPE IZQUIERDA / RIGHT EXHAUST VALVE	ME720101209	1
28	TAPA VÁLVULA CENTRAL / CENTRAL VALVE COVER	ME120510003CT	1
29	ALLEN CÓNICO M6X10 / M6X10 CONIC ALLEN	T0406010	1

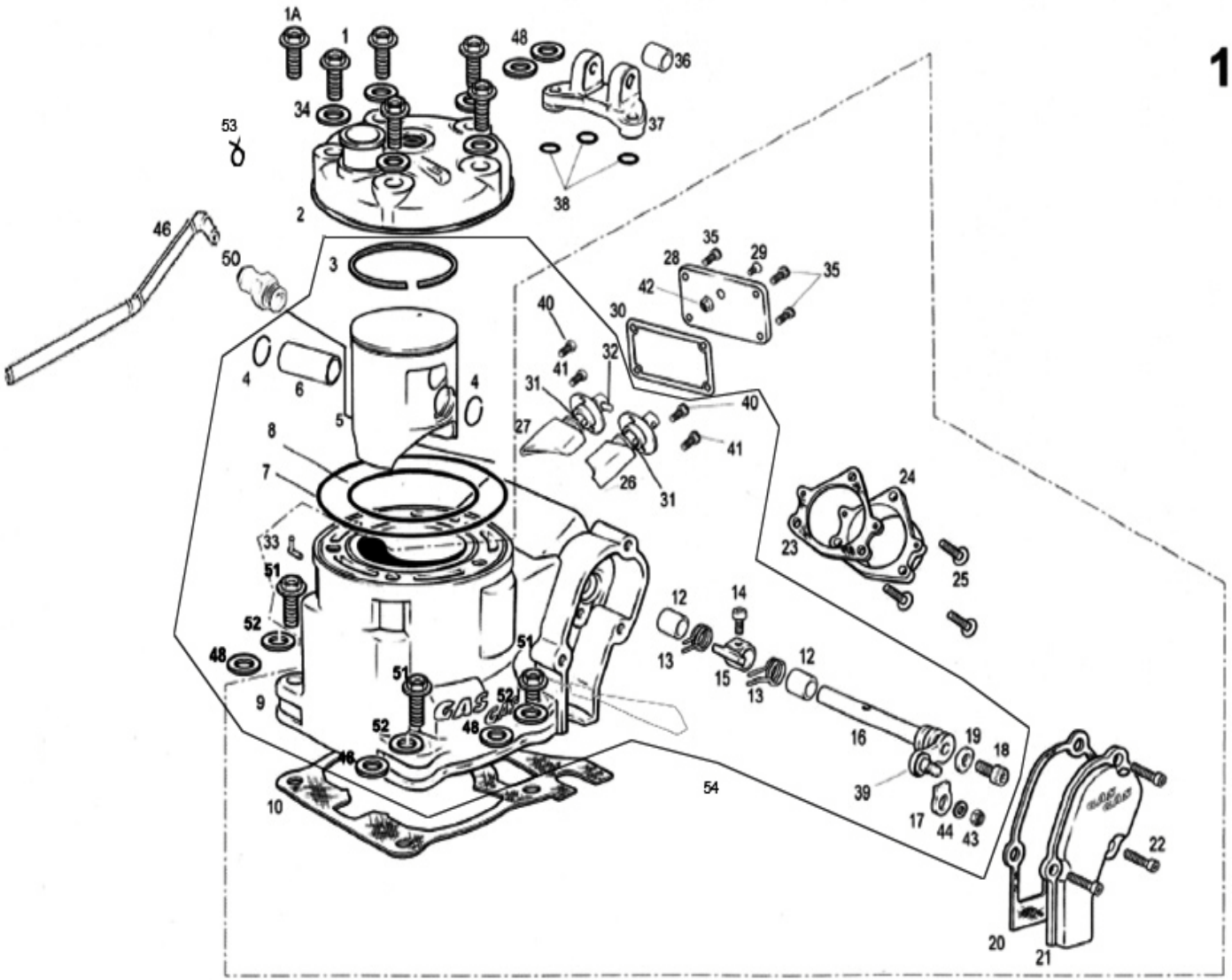
125cc.
1A
1
48
36
34
37
53
38
2
46
50
3
35
28
29
35
42
40
30
32
41
31
40
4
6
4
27
41
5
8
26
31
7
24
33
23
25
51
12
14
52
13
15
12
48
51
13
51
52
9
52
48
16
19
18
46
39
54
10
17
44
43
22
20
21

Nº	DESCRIPCION / DESCRIPTION	125	Cant.
30	JUNTA VÁLVULA CENTRAL / CENTRAL VALVE GASKE	ME120144006	2
31	GUÍA VÁLVULA ESCAPE / EXHAUST GUIDE VALVE	ME120516054	2
32	AGUJA VÁLVULA ESCAPE / EXHAUST NEEDLE VALVE	ME120216055	2
33	DESVAPORIZADOR / DESVAP.	MIT50010012	1
34	ARANDELA COBRE 8X16X1,5 / 8X16X1,5 WASHER	T4008516	5
35	TORNILLO ULS 5X10 / 5X10 ULS BOLT	T0505010	4
36	CASQUILLO SOPORTE TIRANTE CULATA CROSS / CYLINDER HEAD BRACE BUSHING	BC120310149	1
37	SOPORTE TIRANTE CULATA CROSS 125 / CYLINDER HEAD BRACE SUPPORT	BC120310049	1
38	TÓRICA SOPORTE TIRANTE CULATA 12.42x1.78 CROSS / SUPPORT O'RING	BC120310170	3
39	PALANCA VÁLVULA ESCAPE EC125 / EXHAUST VALVE LEVER	ME120116050	1
40	ALLEN 5x12 / 5X12 ALLEN BOLT	T0305012	2
41	TORNILLO UFK M5x12 / UFK 5X12 BOLT	T0315012	1
42	TUERCA CON ARANDELA ESTRIADA M6 / M6 NUT WITH WASHER	T2206000	1
43	TUERCA AUTOBL. M5 / SELF-LOCKING NUT M5	T2105001	1
44	ARANDELA 5X12X1.5 / WASHER 5X12X1.5	T4005012	1
46	TUBO VALVULA / VALVE TUBE	BE733001209	1
47	ALLEN 6X10 / 6X10 ALLEN BOLT	T0306010	2
48	ARANDELA 8X16X1,5 / WASHER 8X16X1,5	T4008016	6
49	CONJUNTO CILINDRO EC 125 , 08 / CYLINDER SET EC 125 , 08	ME70000CT1209	1
50	RACORD DESVAPORIZADOR /RACORD	ME702001209	1
51	TORN. ALLEN 8X45 / ALLEN 8X45	T0308045	4
52	ARANDELA GROBER / GROBER WASHER	T4008314	4
53	ABRAZADERA /	BE250210047	1
54	KIT CILINDRO Y PISTÓN CON VÁLVULAS	MT70000CT1209	1

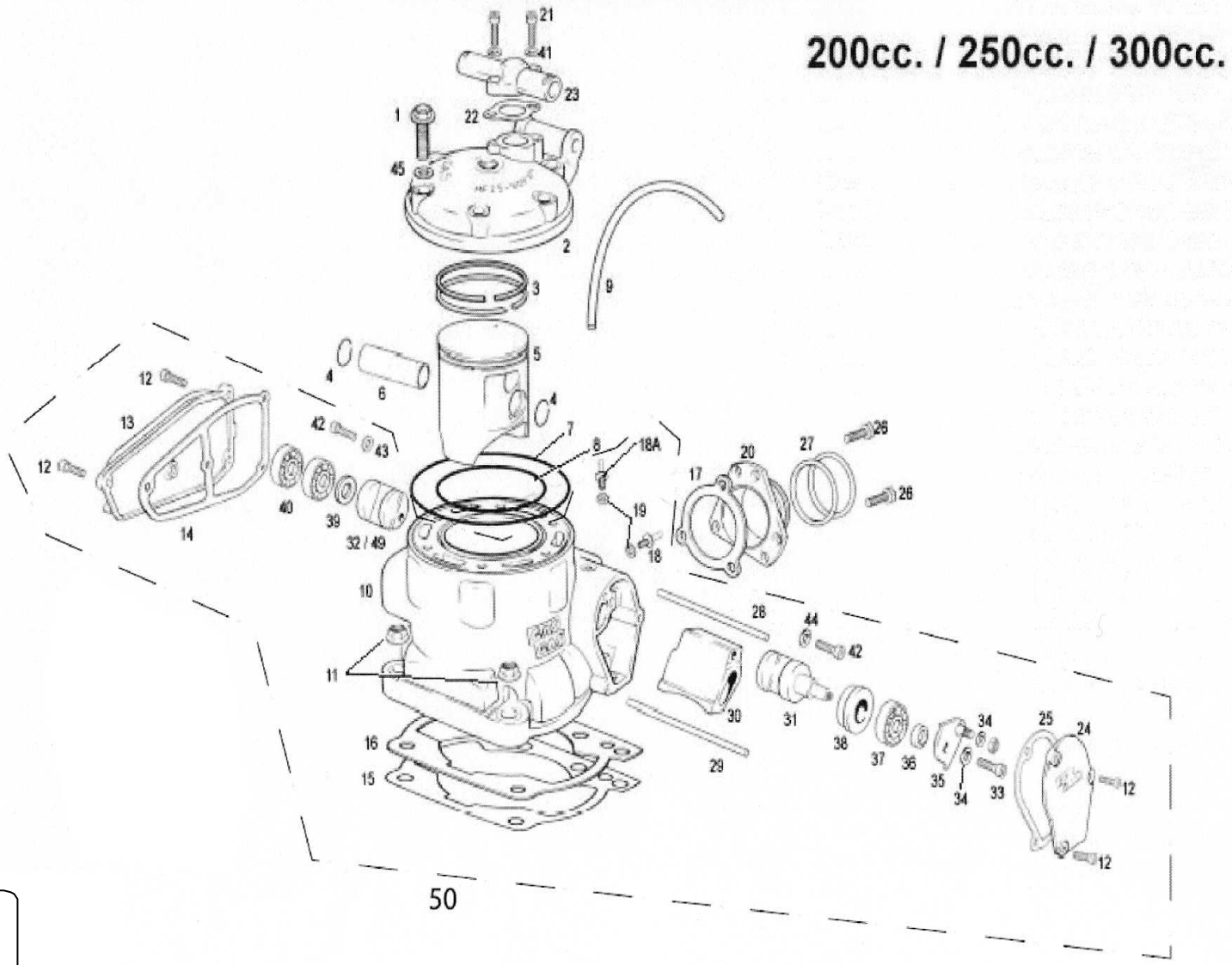
200cc. / 250cc. / 300cc.
21
41
23
1
22
45
2
3
9
5
4
6
4
12
13
42
43
7
8
18A
20
27
26
12
17
26
19
40
39
32 / 49
14
18
10
28
44
42
11
30
31
34
25
24
16
38
37
36
35
34
33
12
15
29
12
50

Nº	DESCRIPCION / DESCRIPTION	200	250	300	Cant.
1	HEXAGONAL 8X40 / HEXAGONAL BOLT 8X40	-	T0218040	-	6
2	CULATA / CYLINDER HEAD	ME750002008	ME250016000	ME300016000	1
3	JUEGO AROS PISTON / PISTON RINGS SET	ME20916040	ME25616040	ME30916040	1
4	CLIP BULÓN / PISTON PIN CLIPS	-	ME25616126	-	2
5	PISTÓN (*) / PISTON (*)	ME20816020	ME25616020R	ME300416020	1
6	BULÓN PISTÓN / PISTON PIN	-	ME25616125	-	1
7	TÓRICA CULATA EXTERIOR / OUTER CYLINDER HEAD O'RING	M01619135	ME25916060	ME25916060	1
8	TÓRICA CULATA INTERIOR / INNER CYLINDER HEAD O'RING	ME25916065	ME25916065	ME30916065	1
9	TUBO DESVAPORIZADOR CARTER / CARTER BREATH TUBE	-	ME25610022	-	1
10	CILINDRO / CYLINDER	ME20916022	ME25916022	ME300216022	1
11	TUERCA CILINDRO ESPECIAL 10/150 / CYLINDER NUT 10/150		M01613001		4
12	TORNILLO ESPECIAL 5X15 / SPECIAL BOLT 5X15		T0205015		7
13	TAPA VÁLVULA IZQUIERDA / LEFT VALVE COVER		ME25610003		1
14	JUNTA TAPA VÁLVULA IZQUIERDA / LEFT VALVE COVER GASKET		ME25644006		1
15	JUNTA CILINDRO 0,15 / CYLINDER GASKET 0.15		ME25644010		1
16	JUNTA CILINDRO 0,5 / CYLINDER GASKET 0,5		ME25644000		1
16A	JUNTA CILINDRO 0,3 / CYLINDER GASKET 0,3		ME25644009		1
17	JUNTA ESCAPE / EXHAUST GASKET		ME25644012		1
18	DESVAPORIZADOR DIAM. 0,5 / 0,5 DEVAP.		ME25710012		2
18A	DESVAPORIZADOR DIAM. 3 / 3 DEVAP.		ME25610012		2
19	ARANDELA FIBRA 6X10X1,5 / FIBER WASHER 6X10X1,5		T4006010		2
20	TUBERA ESCAPE / EXHAUST PIPE		ME250516019		1
21	ALLEN 6X20 / ALLEN BOLT 6X20		T0306020		3
22	JUNTA TAPA TERMOSTATO / THERMOSTAT COVER GASKET		ME25944011		1
23	TAPA TERMOSTATO / THERMOSTAT COVER		ME250316001		1
24	TAPA VÁLVULA DERECHA / RIGHT VALVE COVER		ME25610002		1
25	JUNTA TAPA VÁLV. DERECHA 1MM. / RIGHT VALVE COVER GASKET 1MM		ME25644007		1
26	HEXAGONAL CON ARANDELA 6X14 / 6X14 HEX. BOLT WITH WASHER		T0206014		3
27	TÓRICA TUBERA ESCAPE VITON 44X3 / EXHAUST PIPE O'RING 44X3		BE250526006		2
28	EJE VÁLVULA ESC. LARGO 93 MM. / LONG EXHAUST VALVE AXIS 93MM		ME25616027		1
29	EJE VÁLVULA ESC. CORTO 83 MM. / SHORT EXHAUST VALVE AXIS 83MM		ME25616017		1
30	VÁLVULA ESCAPE CENTRAL / CENTRAL EXHAUST VALVE	ME20916015	ME25616015		1

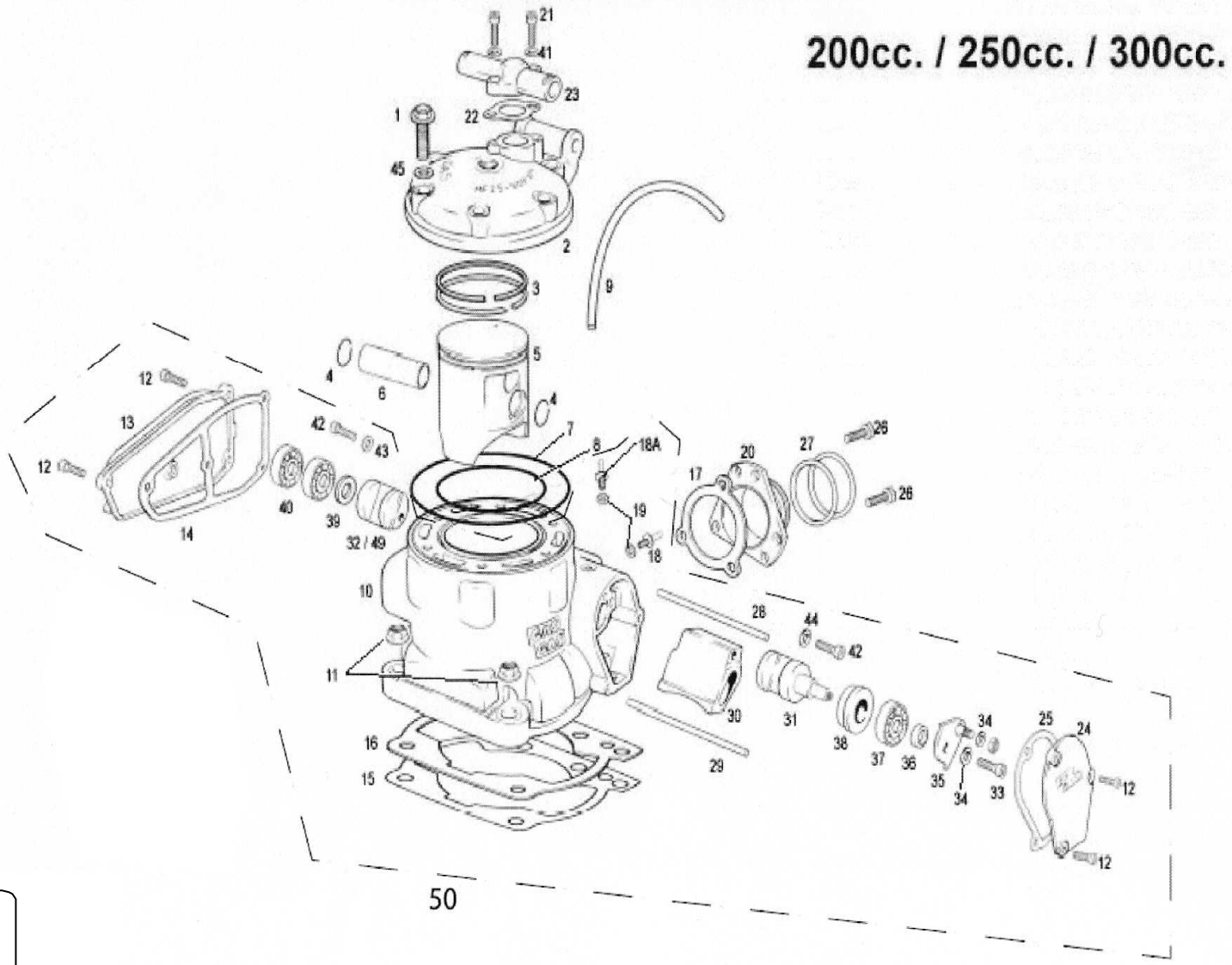
200cc. / 250cc. / 300cc.
21
41
23
1
22
45
2
3
9
5
4
6
4
12
13
42
43
7
8
18A
20
27
26
12
17
26
19
40
39
32 / 49
14
18
10
28
44
42
11
30
31
34
25
24
16
38
37
36
35
34
33
12
15
29
12
50

Nº	DESCRIPCION / DESCRIPTION					250	300	Cant.
31	VÁLVULA ESCAPE DERECHA / RIGHT EXHAUST VALVE					ME25616016		1
32	VÁLVULA ESCAPE IZQUIERDA / LEFT EXHAUST VALVE					ME25616014		1
33	ALLEN 5x12 / ALLEN BOLT 5x12					T0305012		1
34	ARANDELA PLANA 5X12X1,5 / PLAIN WASHER 5X12X1.5					T4005012		2
35	CTO. PALANCA VÁLVULA ESCAPE / EXHAUST VALVE BRACKET SET					ME25616050		1
36	SEP. COJINETE VÁLV. ESC. / EXHAUST VALVE BEARING SPACER					ME25916048		1
37	RODAMIENTO BOMBA AGUA / WATER PUMP BEARING					ME25610010		1
38	DIST. COJINETE VÁLVULA ESCAPE / EXHAUST VALVE BEARING SPACER					ME25616036		1
39	ARANDELA DE 8X16X1,5 / WASHER 8X16X1.5					T4008016		1
40	RODAMIENTO EJE CENTRÍFUGO Y BOMBA / AXIS BEARING					ME25616032		2
41	ARANDELA COBRE 6X10X1,5 / 6X10X1,5 WASHER					ME25916002		2
42	ALLEN 6X10 / 6X10 ALLEN BOLT					T0306010		2
43	ARANDELA 6X18X1,5 / 6X18X1,5 WASHER					T4006018		1
44	ARANDELA 6X12X1,5 / 6X12X1,5 WASHER					T4006012		1
45	ARANDELA COBRE 8X16X1,5 / 8X16X1,5 WASHER					T4008516		6
49	VÁLVULA ESCAPE IZQ HOMOLOGADA / ACCREDITED LEFT EXHAUST VALVE					ME25616014H	ME25616014H	1
(*)	PISTÓN TIPO B / B TYPE PISTON					ME25616121R	ME300416121	1
	PISTÓN TIPO C / C TYPE PISTON					ME25616122R	ME300416122	1
50	CONJUNTO CILINDRO / CYLINDER SET					ME25916022CT	ME300216022CT	1

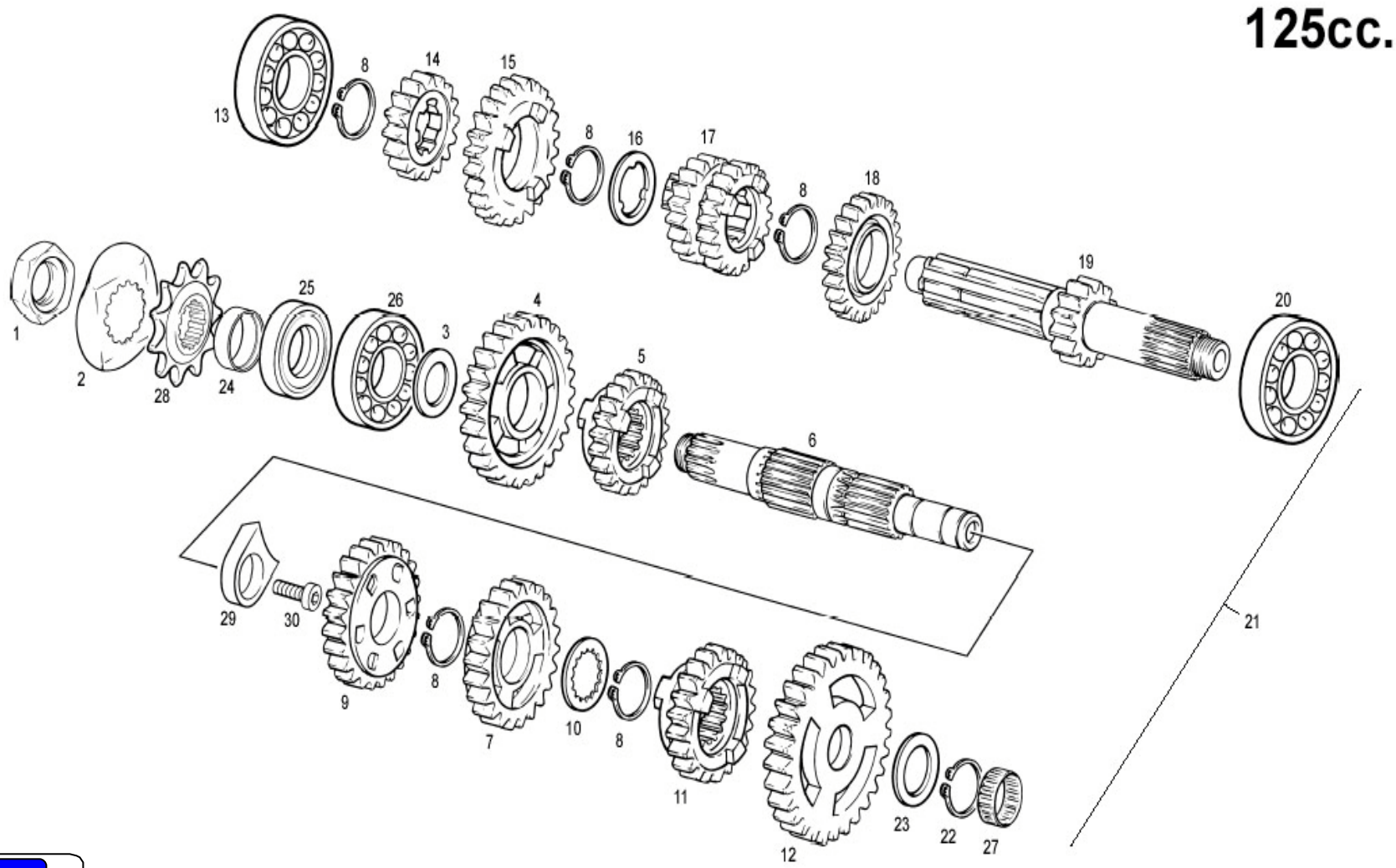
125cc.
13
8
14
15
8
16
17
8
18
19
20
1
2
28
24
25
26
3
4
5
6
29
30
9
8
7
10
8
11
12
23
22
27
21

Nº	DESCRIPCION / DESCRIPTION	125	Cant.
1	TUERCA PIÑON SALIDA / FRONT SPROCKET NUT	ME120136021	1
2	ARANDELA PRECINTO PIÑON SALIDA / FRONT SPROCKET NUT WASHER	ME120136121	1
3	ARANDELA CAMBIO 2MM. / 2MM. SHIFT WASHER	ME120136101	1
4	PIÑÓN SECUNDARIO II 2MM. / SECONDARY GEAR II	ME120136077	1
5	PIÑÓN SECUNDARIO VI / SECONDARY GEAR VI	ME120136081	1
6	EJE SECUNDARIO / SECONDARY AXIS	ME120136075	1
7	PIÑÓN SECUNDARIO IV / SECONDARY GEAR IV	ME120136079	1
8	CIRCLIP D.22 DIN 471 / CIRCLIP DIN 471	MT280236166	5
9	PIÑÓN SECUNDARIO III / SECONDARY GEAR III	ME120136078	1
10	ARANDELA A22X19,5 DIN7480 / A22X19,5 DIN7480 WASHER	ME120136091	1
11	PIÑÓN SECUNDARIO V / SECONDARY GEAR V	ME120136080	1
12	PIÑÓN SECUNDARIO I / SECONDARY GEAR I	ME120536076	1
13	RODAMIENTO CAMBIO 6202C3 / SHIFT BEARING	ME120136057	1
14	PIÑÓN PRIMARIO II / PRIMARY GEAR II	ME120136071	1
15	PIÑÓN PRIMARIO VI / PRIMARY GEAR VI	ME120136074	1
16	ARANDELA ESTRIADA 3 PUNTAS 18,25X22,15X0,5 / 18,25X22,15X0,5 WASHER	ME120136100	1
17	PIÑÓN PRIMARIO III Y IV / PRIMARY GEAR III AND IV	ME120136072	1
18	PIÑÓN PRIMARIO V / PRIMARY GEAR V	ME120136073	1
19	EJE PRIMARIO / PRIMARY AXIS	ME120136070	1
20	RODAMIENTO CAMBIO 6204ZC4 / SHIFT BEARING	ME120136056	1
21	CTO. GRUPO CAMBIO COMPLETO EC125-2001 / SHIFT GEAR SET	ME120536010	1
22	CIRCLIP D15 DIN471 / D15 DIN471 CIRCLIP	ME25632017	1
23	ARANDELA 15,15X24X0,4 / 15,15X24X0,4 WASHER	ME120136012	1
24	CASQUILLO PIÑON SALIDA / FRONT SPROCKET BUSH	ME120136046	1
25	RETÉN 28X38X7 / FRONT SPROCKET SEAL	ME120136024	1
26	RODAMIENTO 6304C3 / 6304C3 BEARING	ME120136058	1
27	RODAMIENTO TR15X25X12 / TR15X25X12 BEARING	ME120136157	1
28	PIÑÓN SALIDA T13 / FRONT SPROCKET	ME120136025	1
28A	PIÑÓN SALIDA T12	ME120736025	1
29	FIJADOR COJINETE SALIDA CAMBIO / SHIFT OUTER BEARING HOLDER	ME120336104	1
30	TORNILLO UFK M5X12 / UFK SCREW M5X12	T0315012	1

200cc. / 250cc. / 300cc.

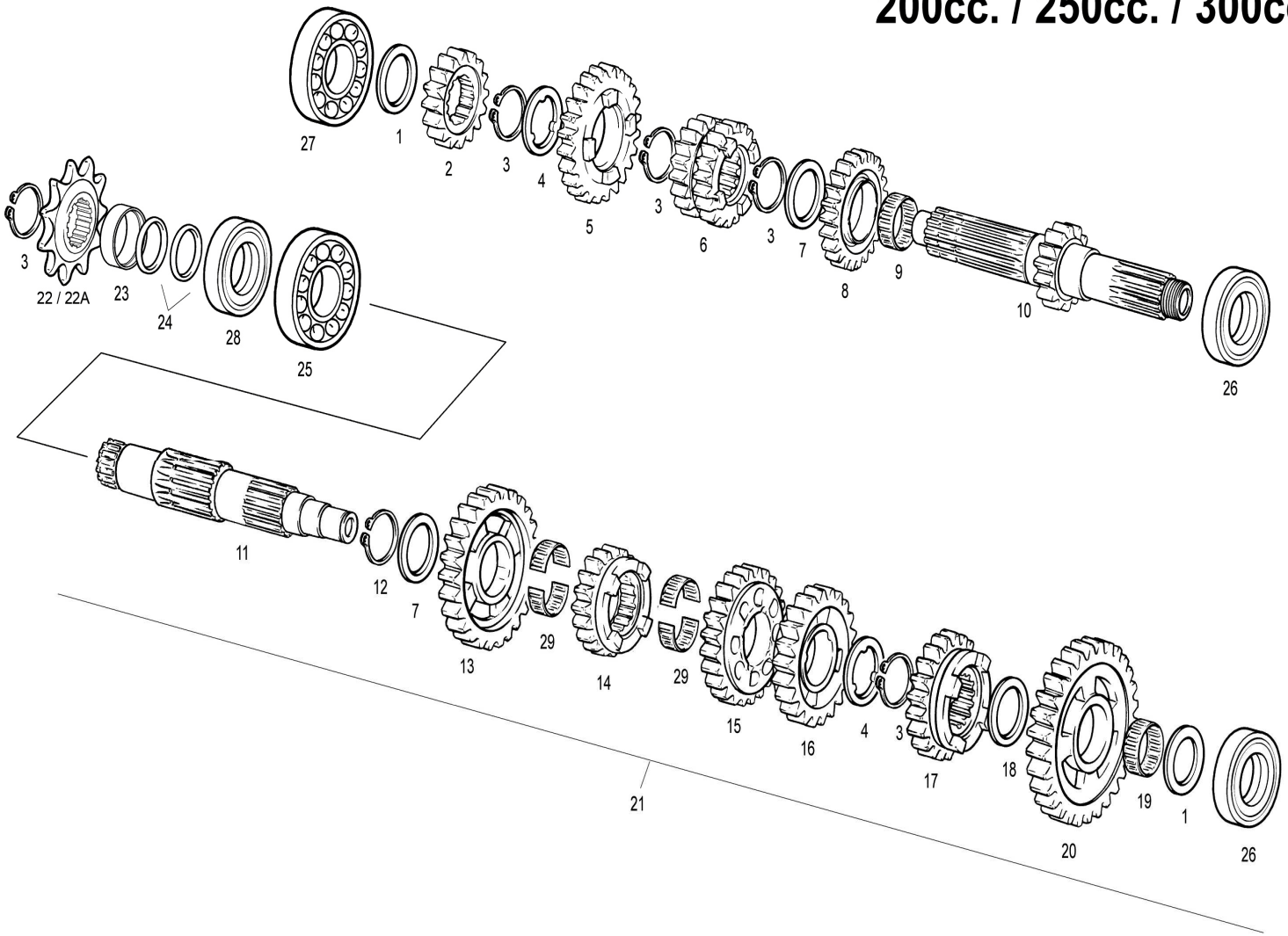

Nº	DESCRIPCION / DESCRIPTION	250/300	Cant.
1	ARANDELA 18X31,5X0,7 CAMBIO / SHIFT WASHER 18X31.5X0.7	ME25636014	2
2	PIÑÓN PRIMARIO II / PRIMARY GEAR II	ME25636071	1
3	CIRCLIP D.25 DIN 471 REBAJADO / CIRCLIP DIN 471	ME25936084	5
4	ARANDELA 31,5X1 ESTRIADA / LOCK WASHER 31.5X1	ME25636091	2
5	PIÑÓN PRIMARIO VI / PRIMARY GEAR VI	ME25636074	1
6	PIÑÓN PRIMARIO III Y IV / PRIMARY GEAR III & IV	ME25636072	1
7	ARANDELA 25,2X31,5X1 CAMBIO / SHIFT WASHER 25.2X31.5X1	ME25636017	2
8	PIÑON PRIMARIO V / PRIMARY GEAR V	ME25636073	1
9	COJINETE AGUJAS K25-29-10 / NEEDLES BEARING K25-29-10	M02616000	1
10	EJE PRIMARIO I / PRIMARY AXIS GEAR I	ME25636070	1
11	EJE SECUNDARIO / SECONDARY AXIS	ME410002508	1
12	CIRCLIP D.25 DIN.983 / CIRCLIP D.25 DIN	ME25636095	1
13	PIÑÓN SECUNDARIO II / SECONDARY GEAR II	ME25636077	1
14	PIÑÓN SECUNDARIO VI / SECONDARY GEAR VI	ME250136081	1
15	PIÑÓN SECUNDARIO III / SECONDARY GEAR III	ME25636078	1
16	PIÑÓN SECUNDARIO IV / SECONDARY GEAR IV	ME25636079	1
17	PIÑÓN SECUNDARIO V / SECONDARY GEAR V	ME25636080	1
18	ARANDELA 20,8X29X1 CAMBIO / SHIFT WASHER 20.8X29X1	ME25636016	1
19	ROD. AGUJ. K20X24X10 / NEEDLES BEARING K20X24X10	ME25636059	1
20	PIÑÓN SECUNDARIO I / SECONDARY GEAR I	ME25636076	1
21	GRUPO CAMBIO COMPLETO / SHIFT GEAR SET	ME40000CT2508	1
22	PIÑÓN SALIDA Z.13 / OUTER SPROCKET Z13	ME25636025	1
22A	PIÑÓN SALIDA Z.12 / OUTER SPROCKET Z12	MF25836025	1
23	DOLLA RETÉN SALIDA CAMBIO / SIFHT SEAL	ME25636046	1
24	TÓRICA 25X2 NBR PIÑ.SAL. / O'RING 25X2 NBR	ME25632025	2
25	RODAMIENTO CAMBIO 6305 / SHIFT BEARING 6305	ME25636058	1
26	RODAMIENTO CAMBIO 6203 / SHIFT BEARING 6203	ME25636057	2
27	RODAMIENTO CAMBIO 6205ZC3E / SHIFT BEARING 6205ZC3E	ME250136056	1
28	RETÉN / SEAL	ME25636024	1
29	JAULA AGUJAS KD22X25X9,8 / KD22X25X9,8 NEEDLES BEARING	ME250236102	2

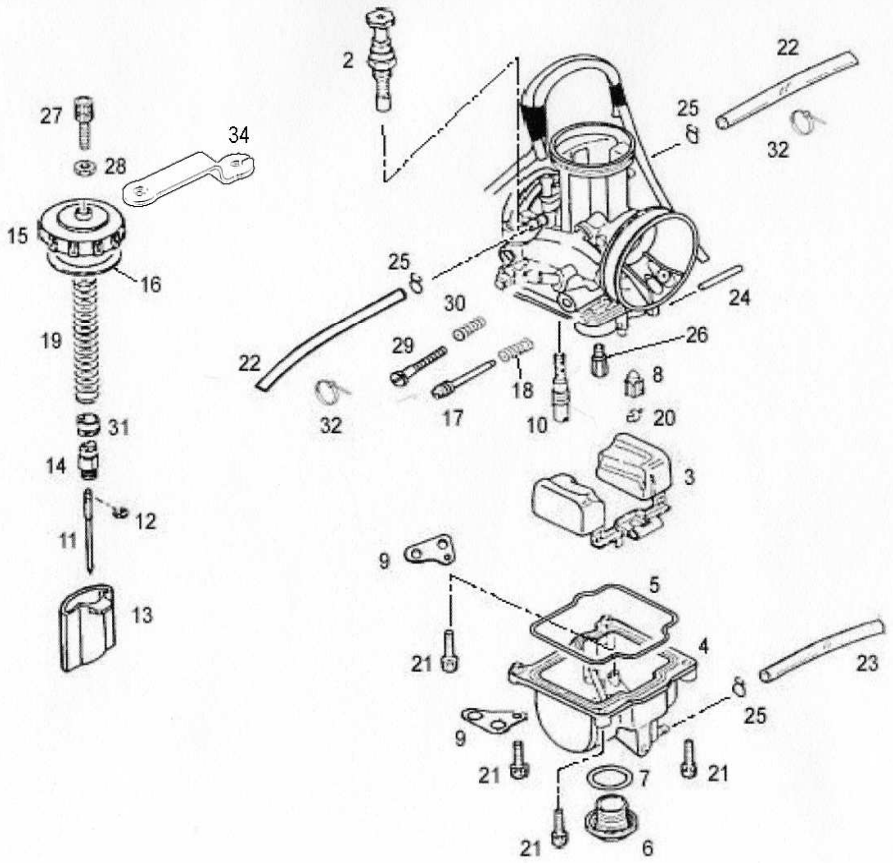
2
22
25
32
27
34
28
15
16
25
30
24
19
29
26
22
18
8
32
17
10
20
31
1
14
3
12
11
9
5
13
21
4
23
25
9
21
7
21
21
6

Nº	DESCRIPCION / DESCRIPTION	125	200	250	300	Cant.
1	CARBURADOR KEIHIN / KEIHIN CARBURETOR	BE780001210		BE780002508	BE780002508	1
2	MANDO ESTARTER / COLD STARTER KNOB SET			ME25690011		1
2A	MANDO ESTARTER CABLE /	BE783002508				1
3	BOYA FLOTADOR / FLOAT			BE781152508		1
4	CUBETA FLOTADOR / FLOAT BODY			BE781202508		1
5	JUNTA CUBETA FLOTADOR / FLOAT BODY GASKET			ME781252508		1
6	TAPÓN CUBETA / FLOAT BODY DRAIN CAP			ME25690015		1
7	TÓRICA TAPÓN CUBETA / DRAIN CAP O'RING			ME25690016		1
8	AGUJA FLOTADOR / FLOAT NEEDLE			ME25690017		1
9	SUJECIÓN TUBO RESPIRADERO / AIR HOSE HOLDER			ME25690018		1
10	CHICLÉ RALENTÍ / SLOW JET	ME120390048		ME25690019	ME25690035	1
11	AGUJA / N0 Z1 NEEDLE	ME120690434				1
11A	AGUJA NO ZH / N0 ZH NEEDLE	ME120690435				1
11B	AGUJA NO HN / N0 HN NEEDLE	ME120190433				1
11C	AGUJA N1 EF / N1 EF NEEDLE			ME250190429	ME250190429	1
11D	AGUJA N1 EE / N1 EE NEEDLE			ME200290427	ME200290427	1
11E	AGUJA N1 EG / N1 EG NEEDLE			ME200290428	ME200290428	1
12	CLIP AGUJA / NEEDLE CLIP			ME25690021		1
13	COMPUERTA / THROTTLE VALVE			ME25690022		1
14	FIJADOR AGUJA-CABLE / NEEDLE HOLDER			ME25690023		1
15	TAPÓN COMPUERTA / CARBURETOR COVER			BE781032508		1
16	JUNTA TAPÓN COMPUERTA / CARBURETOR COVER GASKET			BE781022508		1
17	TORNILLO REGULADOR AIRE / AIR REGULATOR SCREW			ME25690028		1
18	MUELLE REGULADOR AIRE / AIR REGULATOR SPRING			ME25690029		1
19	MUELLE COMPUERTA / CARBURETOR COVER SPRING			ME25690026		1
20	CLIP NIVEL FLOTADOR / FLOAT CLIP			ME25690027		1
21	TORNILLO CUBETA / FLOAT BODY BOLT			BE781182508		6
22	TUBO RESPIRADERO / AIR HOSE			ME25690031		2
23	TUBO RESPIRADERO 2 / AIR HOSE 2			ME25690032		1
24	EJE FLOTADOR / FLOAT AXLE			ME25690033		1
25	CLIP / CLIP			ME25690034		3
26	CHICLE ALTA 185 / 185 HIGH JET			ME25690185	ME25690182	1
27	TENSOR CABLE / CABLE TENSOR			ME25690036		1
28	TUERCA TENSOR CABLE / CABLE TENSOR NUT			ME25690037		1
29	TORNILLO REGULADOR RALEN. / SLOW JET ADJUSTING BOLT			ME25690038		1
30	MUELLE TORN. REGULADOR RALENTI / ADJUSTING BOLT SPRING			ME25690039		1
31	CASQUILLO MUELLE COMPUERTA / COVER SPRING BUSHING			ME25690040		1
32	BRIDA UNEX 2244 4.8X20 / UNEX CLAMP 2244 4.8X20			BE25634009		2
33	*TOPE MANDO DE GAS / STOP THROTTLE CABLE		ME200690010	*ME250690010		1
34	SOPORTE CABLE STARTER / STARTER SUPORT CABLE			BE785702508		1

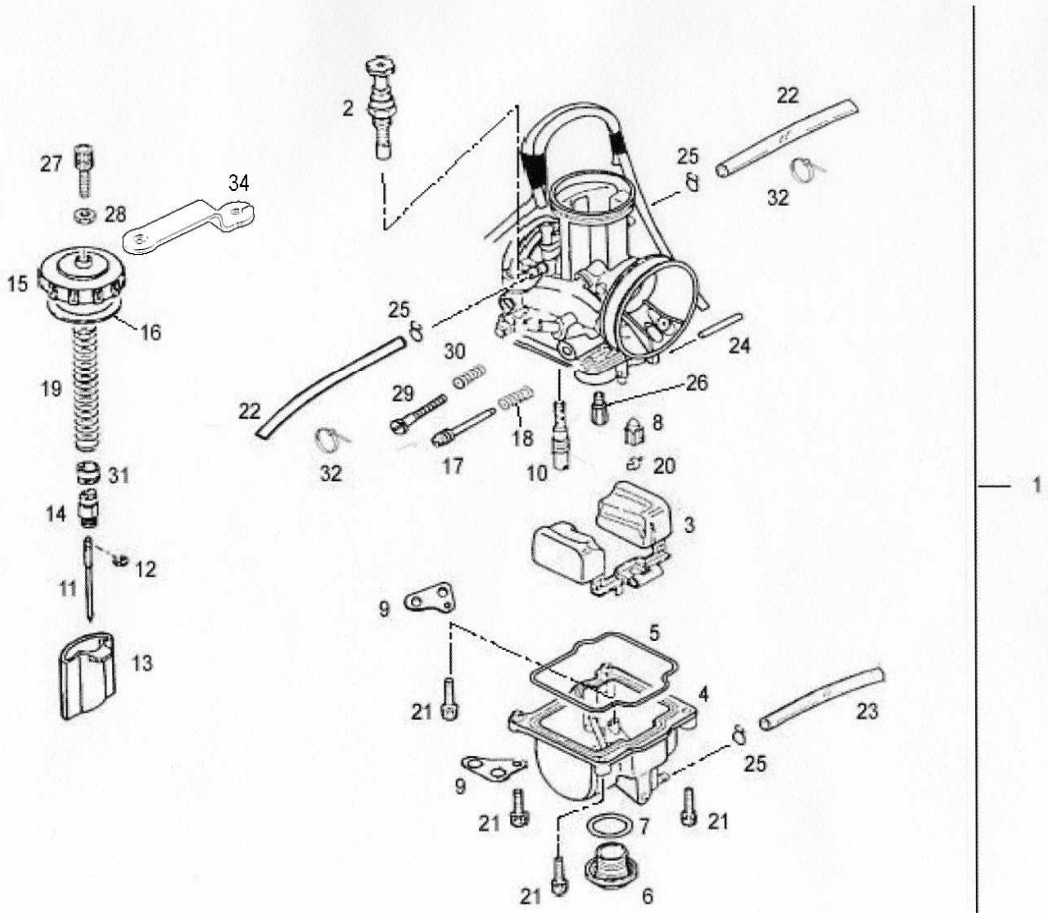
2
22
25
32
27
34
28
15
16
25
30
24
19
29
26
22
18
8
32
17
10
20
31
1
14
3
12
11
9
5
13
21
4
23
25
9
21
7
21
21
6

Nº	DESCRIPCION / DESCRIPTION		250		Cant.
	AGUJA KEIHIN N1EE / KEIHIN N1EE NEEDLE		ME250290427		1
	AGUJA KEIHIN N1EG / KEIHIN N1EG NEEDLE		ME250290428		1
	AGUJA KEIHIN N1EF / KEIHIN N1EF NEEDLE		ME250190429		1

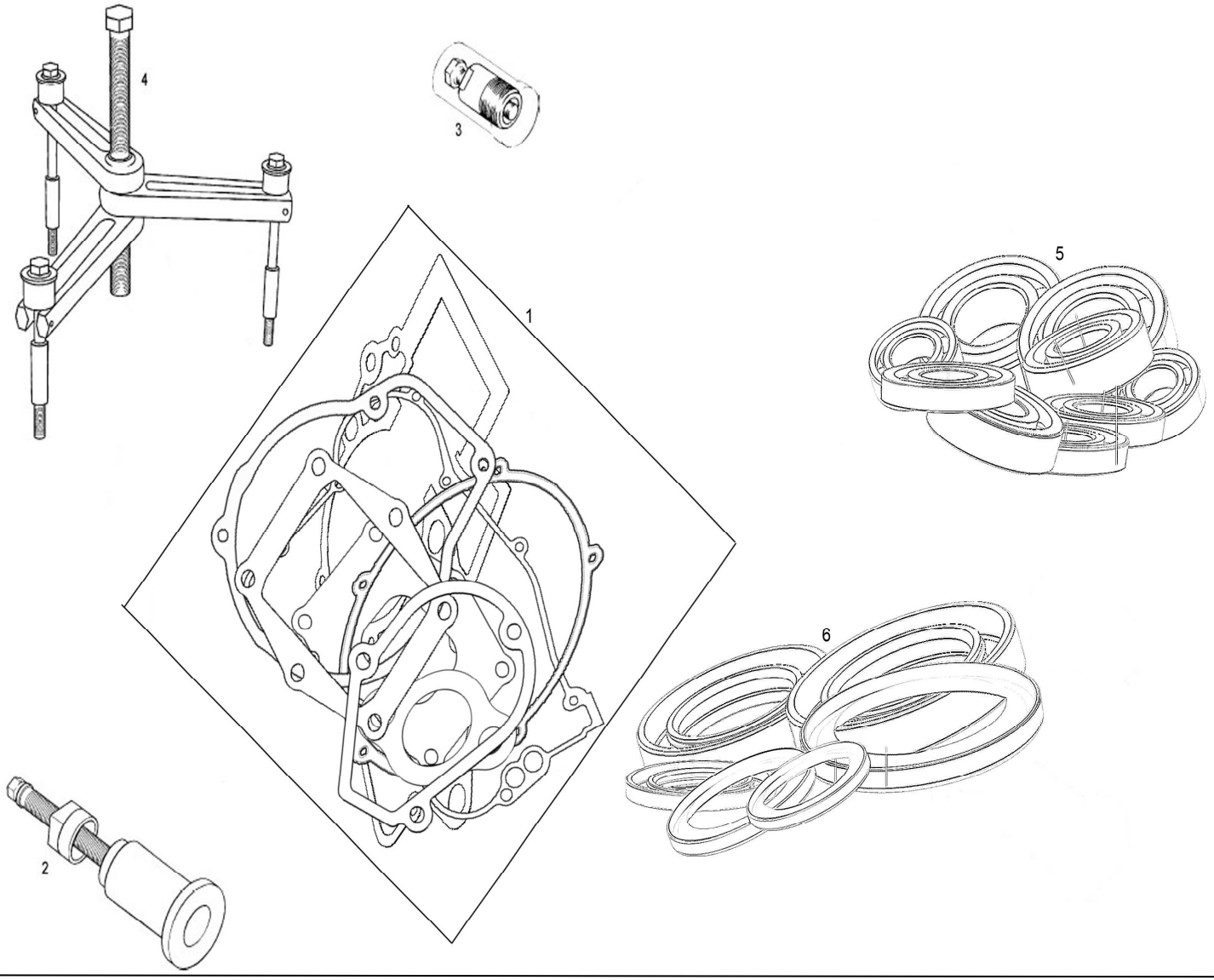
4
3
1
5
6
2

Nº	DESCRIPCION / DESCRIPTION	125	250/300	Cant.
1	KIT DE JUNTAS MOTOR / JOINT MOTOR MEETINGS	ME120144100	ME250544100	1
2	EXTRACTOR SEMICIGÜEÑAL ENCENDIDO / SEMI CRANK SHAFT EXTRACTOR		ME25950000	1
3	EXTRACTOR VOLANTE KOKUSAN / KOKUSAN FLYWHEEL EXTRACTOR		ME25634045	1
4	EXTRACTOR CARTERES / CRANKCASE EXTRACTOR		ME25950005	1
5	KIT COJINETES MOTOR /MOTOR ASSEMBLY BEARINGS	ME905001210	ME905002510	1
6	KIT RETENES MOTOR /MOTOR ASSEMBLY SEALS	ME906001210	ME906002510	1

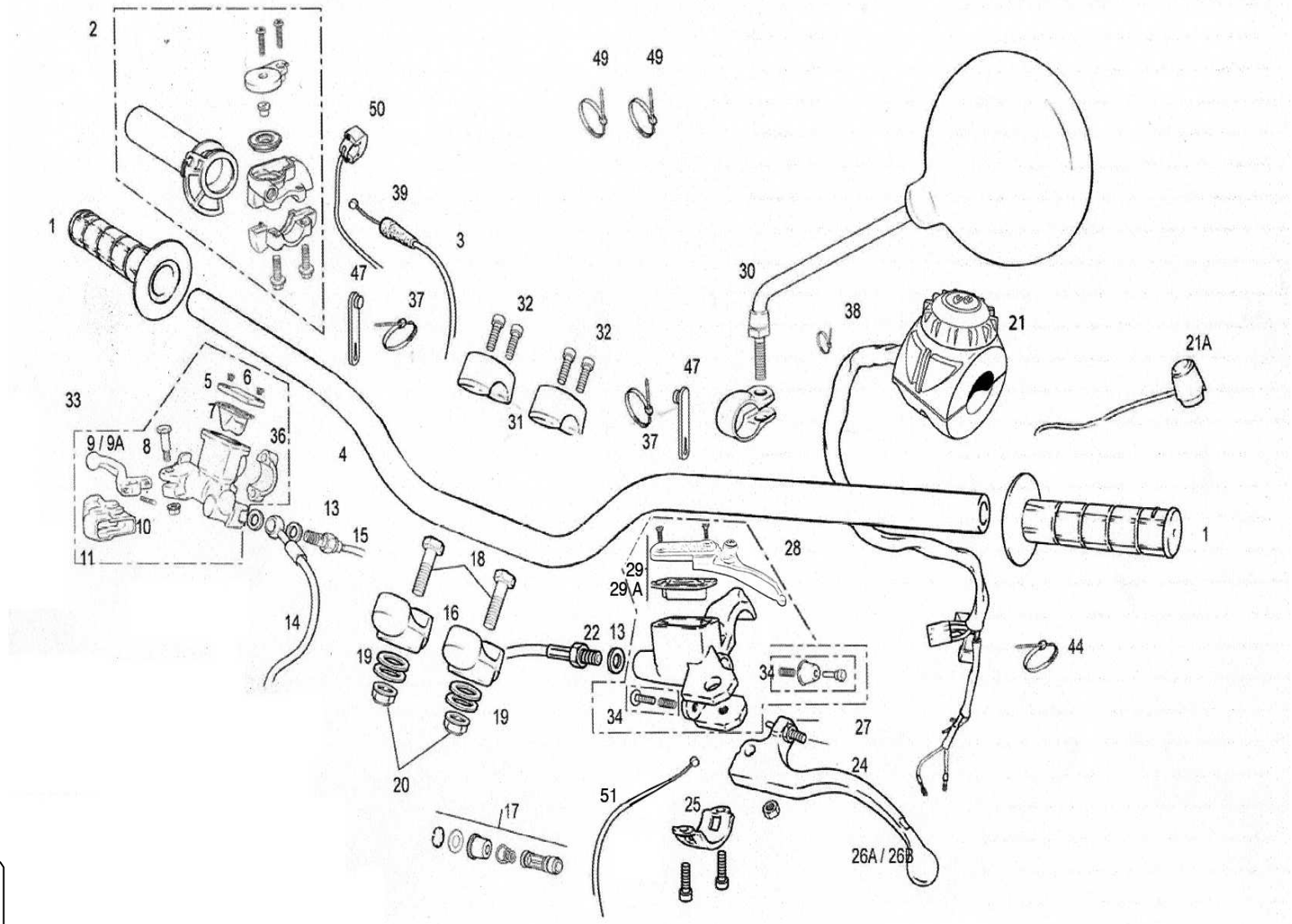
2
1
50
39
3
47
37
49
49
32
32
31
47
37
30
38
21
21A
33
5
6
7
9 / 9A
8
36
4
10
11
13
15
14
18
16
19
19
20
22
13
29
29 A
28
34
34
27
24
51
25
17
26A / 26B
44
1

Nº	DESCRIPCION / DESCRIPTION	EC	Cant.
1	JUEGO DE EMPUÑADURAS / C798HANDLEBAR GRIP (PAIR)	BE261002511	1
2	PUÑO DE GAS / TWIST GRIP	BE25724007	1
3	CABLE DE GAS / THROTTLE CABLE	BE785102509	1
4	MANILLAR COMPLETO / STEERING HANDLEBAR SET	BE250002511	1
5	TAPA BOMBA FRENO / BRAKE PUMP COVER	BC25922210	1
6	TORNILLO TAPA BOMBA / BRAKE PUMP SCREW	BC25922217	2
7	GOMA ANTIESPUMANTE / NO-FOAM RUBBER	BC25922216	1
8	TORNILLO ESPECIAL / SPECIAL SCREW	BC25922212	1
9A	MANETA FRENO TT 250 / FRONT BRAKE TT 250	BC250022045R	1
10	TENSOR MANETA BOMBA / PUMP LEVER TENSOR	BC25922218	1
11	GUARDAPOLVO / DUST COVER	BC25922213	1
13	ARANDELA LATIGUILLO 10X14X1 / HOSE WASHER 10X14X1	BE25622007	3
15	INTERRUPTOR STOP BOMBA / PUMP STOP SWITCH	BE250334003	1
16	BRIDA SUJECIÓN MANILLAR INFERIOR / HANDLEBAR CLAMP (LOWER)	BE250614013	2
17	KIT PISTÓN BOMBA FRENO “A” / “A” BRAKE PUMP PISTON KIT	BC25922219	1
18	*TORNILLO ESPECIAL 10X45 / 10X45 SPECIAL BOLT	T0201045	2
19	DISTANCIADOR BRIDA INFERIOR MANILLAR EC2003 / CLAMP HANDLEBAR SPACER	BE250314035	4
20	TUERCA CILINDRO 8.8 ESP. 10/150C13 / NUT CYLINDER M10	M01613001	2
21	CONMUTADOR LUZ / LIGHT SWITCH	EE602002508	1
22	LATIGUILLO EMBRAGUE / CLUTCH HOSE	BE250522003	1
24	TORNILLO REGULACIÓN MANETA / ADJUSTING LEVER SCREW	BT27922046	1
25	SOPORTE BOMBA EMBRAGUE / CLUTCH PUMP CLAMP	BE250022211	1
26A	MANETA EMBRAGUE CORTA / SHORT CLUTCH LEVER	BT27922040	1
26B	MANETA EMBRAGUE LARGA (SERIE) / LONG CLUTCH LEVER (STANDARD)	BE250622040	1
27	TUERCA M6 BAJA / M6 LOW NUT	T2006001	1
28	BOMBA EMBRAGUE HIDRÁULICO / HYDRAULIC CLUTCH PUMP	BE250522009	1
29	KIT TAPA BOMBA FRENO EMBRAGUE / CLUTCH BRAKE PUMP COVER KIT	BE250522210	1
29A	TAPETA BOMBA EMBRAGUE CON LEVA	BE460012508	1
30	ESPEJO RETROVISOR / REAR-VIEW MIRROR	L300760	2
31	BRIDA SUJECIÓN MANILLAR SUPERIOR / HANDLEBAR CLAMP (UPPER)	BE250614012	2
33	BOMBA FRENO DELANTERO / FRONT BRAKE PUMP SET	BC25922008	1
36	BRIDA	BC25922211	1

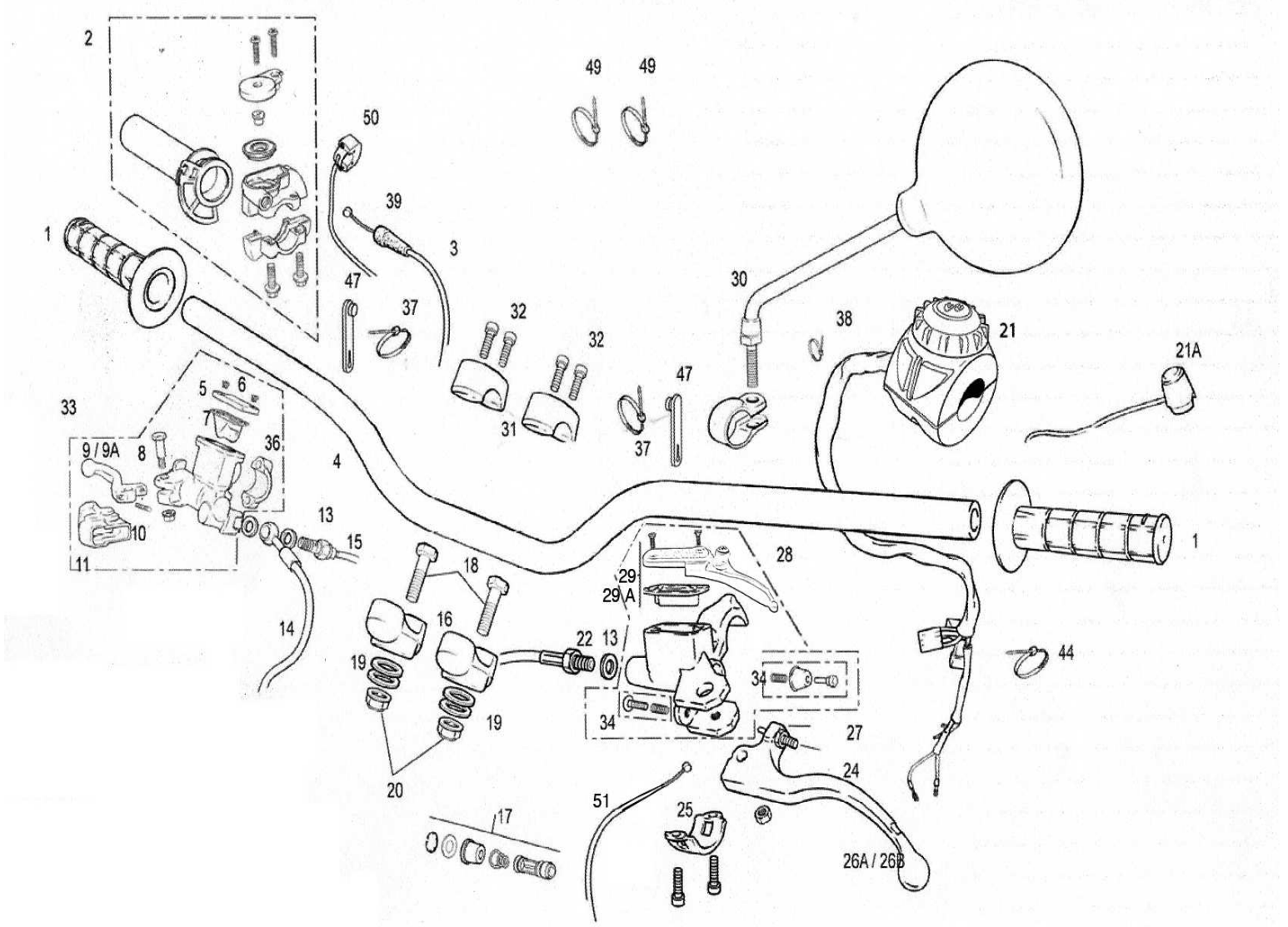
2
1
50
39
3
47
37
49
49
32
32
31
37
47
30
38
21
21A
33
5
6
7
9 / 9A
8
36
4
10
11
13
15
14
18
16
19
20
22
13
29
29 A
28
34
34
27
24
44
1
51
25
17
26A / 26B

Nº	DESCRIPCION / DESCRIPTION	EC	Cant.
32	TORNILLO SUJECIÓN BRIDA MANILLAR 8X30 / CLAMP SCREW 8X30	T0308030	4
34	KIT REPARACIÓN / REPARATION KIT	BT27722208	1
37	BRIDA GRANDE / BIG CLAMP	BE25634009	2
38	BRIDA PEQUEÑA / LITTLE CLAMP	BE25634010	1
39	GUARDAPOLVO CABLE GAS / DUST COVER THROTTLE CABLE	G600000	1
44	BRIDA UNEX CORTA 2221-0 2.5X98 / SHORT UNEX CLAMP 2221-0 2.5X98	BE25634010	1
46	PROTECTOR MANILLAR DIAMETRO VARIABLE / VARIABLE DIAMETER ANDLEBAR PROTECTOR	BE250724004	1
47	GOMA SUJECIÓN CABLEADO / CABLED RUBBER HOLDER	BFS450320067	2
48	PROTECCIÓN MANILLAR / HANDLEBAR STEERING PROTECTION	BE250624004	1
49	BRIDAS SERRETAS / CLAMP	BE25634007	2
50	INTERRUPTOR CDI / CDI SWITCH	BT280634007	1
51	CABLE STARTER /STARTER CABLE	BE256012508	1

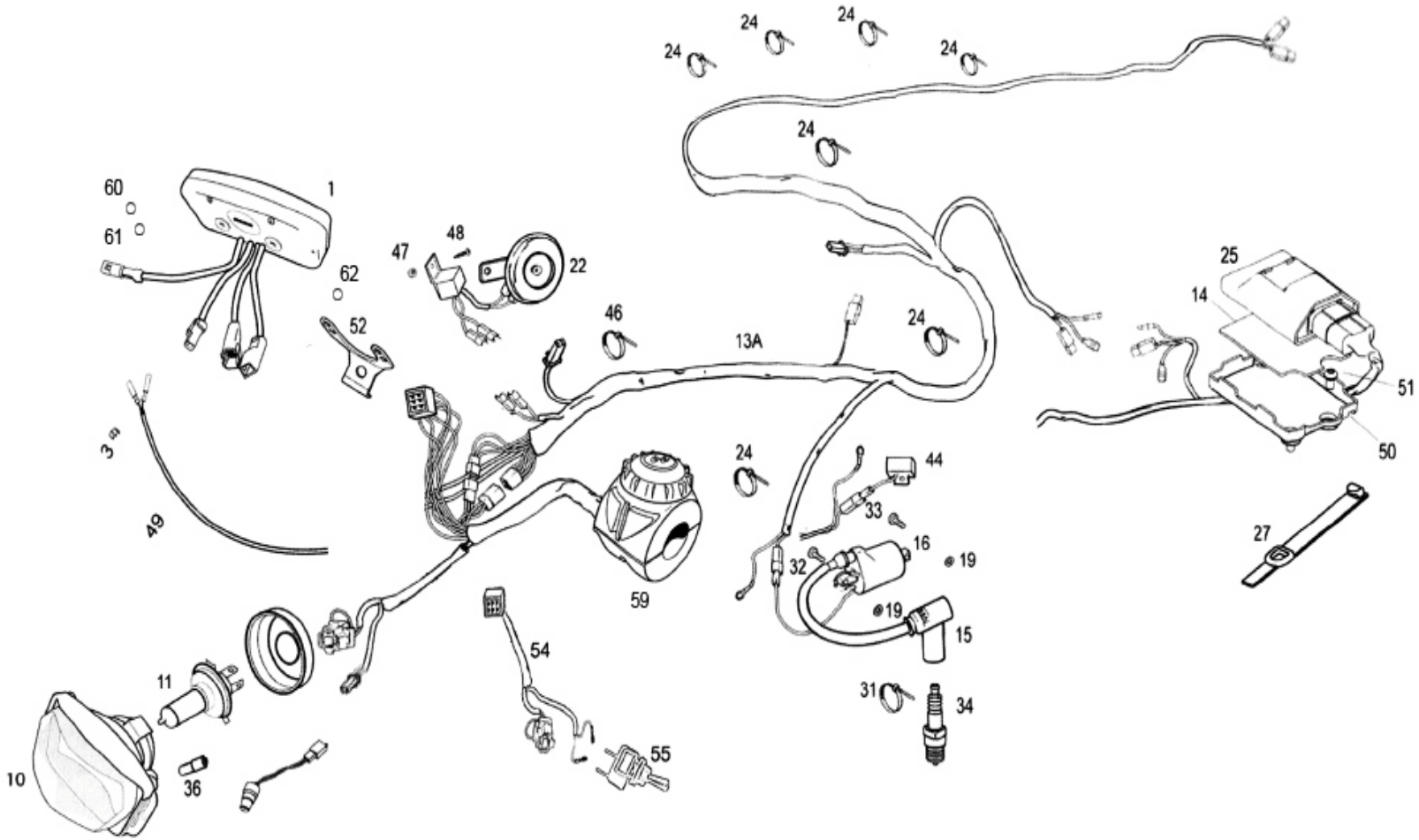
24
24
24
24
24
24
60
61
1
47
48
22
62
52
46
13A
24
25
14
51
50
3
49
24
44
33
16
19
32
19
15
27
59
54
11
31
34
55
10
36

Nº	DESCRIPCION / DESCRIPTION	125	250/300	Cant.
1	CTO. MULTIFUNCIÓN ENDURO / ENDURO MULTIFUNCTION SET		EE600002511	1
3	PASACABLES CTA. KMS. / SPEED CABLE HOSE		BE250334053	3
10	ÓPTICA HALÓGENA / HALOGEN OPTIC		EE200002511	1
11	BOMBILLA HALÓGENA HS1 12V35- 35W / HS1 12V35-35W HALOGEN BULB		L300125	1
12	INTERMITENTE IZQUIERDO DELANTERO / LEFT FRONT INDICATOR		BE250634019	1
13A	INSTALACIÓN XC SIMPLIFICADA / LIGHT INSTALLATION		EE100002510	1
14	ESPUMA PROTECTOR CDI EC 2005 / EC 2005 CDI PROTECTOR FOAM		BE250534109	1
15	PIPA BUJÍA LBMH / SPARK PLUG CAP LBMH		BE25934000	1
16	BOBINA KOKUSAN / KOKUSAN IGNITION COIL		ME250434006	1
19	CASQUILLO BOBINA / I GNITION COIL BUSHING		BT120222097	2
22	CLAXON / HORN		EE204002508	1
24	BRIDA UNEX 4,8X20 / UNEX CLAMP 4.8X20		BE25634009	9
25	CDI KOKUSAN / KOKUSAN CDI	ME120534007	ME250634007	1
27	GOMA SUJECIÓN CDI / CDI ELASTIC BAND		BE250034100	1
31	BRIDA UNEX CORTA 2221-0 2.5X98 / SHORT CLAMP 2221-0 2.5X98		BE25634010	1
32	TORNILLO ESPECIAL 6X25 VALONA 11mm / SPECIAL SCREW 6X25		T0206025	1
33	TORNILLO 6X30 / SCREW 6X30		T0506030	1
34	BUJÍA W24ESRU / PLUG W24ESRU	ME120134000	ME25934000	1
36	BOMBILLA LUZ POSICIÓN / SIDELIGHT BULB		L300126	1
37	ULS 6X16 NEGRO / 6X16 ULS BLACK BOLT		T0506016N	2
38	TUERCA CON ARANDELA M6 / NUT WITH WASHER M6		T2206000	3
44	REGULADOR / REGULATOR		L300031	1
46	BRIDA NYLON 3.6X140 / NYLON CLAMP 3,6X140		BE250022031	1
47	ULS 6X14 CON ARANDELA PLATA / 6X12 ULS WITH WASHER		T0556014	1
48	TORNILLO PHILIPS CABOTA ANCHA 6X13 / 6X13 PHILIPS SCREW		T0706013	1
49	CABLE MULTIFUNCIÓN TT 2003 / 2003 TT MULTIFUNCTION HOSE		BE250634050	1
50	SOPORTE CDI EC 2008 / EC 2008 CDI SUPPORT		BE250534107	1
51	ULS 6X10 / 6X10 ULS BOLT		T0506010	3
52	SOPORTE MULTIFUNCIÓN / MULTIFUNCTION SUPPORT		BFS450634045	1
53	ALARGO INSTALACIÓN PORTAMATRÍCULA		BE250734016	1
54	ALARGO LUCES RACING / I LENGTHEN LIGHTS ACING	EE100152509	EE100152509	1
55	INTERRUPTOR / SWITCH	BX25834001	BX25834001	1
56	ARANDELA 5 X 12 X 1 X 4		T4003012	2
57	ARANDELA GOMA X 2		EE650102508	2
58	TORNILLOS 4 X 10 ULS NEGRO		T0323010	2
59	COMMUTADOR LUCES		EE602002508	1
60	ARANDELA 4 X 12 X 1		T4004012	2
61	ULS 4 X10 NEGRO		T0554010N	2
62	ARANDELA GOMA MULTIFUNCION		EE650102508	4

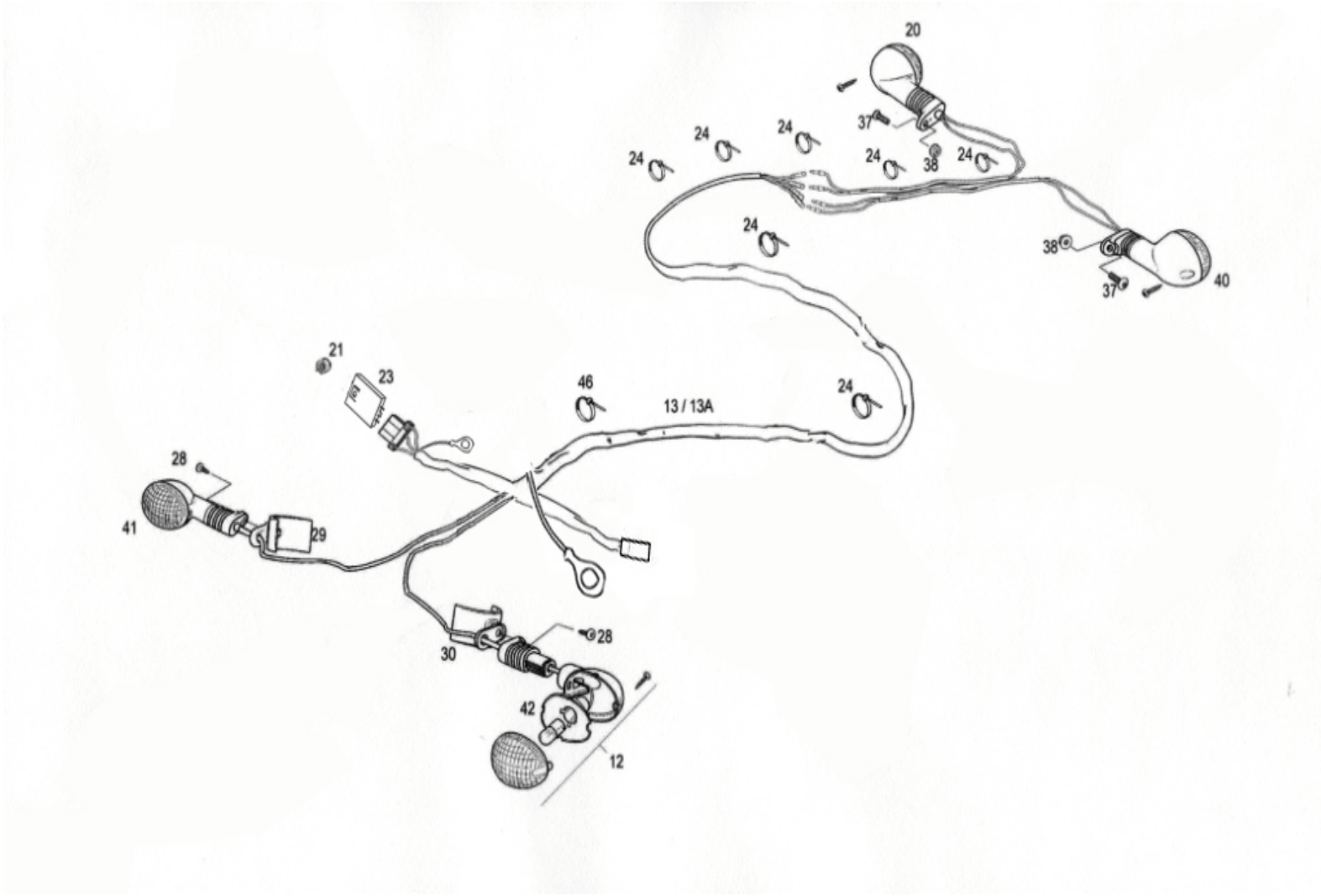
20
37
24
24
24
24
38
24
24
38
37
40
21
23
46
13 / 13A
24
28
41
29
28
30
42
12

Nº	DESCRIPCION / DESCRIPTION	125/250	Cant.
12	INTERMITENTE IZQUIERDO DELANTERO / LEFT FRONT INDICATOR	BE250634019	1
13	INSTALACIÓN INTERMITENTES / INDICATOR INSTALLATION	EE100102509	1
20	INTERMITENTE DERECHO TRASERO / RIGHT REAR INDICATOR	BE250634021	1
21	TUERCA AUTOBLOCANTE BAJA M6 / SELF-LOCKING M6 NUT	T2106001	1
23	CAJA INTERMITENCIAS / I NTERMITENT BOX	EE201752509	1
28	TORNILLO CHAPA / SPECIAL SCREW	T0706316	2
29	SOPORTE INTERMITENTE DEL. DER. / RIGHT FRONT INDICATOR HOLDER	BE250134017	1
30	SOPORTE INTERMITENTE DEL. IZDO / LEFT FRONT INDICATOR HOLDER	BE250134020	1
37	ULS 6X16 NEGRO / 6X16 ULS BLACK BOLT	T0506016N	2
38	TUERCA CON ARANDELA M6 / NUT WITH WASHER M6	T2206000	3
40	INTERMITENTE IZQUIERDO TRASERO / LEFT REAR INDICATOR	BE250634022	1
41	INTERMITENTE DERECHO DELANTERO / RIGHT FRONT INDICATOR	BE250634018	1
42	BOMBILLA / LAMP	L200118	4

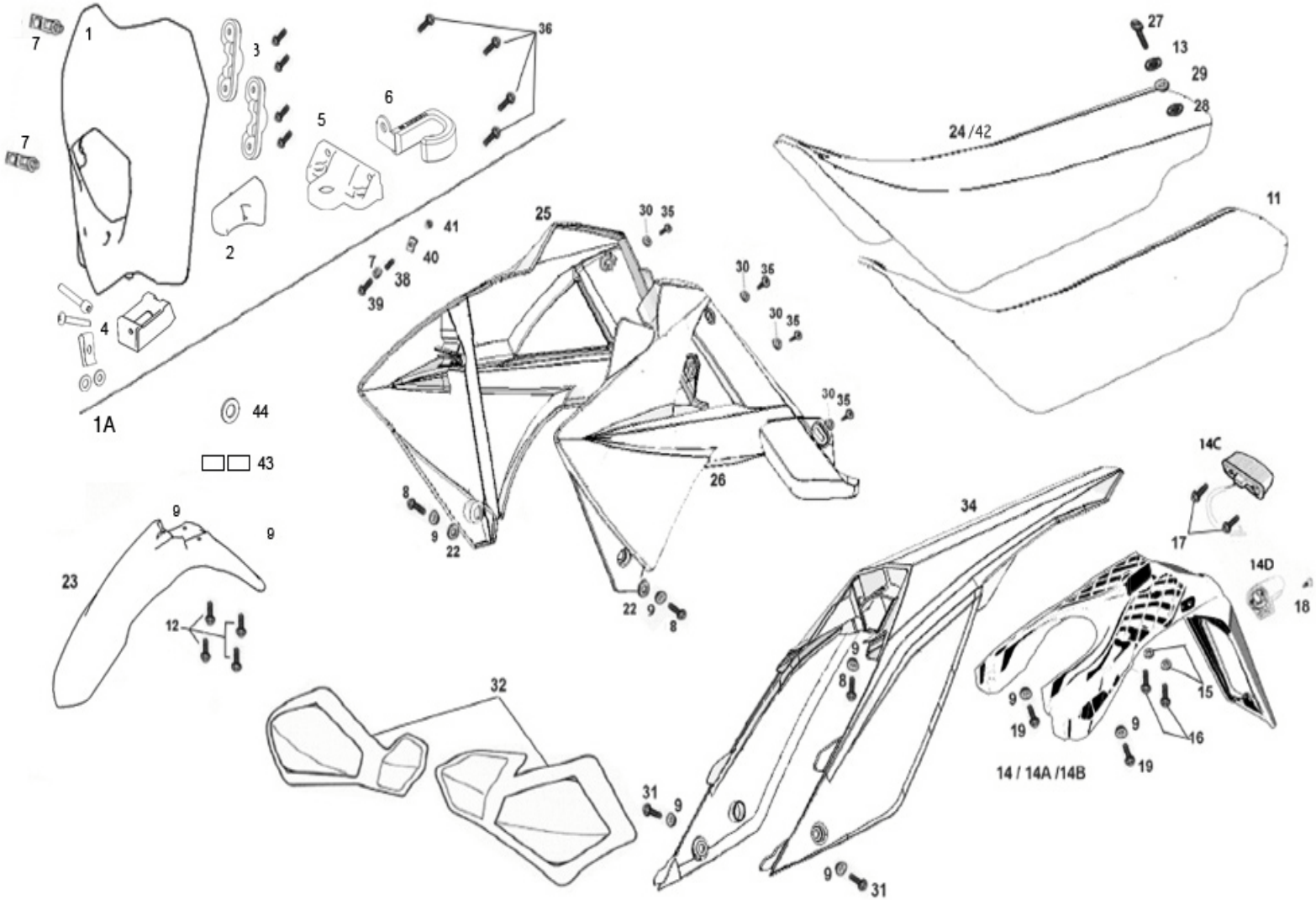
1
1A
2
3
4
5
6
7
7
9
9
11
12
13
14
14A
14B
14C
14D
15
16
17
18
19
19
22
22
23
24/42
25
26
27
28
29
30
30
30
30
31
31
32
34
35
35
35
35
36
38
39
40
41
43
44

Nº	DESCRIPCION / DESCRIPTION			EC 250	Cant.
1	PORTAFAROS DELANTERO BLANCO / FRONT WHITE HEADLAMP			BE905002511	1
1A	CTO. FARO DELANTERO BLANCO / FRONT WHITE HEADLAMP GROUP			BE90500CT2511	1
2	GUÍA LATIGUILLO SUPERIOR			BE905512511	1
3	SOPORTE FARO			BE905102511	2
4	ALARGO REGULADOR OPTICA			BE905302511	1
5	SOPORTE FARO GUARDABARROS			BE911002511	1
6	GUIA LATIGUILLO			BE215202511	1
7	GOMA SUJECCION FARO / RUBBER SECURIN HEADLAMP			BE25636015	2
9	ARAND. 4X12X1 / 4X12X1 WASHER			T4004012	1
10	TORNILLO ESPECIAL 6X14 / SPECIAL SCREW 6X14			T0206014	4
11	CASQUILLO TAPA / RADIATOR CAP COVER			BE250032060	11
12	CASQUILLO GUARDABARROS / FENDER CAP			BE250014118	4
13	TORN. ESPECIAL 6X20 / SPECIAL SCREW 6X20			T0206020	4
14	CASQUILLO SILLIN ALUMINIO ROJO / ALUMINUM SEAT RED CAP			BE940602510	1
14A	PORTA MATRICULA /TUITION SUPPORT			BE25072003	1
14B	PORTA MATRICULA COMPLETO / KIT TUITION SUPPORT			BE25072003CT	1
14C	PORTA MATRICULA COMPLETO RACING / RACING KIT TUITION SUPPORT			BE25072003USCT	1
14D	LUZ PILOTO /PILOT LIGHT			BE250734015	1
14E	LUZ MATRICULA /LIGHT ENROLLMENT			BE250734124	1
15	ARAND. 5X12X1 / WASHER			T4005012	1
16	TORNILLO ROSCA PLASTICO / PLASTIC SCREW THREAD			BE250728058	2
17	TORNILLO ROSCA CHAPA 3X9 /SCREW SHEET METAL SCREW			T1003009	2
18	UFK M5X12 / 5X12 UFK			T0315012	1
19	TORNILLO ESPECIAL 6X20 / SPECIAL SCREW 6X20			T0206020	4
20	ULS 6X16 / 6X16 ULS			T0556016	1
21	TUERCA ESTRIADA M6 / GROOVED NUT METRIC 6			T2206000	1
22	ARANDELA NYLON / NYLON WASHER			T06065017	2
23	GUARDABARROS DELANTERO NEGRO /FRONT FENDER BLACK			BE91000CT2511	1
24	FUNDA SILLIN / SEAT COVER			BE940012510	1
25	TAPA RADIADOR DRCH. NEGRA / BLACK RIGHT RADIATOR COVER			BE915002511	1
26	TAPA RADIADOR IZQ. NEGRA / BLACK LEFT RADIATOR COVER			BE92000CT2511	1
27	TORNILLO ESP. 6X30 / ESPECIAL SCREW 6X30			T0206030	1
28	ARANDELA PLSTICO /PLASTIC WASHER			BE250710213	1
29	CASQUILLO SILLIN / SEAT CAP			BE25610007	1
30	CASQUILLO TAPA RADIADOR / RADIATOR CAP COVER			BE915502510	4

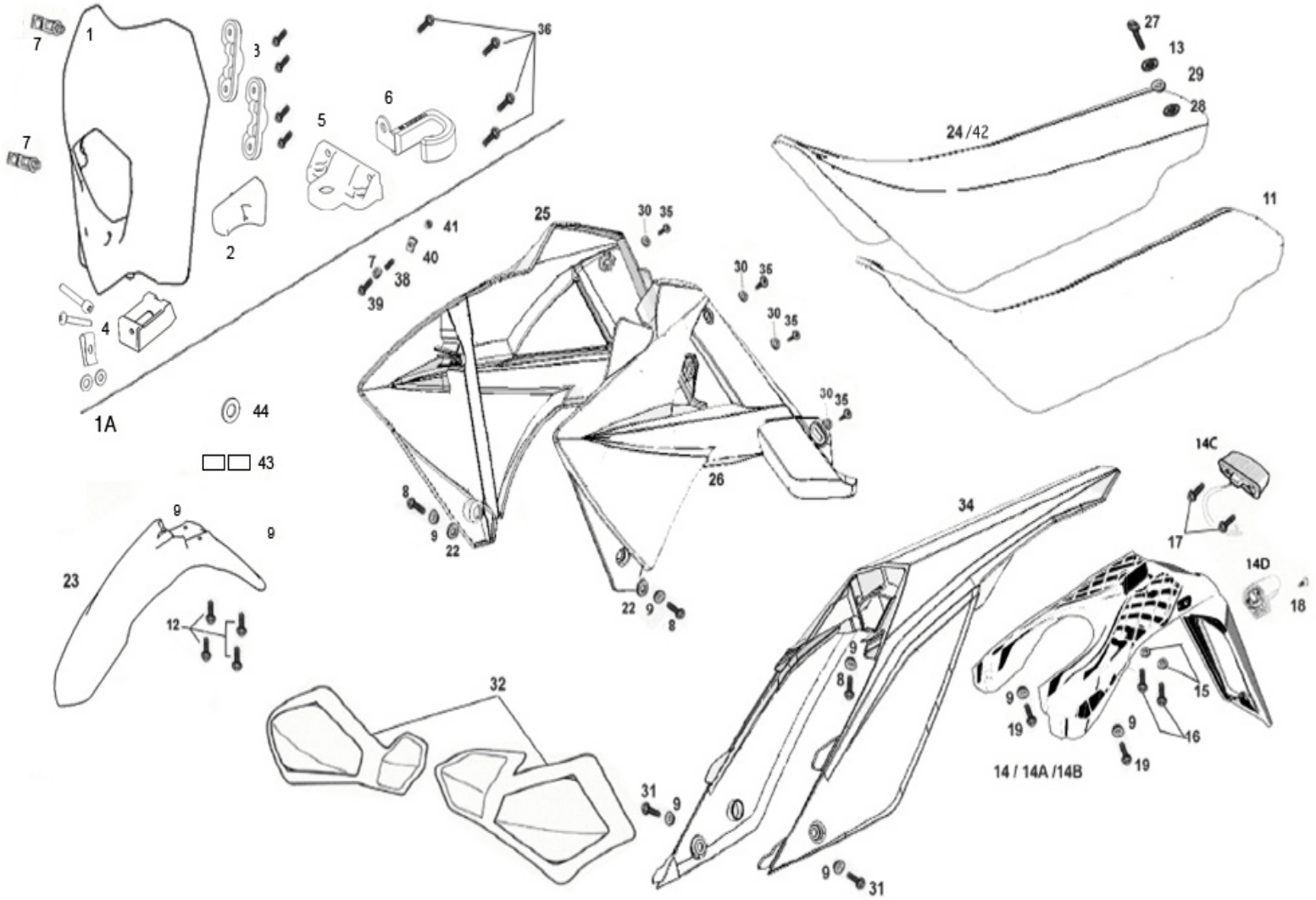
1
1A
2
3
4
5
6
7
7
9
9
11
12
13
14C
14D
14 / 14A /14B
15
16
17
18
19
19
22
22
23
24 /42
25
26
27
28
29
30
30
30
30
31
31
32
34
35
35
35
35
36
38
39
40
41
43
44

Nº	DESCRIPCION / DESCRIPTION			EC 250	Cant.
31	TORN. ESPECIAL 6X16 / SPECIAL SCREW 6X16			T0206016	2
32	CTO. PARAMANOS / SET FOR HANDS			BE945002510	1
34	GUARDABARROS TRASERO NEGRO / BLACK REAR FENDER			BE93500CT2511	1
35	TORN. ESPECIAL 5X10 / SPECIAL SCREW 5X10			T0205010	4
36	TORN. ROSCA PLASTICO / SCREW CABOTA TORK			T0804012	4
37	TORNILLO ROSCA PLASTICO 4.6X12			T0804012/2	2
38	MUELLE TORNILLO REGULADOR /SCREW SPRING REGULATOR			BX250020026	1
39	ALLEN 4X25 / 4X25 ALLEN			T0304025	1
40	GRAPA REGULACION OPTICA / REGULATING OPTICAL STAPLE			BX250020029	1
41	TUERCA AUTOBLOCANTE M4 / LOCKING NUT METRIC 4			T2104000	1
42	SILLIN / SEAT			BE940002510	1
43	TUERCA M6 ALTA / HIGH NUT METRIC 6				
44	GOMA FINAL			BE250026005	1
45	SOPORTE FARO GUARDABARROS DELANTERO			T0206014	2
46	CT FARO			BE90500CT2511	

GASGAS
EC 2011
250
300
250 4t
GAS
GAS
enduro
enduro

Nº	DESCRIPCION / DESCRIPTION			EC 250 / 300	Cant.
1	KIT ADHESIVOS (2011)			BE95000CT2511	
2A	KIT CILINDRADA 250 4T (2011)			BFS95070CT2511	
2B	KIT CILINDRADA 300 (2011)			BE95070CT3011	
2C	KIT CILINDRADA 250 (2011)			BE95070CT2511	
3	KIT ADH HORQUILLA EC 2011			BE950122511	
4	ADH. FARO DELANTERO EC-2011			BE950202511	
5	ADH.SUPERIOR FARO DELANTERO EC-2011			BE950212511	
6	ADH. BASCULANTE EC-2011			BE955002511	

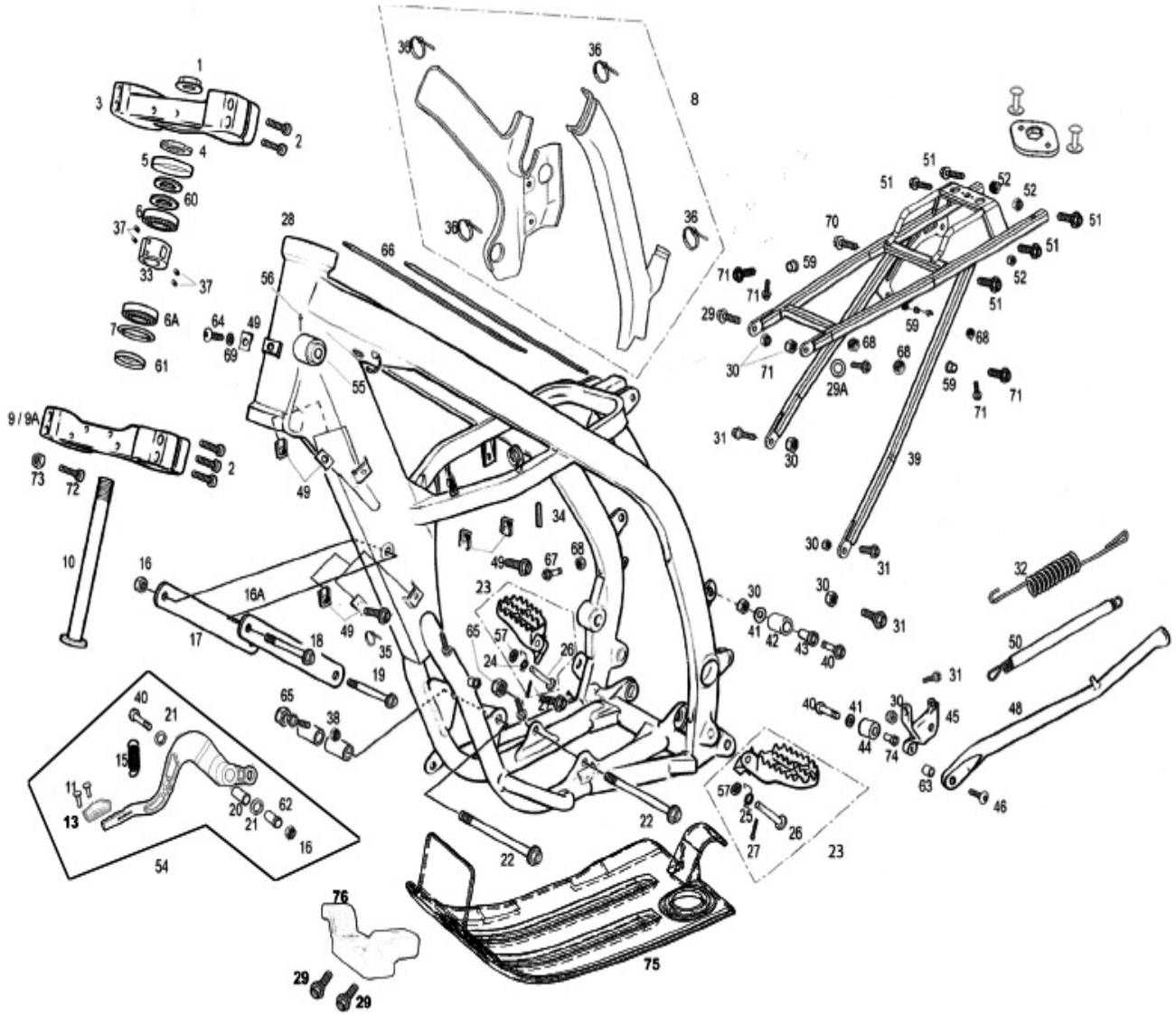
1
2
3
4
5
60
6
37
33
37
6A
7
61
64
49
69
28
56
66
55
9 / 9A
2
73
72
10
16
16A
17
18
49
35
19
65
38
40
21
15
11
13
20
21
62
16
54
36
36
36
36
8
51
52
52
51
51
51
52
70
59
71
71
29
30
71
68
68
68
29A
59
71
71
31
30
39
30
31
34
49
67
68
23
65
57
24
26
25
22
22
30
41
42
43
40
30
31
32
50
31
40
41
30
45
44
74
48
63
46
57
25
27
26
23
76
29
29
75

Nº	DESCRIPCION / DESCRIPTION	125	250/300	Cant.
1	TUERCA DIRECCIÓN / STEERING SHAFT NUT		BE25610030	1
2	ALLEN 7X30 / 7X30 ALLEN BOLT		T0307030	10
3	BRIDA SUSPENSIÓN SUPERIOR / FORK CLAMP (UPPER)		BE220002510	1
4	TUERCA DIRECCIÓN INFE. / LOWER STEERING SHAFT NUT		BE25610029	1
5	GUARDAPOLVO COJINETE DIRECCIÓN / BEARING DUST COVER		BE25610126	1
6	COJINETE DIRECCIÓN / STEERING BEARING		BE25610008	1
6A	COJINETE DIRECCIÓN / STEERING BEARING		BE250610008	1
7	TÓRICA DIRECCIÓN 50X5 / STEERING O'RING		BE25610012	1
8	CONJUNTO PROTECTOR DE CHASIS / FRAME PROTECTION SET		BE200520030CT	1
9	BRIDA SUSPENSIÓN INFERIOR / FORK CLAMP (LOWER)	BE210001210	BE210002510	1
10	EJE DIRECCIÓN / STEERING SHAFT		BE250614003	1
11	ALLEN 5X12 / 5X12 ALLEN		T0305012	2
13	PUNTERA PEDAL FRENO / BRAKE PEDAL END		BE130102510	1
15	MUELLE PEDAL FRENO / BRAKE PEDAL SPRING		BE25610023	1
16	TUERCA AUTOBLOC. ARANDELA M8 / M8 SELF-LOCKING NUT WITH WASHER		T2208002	2
16A	TUERCA CON ARANDELA M8 / M8 NUT WITH WASHER	T2208002		1
17	TIRANTE CULATA / CYLINDER HEAD BRACE	BE25910050	BE25910050	2
18	TORNILLO ESPECIAL 8X65 FIL.20 8.8 / 8X65 SPECIAL SCREW	T0208065	T0208065	2
19	TORNILLO ESPECIAL 8X70 FIL.20 / 8X70 SPECIAL SCREW		T0208070	1
20	GLACIER PEDAL FRENO / BRAKE PEDAL BEARING		BE250010009	1
21	TÓRICA PEDAL ARRANQUE D 11X2 / 11X2 KICKSTART O'RING		ME250036063	2
22	TORNILLO MOTOR 10X118 / 10X 118 ENGINE BOLT		T0210118	2
23	KIT ESTRIBOS / FOOTREST SET		BE14000CT2509	1
24	MUELLE ESTRIBO DERECHO / RIGHT FOOTREST SPRING		BE25610037	1
25	MUELLE ESTRIBO IZQUIERDO / LEFT FOOTREST SPRING		BE25610038	1
26	CASQUILLO ESTRIBO / FOOTREST BUSHING		BE25610006	2
27	CLAVILLA ZINC 3X35 / 3X35 ZINC PIN		BE25622022	2
28	CHASIS ENDURO / ENDURO FRAME	BE100001210	BE100002511	1
29	TORNILLO ESPECIAL 8X20 / 8X20 SPECIAL SCREW		T0508020	4

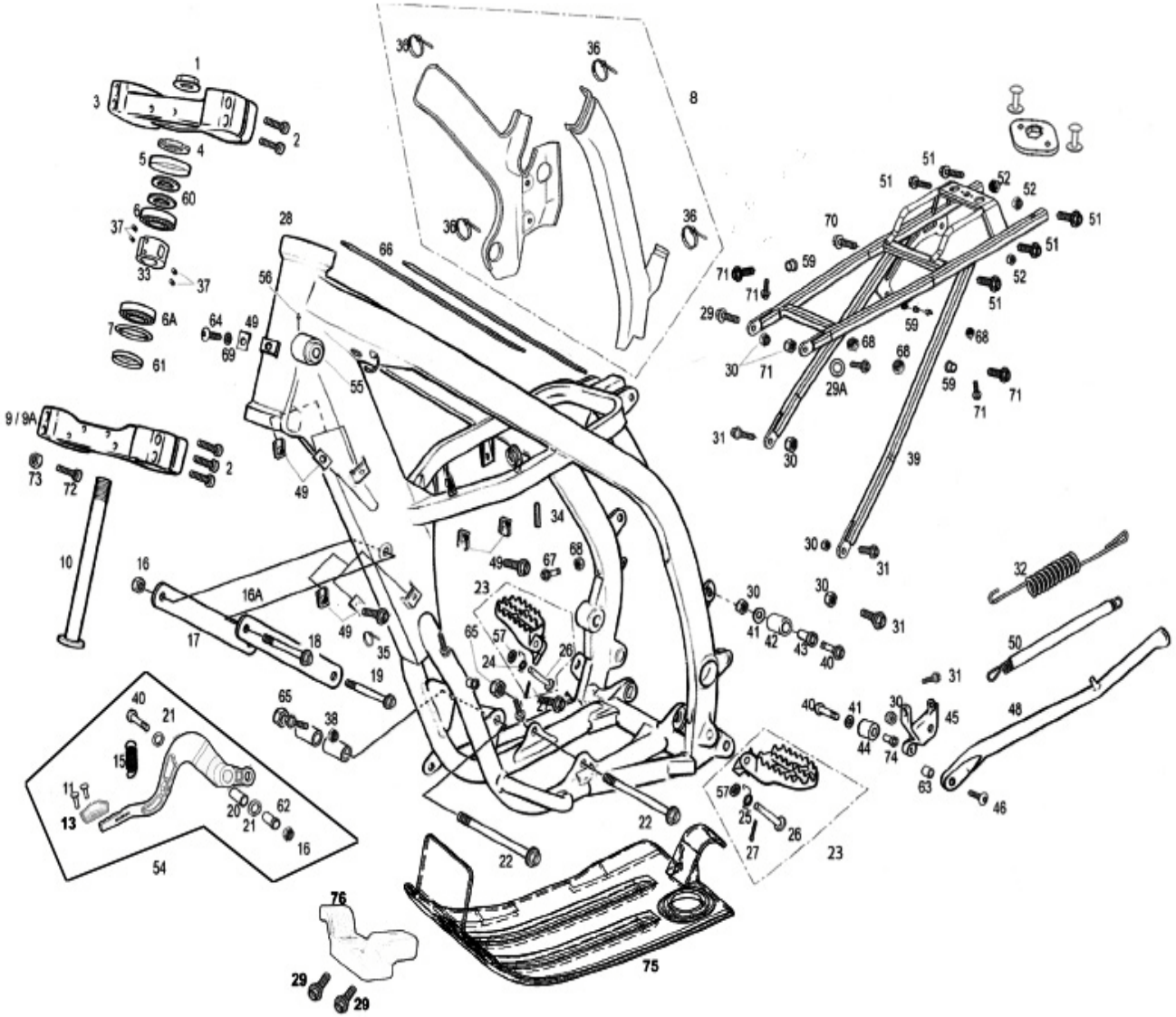
1
2
3
4
5
60
6
37
33
37
6A
7
61
64
69
49
28
56
66
55
9 / 9A
73
72
2
10
16
16A
17
18
49
35
19
65
38
40
21
15
11
13
20
21
62
16
54
36
36
36
36
8
51
52
52
51
51
51
52
51
70
59
71
71
29
30
71
68
68
68
29A
59
59
71
71
31
30
39
30
31
34
49
67
68
23
65
57
24
26
25
22
22
30
41
42
43
40
30
31
31
32
50
40
41
44
74
30
45
48
63
46
57
25
27
26
23
76
29
29
75

Nº	DESCRIPCION / DESCRIPTION	250/300	Cant.
30	TUERCA AUTOBLOCANTE M8 BAJA / LOW M8 SELF-LOCKING NUT	T2108001	6
31	TORNILLO ESPECIAL 8X20 / SPECIAL SCREW 8X20	T0208020	3
32	MUELLE EXTERIOR CAVALLETE / SUPPORT OUTER SPRING	BE250510039	1
33	CASQUILLO ANTIRROBO EJE DIRECCIÓN / STEERING AXLE ANTI-THEFT BUSHING	BE242002510	1
34	FUNDA CLIP 1X70 CHASIS / CHASSIS CLIP SLEEVE 1X70	BE250411000	6
35	BRIDA UNEX 2274 4.8X20 / 2274 UNEX CLAMP 4.8X20	BE25634009	1
36	BRIDA UNEX 2274 4.8X36 / 2274 UNEX CLAMP 4.8X36	BE25634007	4

Nº	DESCRIPCION / DESCRIPTION	125	250/300	Cant.
37	TORNILLO PRISIONERO M6X8 / SET SCREW M6X8	-	BE250310073	4
38	CASQUILLO CROSS 125 / CROSS 125 BUSHING	BE120110065	-	2
39	COLA CHASIS / FRAME TAIL		BE250710001	1
40	TORNILLO ESPECIAL 8X45 / 8X45 SPECIAL SCREW		T0208045	3
41	ARANDELA 8X20X1,5 / 8X20X1.5 WASHER		T4008020	2
42	RODILLO GUIA CAD. SUP. / UPPER CHAIN ROLL		BE25610014	1
43	CASQUILLO ROD. 6,25X12X25 / 6.25X12X25 BUSHING		BE250712016	1
44	RODILLO GUIA CADENA 13,5X32X23,5 / LOWER CHAIN ROLL		BE25610032	1
45	SOPORTE CABALLETE / SIDE STAND HOLDER		BE250212023	1
46	ULS 8X30 / 8X30 ULS BOLT		T0508030	1
48	CABALLETE EC2005 / EC2005 SIDE STAND BRACKET		BE142002510	1
49	TUERCA ENJAULADA / CAGED NUT		T2606000	8
50	MUELLE CABALLETE / SIDE STAND BRACKET SPRING		BE250410039	1
51	TORNILLO ESPECIAL 6X25 / 6X25 SPECIAL SCREW		T0206025	4
52	TUERCA AUTOBLOCANTE M6 ALTA / M6 SELF-LOCKING NUT HIGH		T2106002	2
54	CTO. PEDAL FRENO / BRAKE PEDAL SET		BE13000CT2510	1
56	CTO. ANTIRROBO / STEERING LOCK		BT280210075	1
57	ARANDELA 10.5x19X2 / 10.5x19X2 WASHER		T4001019	2
59	TUERCA REMACHABLE / RIVETABLE NUT		BE250010070	4
60	ARANDELA DIRECCIÓN / STEERING WASHER		BE25610028	2
61	CAZOLETA DIRECCIÓN / STEERING CAP		BE250610026	1
62	CASQUILLO SOPORTE PEDAL FRENO EC250 / BRAKE PEDAL SUP. BUSHING		BE250210916	1
63	CASQUILLO CABALLETE EC2001 / SIDE STAND HOLDER BUSHING		BE250112011	1
64	TORNILLO ULS 6X16 / 6X16 ULS		T0506016	1
65	TUERCA AUTOBLOCANTE M10 PASO 1.25 PLATA / M10 SELF-LOCKING NUT		T3110002	2

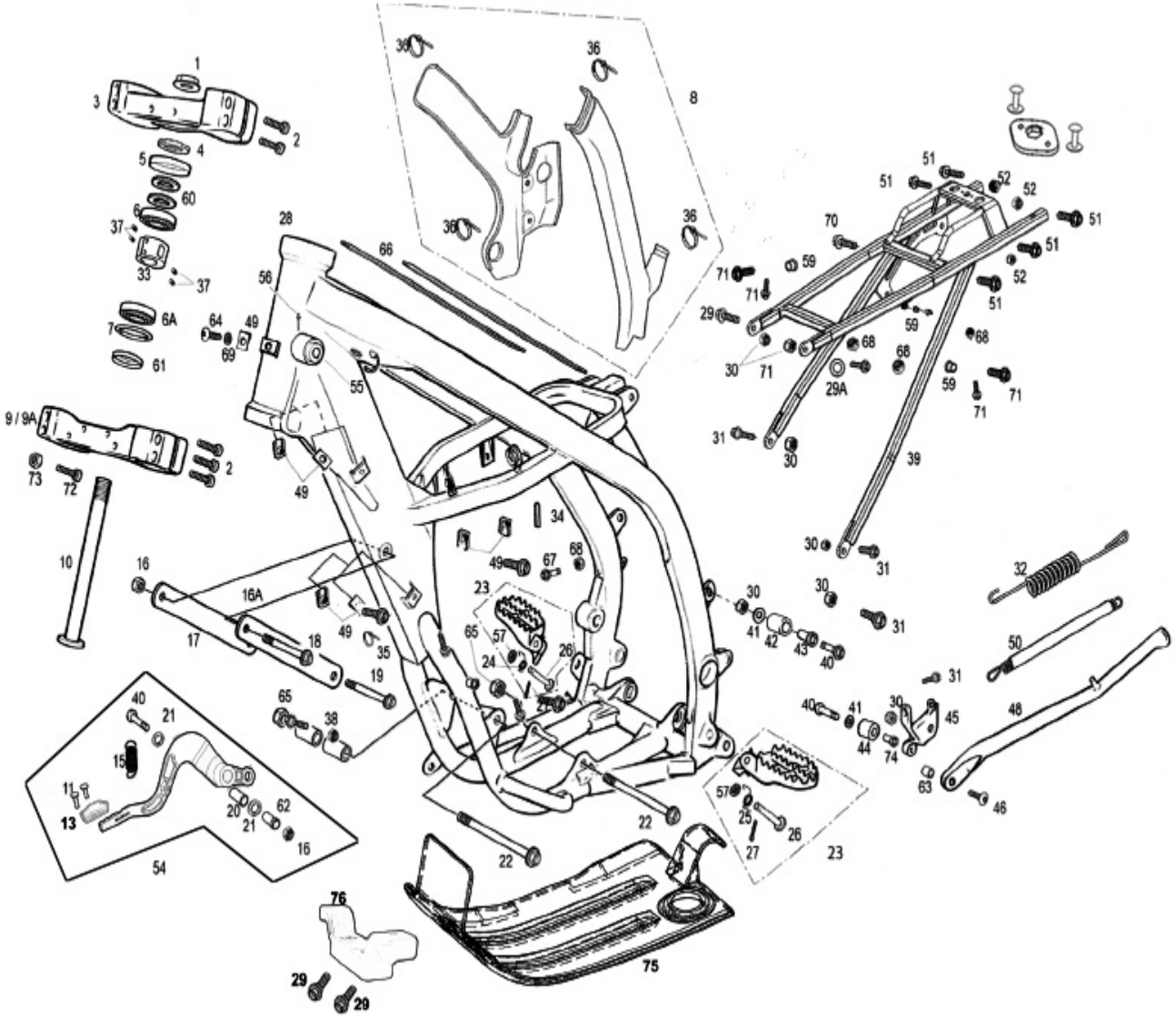
1
2
3
4
5
60
6
37
33
37
6A
7
61
64
49
69
28
56
66
55
9 / 9A
2
73
72
10
16
16A
17
18
49
35
19
65
38
40
21
15
11
13
20
21
62
16
54
36
36
36
36
8
51
52
52
51
51
51
52
51
70
71
71
59
29
30
71
68
68
68
29A
59
68
59
71
71
31
30
39
34
49
67
68
23
65
57
24
26
27
22
22
30
41
42
43
40
30
31
30
31
31
32
50
40
41
44
74
30
45
48
63
46
57
25
27
26
23
76
29
29
75

Nº	DESCRIPCION / DESCRIPTION	125	250/300	Cant.
66	TIRA ADHESIVA DEPÓSITO / FUEL TANK BAND STICKER		BE25638018	2
69	ARANDELA PLANA 6X12X1.5 / 6X12X1.5 WASHER		T4006012	1
70	ULS 6X25 CON ARANDELA ZINCADO / ULS 6X25 WITH ZINC WASHER	T0556025		1
71	TORNILLO ESPECIAL 6X20 / 6X20 SPECIAL SCREW	T0606020		5
72	ALLEN 8X20 / 8X20 ALLEN BOLT	T0308020		2
73	TUERCA TOPE DIRECCIÓN M8X13X8 ZINCADO / ZINC STEERING STOPNUT M8X13X8	T2008002		2
74	CASQUILLO RODILLO 12,5X36X16		BE25612016	1
75	PROTECTOR CARTER		BE115002510	1
76	FIJACION PROTECTOR CARTER		BE115102510	1
77	PLATINA SUBCHASIS		BE2507100113	1
78	TUERCA AUTOBLOCANTE M-6		T2206002	1
79	REMACHE S X 10 ALUMINIO		T4003280	2

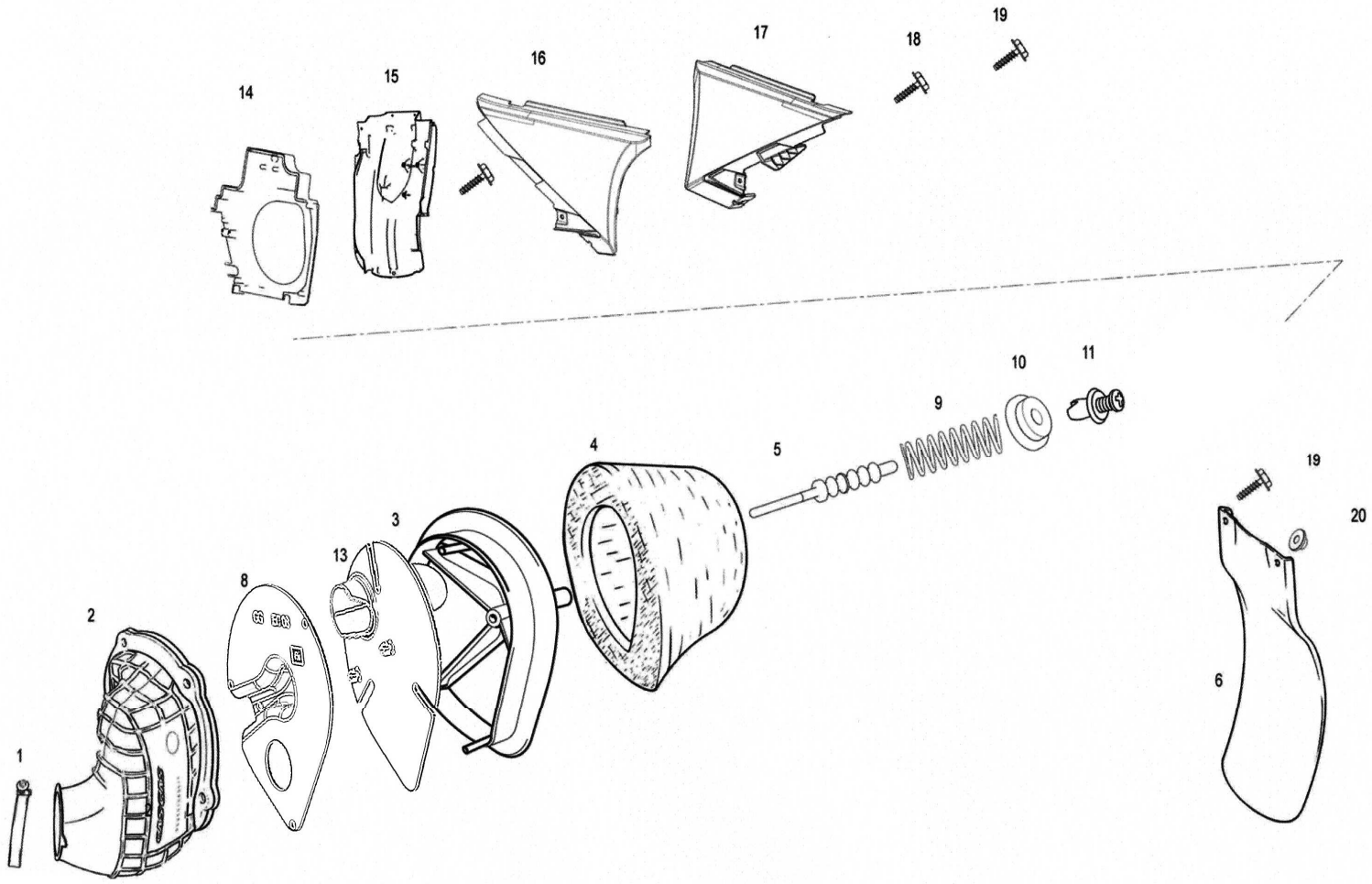
14
15
16
17
18
19
10
11
9
4
5
19
20
3
13
8
2
6
1

Nº	DESCRIPCION / DESCRIPTION	125/250/300	Cant.
1	ABRAZADERA 50-70/9 / CLAMP	BE250328033	1
2	GOMA TUBERA CAJA FILTRO / AIR FILTER BOX RUBBER	BE250128017/2	1
3	JAULA FILTRO AIRE / AIR FILTER CARRIER	BE250628002	1
4	FILTRO AIRE / AIR FILTER	BE250728000	1
5	VARILLA PALOMA FILTRO / FILTER BOLT	BE250728003	1
6	PROTECTOR SUSPENSIÓN TRASERA / REAR SHOCK ABSORBER PROTECTOR	BE25620008	1
7	TORNILLO ESPECIAL 6X20 / 6X20 SPECIAL SCREW	T0606020	2
8	RESTRICTOR AIRE DEL. CAJA FILTRO / FILTER BOX AIR RESTRICTOR	BE798002508	1
9	MUELLE VARILLA CAJA FILTRO	BE250728051	1
10	ARANDELA NYLON TOPE MUELLE CAJA FILTRO	BE250728052	2
11	CLIP-TORNILLO (1021)	MFS400580013	2
13	RESTRICTOR AIRE TRAS.. CAJA FILTRO / FILTER BOX AIR RESTRICTOR	BE798052509	1
14	TAPA CAJA FILTRO DEL.	BE250728054	1
15	TAPA CAJA FILTRO TRAS.	BE790902510	1
16	TAPA CAJA FILTRO DRCHA.	BE926002509	1
17	TAPA CAJA FILTRO IZQ.	BE931002509	1
18	TORN. ROSCA PLASTICO	BE250420063	4
19	TORN. ROSCA PLASTICO PROTECTOR AMORTIGUADOR	BE250728058	2
20	CASQUILLO PROTECTOR AMORTIGUADOR	BE250728059	2

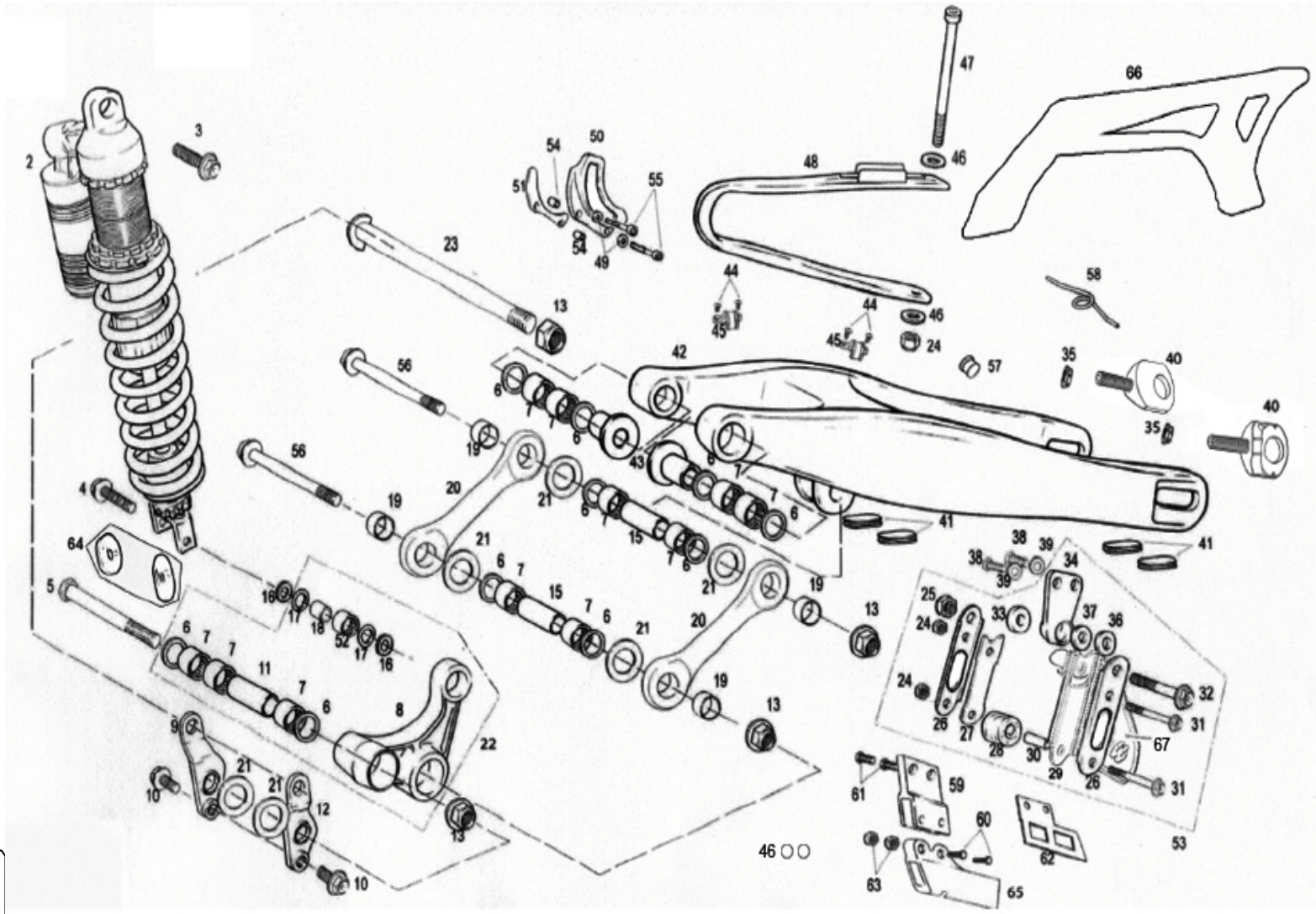
2
3
4
5
64
54
50
51
55
49
23
13
56
19
20
21
6
7
15
16
17
18
52
11
8
22
9
10
12
44
45
46
24
42
43
41
47
48
66
58
57
35
40
38
39
34
25
33
37
36
32
31
67
26
27
28
30
29
61
59
60
62
53
63
65

Nº	DESCRIPCION / DESCRIPTION		125	250/300	Cant.
2	AMORTIGUADOR TRASERO / REAR SHOCK ABSORBER		BE300001209	BE300002509	1
3	TORNILLO ESPECIAL M10X55 / SPECIAL SCREW M10X55			T0210055	1
4	TORNILLO M10X40X1,25 / BOLT M10X40X1.25			T0110042	1
5	TORNILLO ESPECIAL 14X110 / SPECIAL SCREW 14X110			T0214110	1
6	TÓRICA 3.5X21 / 3.5X21 O'RING			BE250510011	10
7	JAULA AGUJAS 22BM2816 / 22BM2816 NEEDLES BEARING			BE25614010	11
8	BALANCÍN / ROCKER ARM			BE25614005	1
9	SOPORTE BALANCÍN DERECHO / RIGHT ROCKER ARM SUPPORT			BE250314006	1
10	TORNILLO ESPECIAL 12X25X1,25 / SPECIAL SCREW 12X25X1.25			T02012025	2
11	CASQUILLO 14X22X62,5 / BUSHING 14X22X62.5			BE25612005	1
12	SOPORTE BALANCÍN IZQUIERDO / LEFT ROCKER ARM SUPPORT			BE250314007	1
13	TUERCA BASCULANTE TT / NUT			BE25612009	4
15	CASQUILLO 14X22X57 / BUSHING 14X22X57			BE25612014	2
16	ARANDELA REGLAJE 21X10,2X1 / SETTING WASHER 21X10.2X1			T4001022	2
17	TÓRICA BIELETA 15X3,5 / CONNECTING ROD O'RING			BE25814015	2
18	CASQUILLO INFERIOR AMORTIG. D.16X21X10 / SHOCK ABSORBER BUSHING (LOWER)			BE25642005	1
19	CASQUILLO BIELETA / CONNECTING ROD BUSHING			BE25642002	4
20	BIELETA / CONNECTING ROD 123		BE120114008	BC250014008	2
20A	BIELETA SM 125 / CONNECTING ROD 122		BC250014008	-	2
20B	BIELETA 129 ENDURO			BEH34001209	2
21	ARANDELA 22,4X36X0,7 REGLAJE / SETTING WASHER 22.4X36X0.7			T4022036	6
22	BALANCÍN EC COMPLETO / EC ROCKER ARM SET			BE250514005CT	1
23	EJE BASCULANTE / SWINGARM SHAFT			BE250312008	1
24	TUERCA AUTOBLOCANTE M6 ALTA / HIGH SELF LOCKING NUT M6			T2106002	1
25	TUERCA AUTOBLOCANTE M8 BAJA / LOW SELF LOCKING NUT M8			T2108001	1
26	PLATINA GUÍA CADENA / CHAIN GUIDE BRACKET			BE25912017	2
27	TIRA NYLON ANTIRUIDO / ANTI-NOISE NYLON BAND			BE25612022	1
28	RODILLO GUÍA CADENA 13,55X32X23,5 / CHAIN GUIDE ROLLER 13.55X32X23.5			BE25610032	1
29	PROTECTOR CADENA /CHAIN PROTECTOR			BE450202509	1
30	CASQUILLO GUIA CADENA / CHAIN GUIDE BUSHING			BE25610025	1
31	TORNILLO ESPECIAL 6X45 / SPECIAL SCREW 6X45			T0206045	2
32	TORNILLO ESPECIAL 8X45 / SPECIAL SCREW 8X45			T0208045	1
33	DISTANCIADOR SOP. GUIA CADENA GRANDE / BIG CHAIN GUIDE SUPPORT SPACER			BE25612021	1

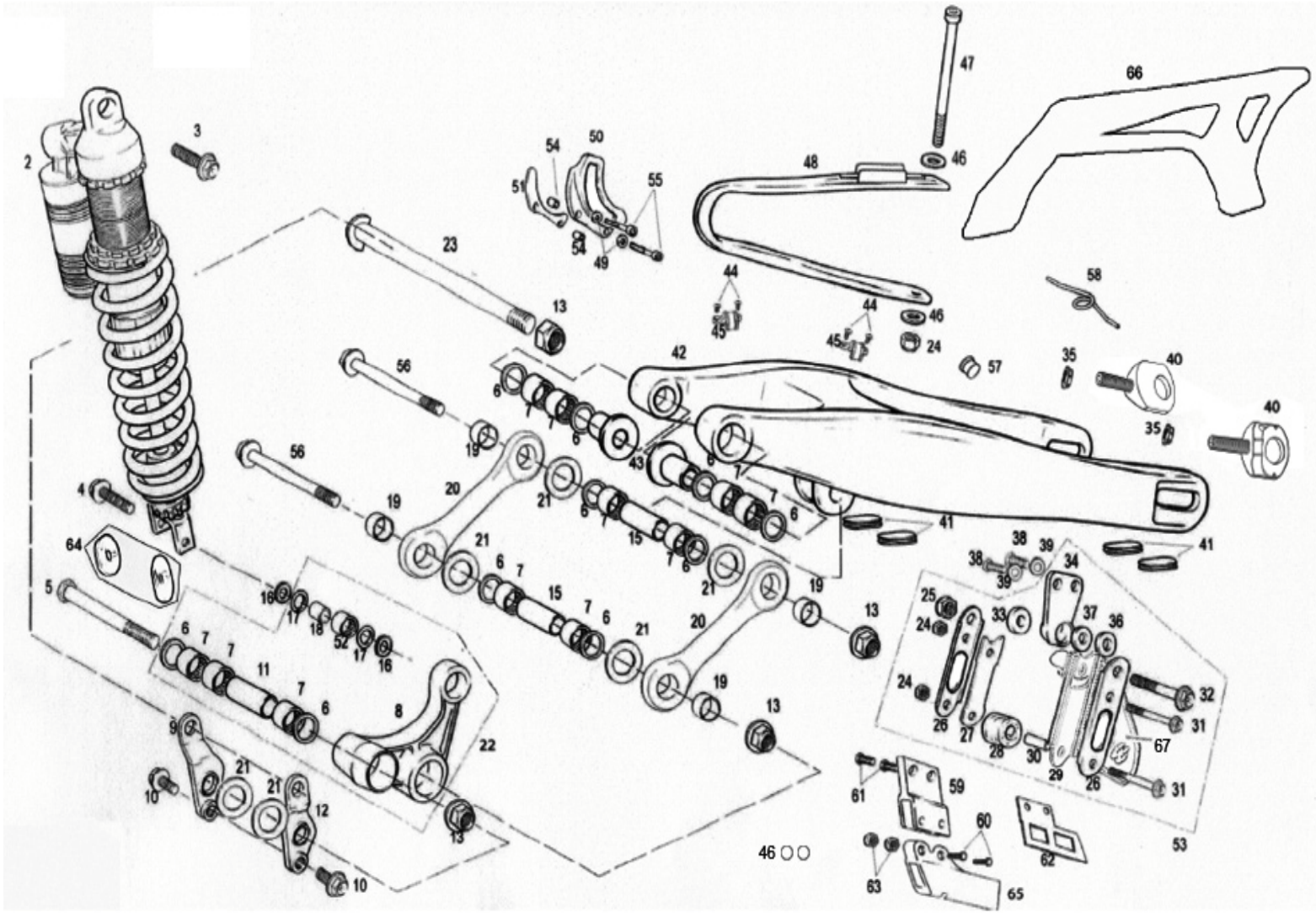
2
3
4
5
64
9
10
12
8
22
11
7
6
16
17
18
52
19
20
21
56
23
13
15
42
43
41
44
45
46
24
47
48
66
54
50
51
55
49
58
57
35
40
38
39
34
37
36
33
25
26
27
28
30
29
32
31
67
61
59
60
62
63
65
53

Nº	DESCRIPCION / DESCRIPTION	250/300	Cant.
34	SOPORTE GUÍA CADENA / CHAIN GUIDE SUPPORT	BE25612018	1
35	TUERCA CILINDRO 8.8 ESP 10/150 C3 / CYLINDER NUT 8.8 ESP 10/150 C3	ME25616031	2
Nº	**DESCRIPCION / DESCRIPTION**	**125/250/300**	**Cant.**
36	DISTANCIADOR SOPORTE GUIA CADENA PEQ. / SMALL CHAIN GUIDE SUPPORT SPACER	BE25612020	1
37	SILENTBLOCK SOPORTE GUIA CADENA / CHAIN GUIDE SUPPORT SILENTBLOCK	BE25612019	1
38	HEXAGONAL 8X20 / HEX. BOLT 8X20	T0108020	2
39	ARANDELA 8X16X1,5 / WASHER 8X16X1.5	T4008016	2
40	TENSOR RUEDA / WHEEL TENSOR	BE250418022	2
41	GOMA PROTECTOR BASCULANTE / SWINGARM PROTECTOR RUBBER	BE25836005	4
42	BASCULANTE / SWINGARM	BE250612002RC	1
43	CASQUILLO BASCULANTE / SWINGARM BUSHING	BE250312007	2
44	ULS 5X12 / ULS BOLT 5X12	T0505012	4
45	SUJECIÓN LATIGUILLO SOBRE BASCULANTE / SWINGARM HOSE HOLDER	BE25612006	2
46	ARANDELA 6X18X1,5 / WASHER 6X18X1.5	T4006018	4
47	ALLEN 6X100 / 6X100 ALLEN BOLT	T03060100	1
48	PATÍN CADENA / CHAIN SLIDER	BE420502508	1
49	ARANDELA PLANA 6X12X1,5 / PLAIN WASHER 6X12X1.5	T4006012	2
50	PROTECCIÓN PIÑON PLÁSTICO ENDURO / ENDURO PLASTIC PINION PROTECTION	BE486002508	1
51	PLATINA PROTECTOR PIÑÓN / PINION PROTECTOR BRACKET	ME25636021	1
52	JAULA AGUJAS AL1216 / AL 1216 NEEDLES BEARING	BE25614009	1
53	CTO. TENSOR CADENA / CHAIN TIGHTER SET	BE42000CT2509	1
54	CASQUILLO DISTANCIADOR PIÑÓN / SPACER PINION BUSHING	ME250036019	2
55	ALLEN 6X45 / 6X45 ALLEN BOLT	T0306045	2
56	TORNILLO ESPECIAL M14X95 / M14X95 SPECIAL SCREW	T0201495	2
57	TAPÓN BASCULANTE BLANCO / WHITE SWINGARM CAP	BE250436001	4
58	MUELLE TENSOR RUEDA TRAS.	BE250718122	1
64	CTO. ESCENTRICA AMORTIGUADOR / CUSHIONING ASSEMBLY ESCENTRIC		1

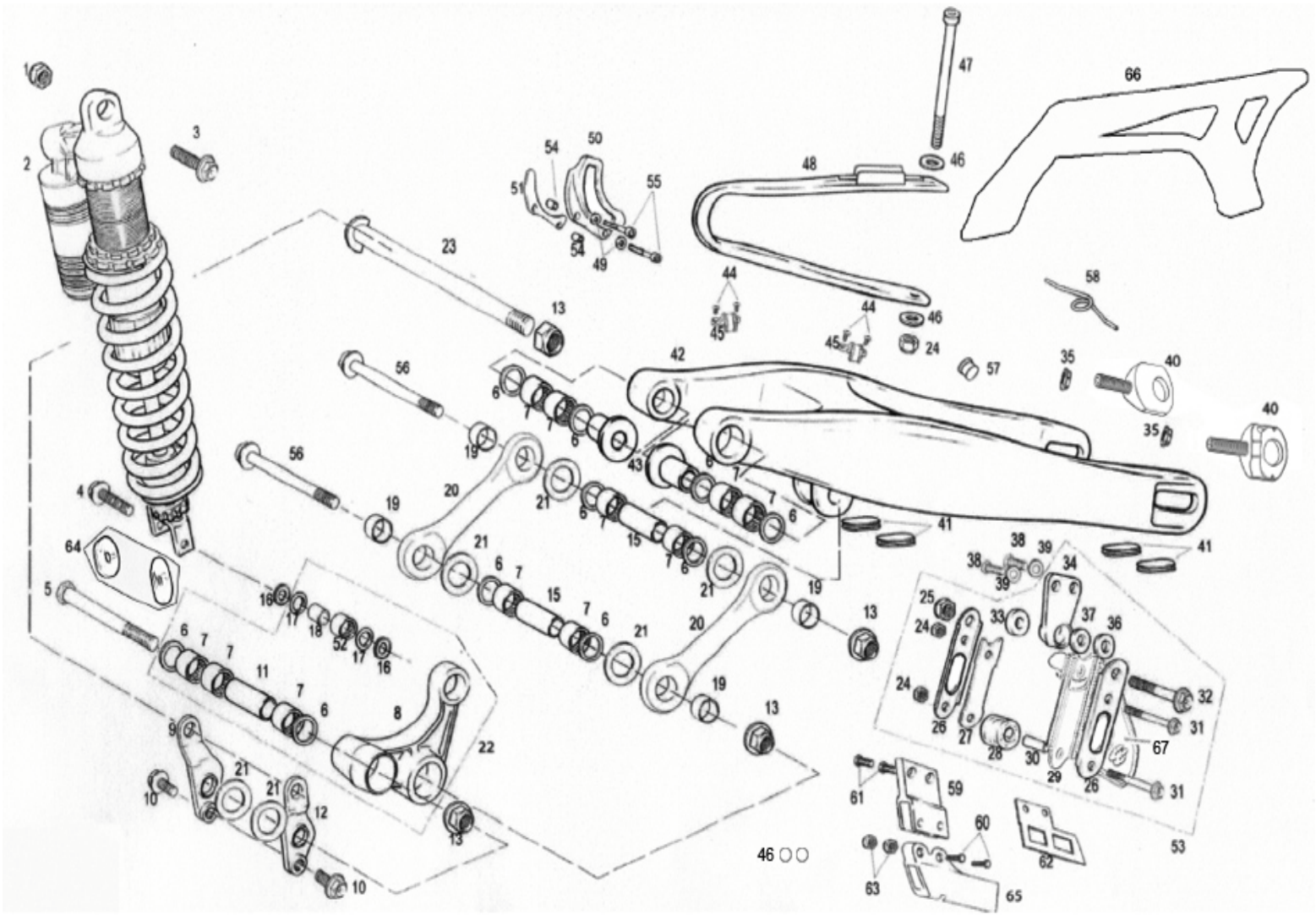
1
2
3
4
5
6
7
8
9
10
11
12
13
15
16
17
18
19
20
21
22
23
24
25
26
27
28
29
30
31
32
33
34
35
36
37
38
39
40
41
42
43
44
45
46
47
48
49
50
51
52
53
54
55
56
57
58
59
60
61
62
63
64
65
66
67

Nº	DESCRIPCION / DESCRIPTION		250	Cant.
61	ALLEN 8X20 / 8X20 ALLEN		T0308020	2
62	PLACA REFUERZO GUIA CADENA CROSS 2004 / 2004 CROSS CHAIN GUIDE STRAIN PLATE		BC250412032	1
63	TUERCA M6 CON ARANDELA / M6 NUT WITH WASHER		T2206002	2
65	GUIA CADENA / CHAIN GUIDE		BE420002511	1
66	PROTECTOR BASCULANTE /PROTECTIVE TILT		BE250328011	1
67	PROTECTOR GUIA CADENA		BE450202509	1

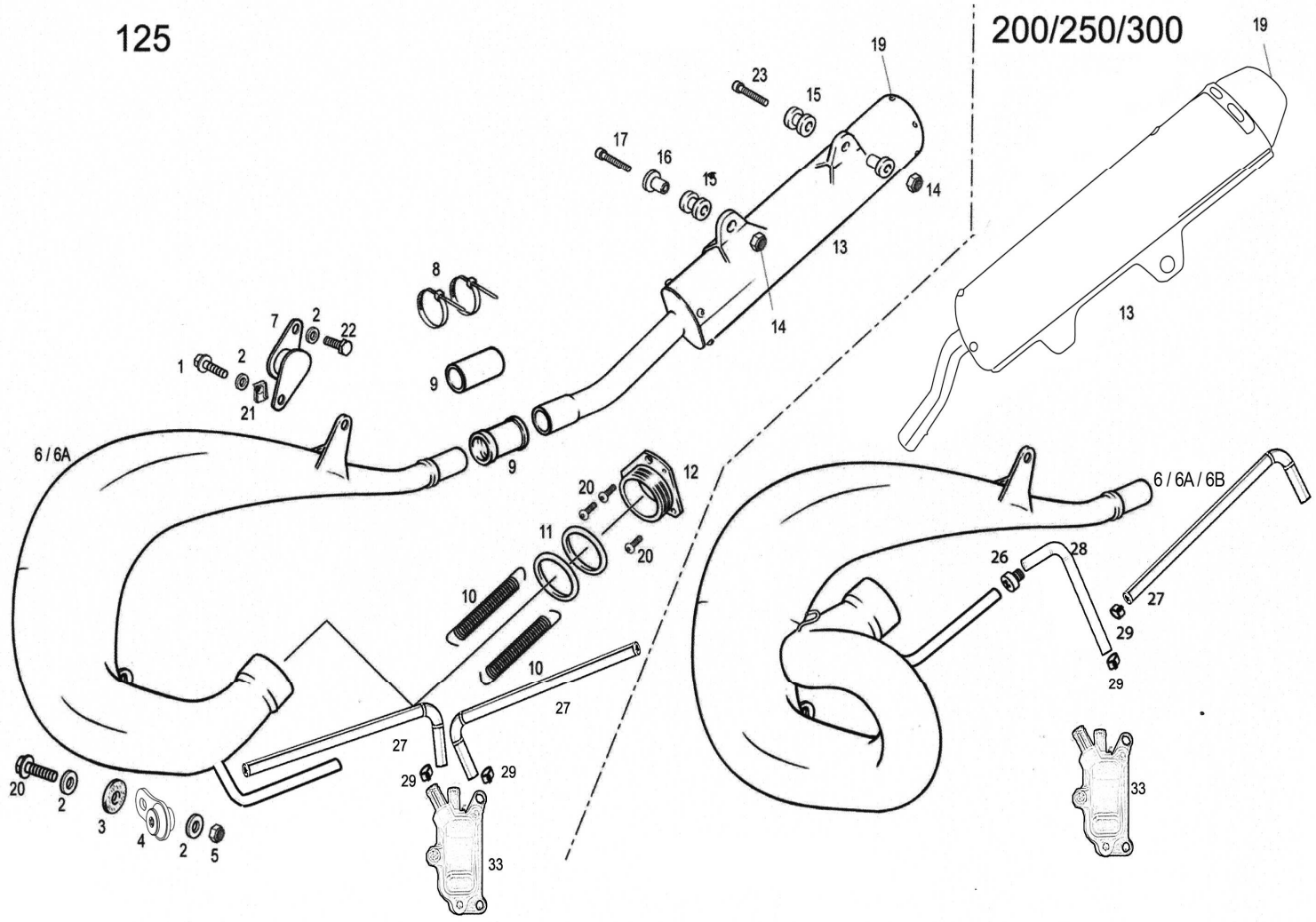
125
200/250/300
19
23
15
17
16
15
14
13
14
8
7
2
22
1
2
21
9
9
6 / 6A
12
20
11
20
10
10
27
27
29
29
20
2
3
4
2
5
33
19
13
6 / 6A / 6B
26
28
27
29
29
33

Nº	DESCRIPCION / DESCRIPTION	125	250	300	Cant.
1	HEXAGONAL 6X15 / HEXAGONAL		T0106015		1
2	ARANDELA 6X18X1,5 / 6X18X1.5 WASHER		T4006018		4
3	ARANDELA KLINGERIT / KLINGERIT WASHER				1
4	SILENTBLOCK ESCAPE / EXHAUST SILENTBLOCK	-	-	BIC050526004	1
4A	SILENTBLOCK ESCAPE / EXHAUST SILENTBLOCK	BE25626004	BTC050520004	BE25626004	
5	TUERCA AUTOBLOCANTE BAJA M6 / LOW SELF-LOKING NUT M6		T2106001		1
6	TUBO ESCAPE / EXHAUST PIPE	BE850001209	BE850002508	BE850002508	1
6A	TUBO ESCAPE CATALIZADO / CATALYZED EXHAUST PIPE X BUFANDA INOX	BE85000H1209	-	-	1
7	SILENTBLOCK ESCAPE / EXHAUST SILENTBLOCK	--	BE25626004		1
8	BRIDA UNEX 4,8X36 / UNEX CLAMP 4.8X36		BE25634007		2
9	JUNTA ESCAPE / EXHAUST GASKET	BE12626003	BE25626003		1
10	MUELLE ESCAPE / EXHAUST SPRING	--	BE25610042		2
11	TÓRICA TUBERA ESCAPE 44X3 FP / EXHAUST O'RING		BE250526006		2
12	TUBERA ESCAPE / EXHAUST PIPE	ME120316019	ME250516019		1
13	SILENCIOSO / SILENCER	BE120726002H	BE87010R2510	BE87010R2510	1
14	TUERCA AUTOBLOC. DIN-6926 M6 C/ARAN. / SELF-BLOCKING NUT WITH WAS.	----	T2206002		2
15	SILENTBLOCK SILENCIADOR / SILENTBLOCK SILENCER		BE250026005		2
16	CASQUILLO SILENTBLOCK SILENCIOSO / SILENTBLOCK SILENCER BUSHING	BE25002600	BE87300R2509	BE87300R2509	2
17	ALLEN 6X30 / ALLEN BOLT 6X30		T0306030		1
19	REMACHE D.4 SILENCIOSO / SILENCER RIVET D4	-----	BE250026032		6
20	TORNILLO HEXAGONAL CON ARANDELA 6X14 / HEXAGONAL WITH WASHER		T0206014		4
21	TUERCA RAPIDA NUT M6 / M6 FAST NUT		T2606000		1
22	TORNILLO ESPIRAL 6X16 / SCREW		T0206016		1
23	ALLEN 6X50 / 6X50 BOLT		T0306050		1
25	CATALIZADOR 125 / 125 CATALYST	BE120126250			1
26	FILTRO AIRE SECUNDARIO / SECONDARY AIR FILTER	-	BT280626059	BT280626059	1
27	TUBO GOMA VÁLVULA A FILTRO / VALVE TO FILTER RUBBER TUBE		BE785502509	BE785502509	1
28	TUBO GOMA ESCAPE A VÁLVULA / EXHAUST TO VALVE RUBBER TUBE	BE785551209 (2)	BE785551209	BE785551209	1
29	ABRAZADERA COBRA 14	MFS450410031	MFS450410031	MFS450410031	2
30	PROTECTOR ESCAPE HOMOLOGADO / ACCREDITED EXHAUST PROTECTOR	-	BE250626254	BE250626254	1
31	ABRAZADERA 50-70 / 50-70 CLAMP	-	BE250328033	BE250328033	1
32	ABRAZADERA 70-90 / 70-90 CLAMP	-	BE250626255	BE250626255	1
33	VALVULA AIS / AIS VALVE	BE785652509	BE785652509	BE785652509	1

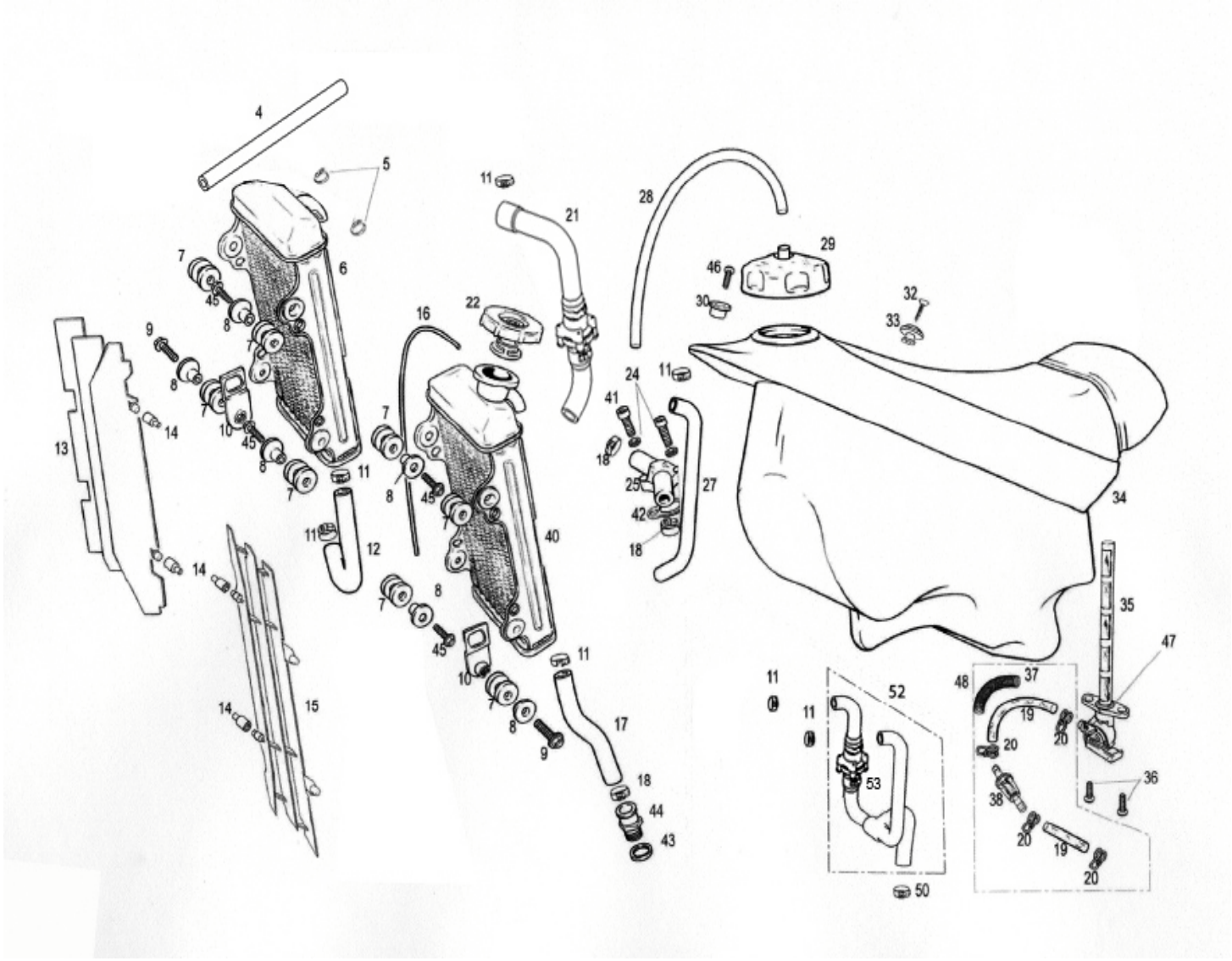
4
5
6
7
45
8
9
10
11
12
13
14
15
16
17
18
19
20
21
22
24
25
27
28
29
30
32
33
34
35
36
37
38
40
41
42
43
44
46
47
48
50
52
53

Nº	DESCRIPCION / DESCRIPTION	125	250/300	Cant.
4	TUBO INTERCONEXIÓN RADIADORES / RADIATORS TANK HOSE CONNECTION		BE713002511	2
5	ABRAZADERA MUELLE / SPRING CLAMP		BE250210047	4
6	RADIADOR DERECHO / RIGHT RADIATOR	BE120732000	BE250732000	1
7	SILENTBLOCK RADIADOR / RADIATOR SILENTBLOC		BIE500132031	8
8	CASQUILLO INF. SUJ. RADIADOR / LOWER RADIATOR HOLDER BUSHING		BE25832040	5
9	TORNILLO ESPECIAL 6X16 / SPECIAL SCREW 6X16		T0206016	2
10	PLÁSTICO LATERAL RADIADOR / RADIATOR SIDE PLASTIC		BE25632015	2
11	ABRAZADERA COBRA DE 22 / COBRA CLAMP 22		L200038	6
12	TUBO RADIADOR INFERIOR DERECHO / RIGHT LOWER RADIATOR HOSE	BE120132006	BE25632006	1
13	REJILLA RADIADOR DERECHO / RIGHT RADIATOR RACK		BE250720001	1
15	REJILLA RADIADOR IZQUIERDO / LEFT RADIATOR RACK		BE250720002	1
16	TUBO SOBRANTE RAD. 5X8 – 39CM. / RADIATOR BREATHE HOSE 5X8 – 39CM		BE25632009	1
17	TUBO RADIADOR INFERIOR IZQUIERDO / LEFT LOWER RADIATOR HOSE	BE25632007	BE250432007	1
18	ABRAZADERA COBRA 21 / COBRA CLAMP 21		L200046	3
19	TUBO GASOLINA 16 CM. TRENZADO / FUEL HOSE 16 CM		BE25636004	1
20	ABRAZADERA MUELLE M-12.3 / SPRING CLAMP M-12.3		BE25610044	4
21	TUBO RADIADOR SUPERIOR DERECHO / RIGHT UPPER RADIATOR HOSE	BE710101211	BE710102511	1
22	TAPÓN RADIADOR 1.8 bar / RADIATOR CAP 1.8 bar		BFS701504509	1
23	TUBO CULATA / CYLINDER HEAD HOSE	BE120332018	-	1
24	ARANDELA COBRE 6x10x1.5 TAPA TERMOSTATO / 6x10x1.5 WASHER		ME25916002	2
25	TAPA TERMOSTATO / TERMO COVER		ME250316001	1
27	TUBO RADIADOR SUPERIOR IZQUIERDO / LEFT UPPER RADIATOR HOSE	BE250732002	BE250732002	1
28	TUBO DEPÓSITO LIQUIDO FRENO-BOMBA / BRAKE FLUID TANK TO PUMP HOSE		BE250520011	1
29	TAPÓN GASOLINA / FUEL CAP		BE250520010	1
30	CASQUILLO DEPÓSITO / TANK BUSHING		BE25610007	1
32	TORNILLO ROSCA-CHAPA 10X1 / SCREW 10X1		T0610001	1
33	CASQUILLO DEPÓSITO / TANK BUSHING		BIE050210007	1
34	DEPÓSITO EC2010 / EC2010 FUEL TANK		BE760002510	1

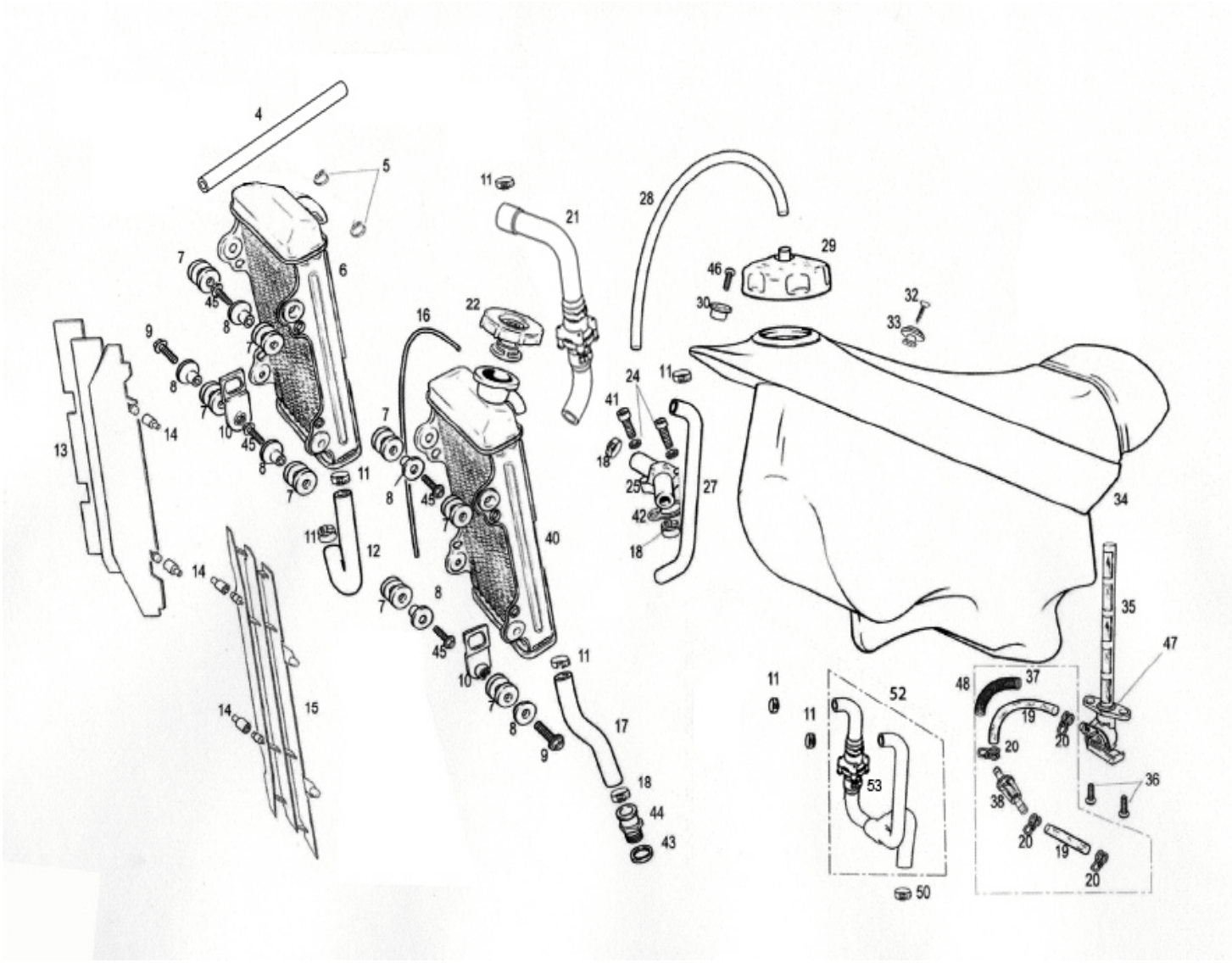
4
5
6
7
45
8
9
10
11
12
13
14
15
16
17
18
44
43
21
22
28
29
46
30
32
33
24
41
25
42
27
40
34
35
47
52
53
48
37
19
20
36
38
50

Nº	DESCRIPCION / DESCRIPTION	125	250/300	Cant.
35	GRIFO GASOLINA / FUEL TAP		BE760202510	1
36	ULS 6X12 TOPE FRENO, PRO. FIL. / BRAKE END ULS SCREW 6X12		T0506012	2
37	MUELLE PROTECCIÓN TUBO GASOLINA / FUEL HOSE PROTECTOR SPRING		BE25910068	1
38	FILTRO GASOLINA / FUEL FILTER		BE25610051	1
40	RADIADOR IZQUIERDO CON TAPÓN / LEFT RADIATOR WITH CAP	BE120732001	BE250732001	1
41	ALLEN 5X30 / 5X30 ALLEN		T0305030	2
42	JUNTA TAPA TERMOSTATO / TERMOSTAT CAP GASKET		ME25944011	1
43	ARANDELA RACORD ENTRADA AGUA / INLET RACORD FIBER WASHER		ME25610014	1
44	RACORD ENTRADA AGUA / INLET WATER RACORD		ME25610013	1
45	ALLEN 6X20 / 6X20 ALLEN BOLT		T0306020	4
46	TORNILLO ESPECIAL 6X20 / 6X20 SPECIAL SCREW		T0206020	1
47	TÓRICA GRIFO GASOLINA / FUEL O'RING		B740120	1
48	CTO. GASOLINA / FUEL PIPE SET		BEH200610133	1
49	ABRAZADERA COBRA 26 / 26 COBRA CLAMP	BE120132051		1
50	ABRAZADERA COBRA 25 / 25 COBRA CLAMP	BE120132052		1
52	TUBO SUP. RADIADOR A CULATA / RADIATOR TO CYL.HEAD HOSE SET	BE710101211		1
53	CUERPO TERMOSTATO	BE250432070	BE2500432070	1

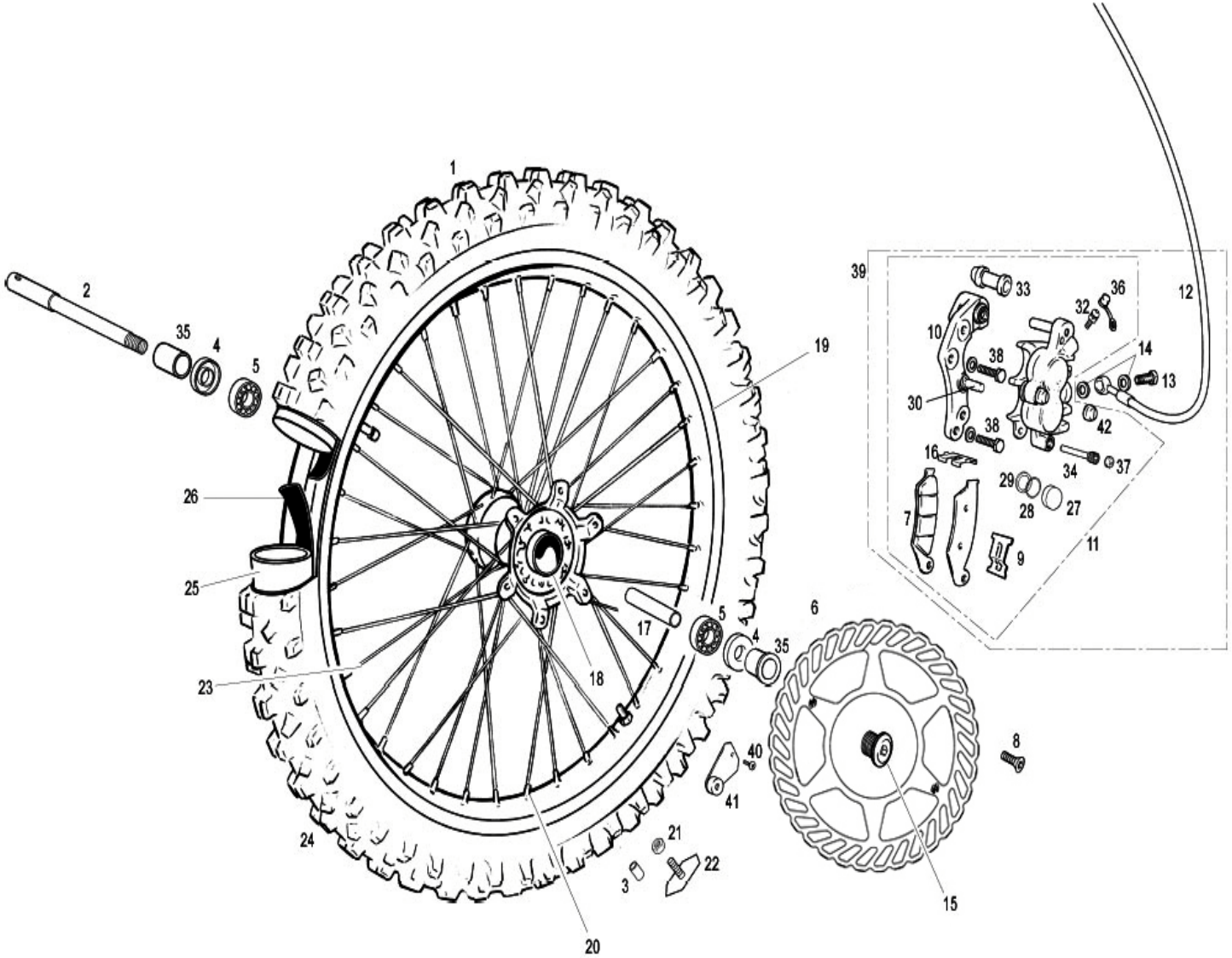
1
2
35
4
5
26
25
23
24
20
19
17
18
5
4
35
6
8
15
40
41
21
22
3
39
33
36
32
12
10
38
14
13
30
38
42
16
34
37
29
28
27
7
9
11

Nº	DESCRIPCION / DESCRIPTION		125/250/300	Cant.
1	RUEDA DELANTERA / FRONT WHEEL		BE50000CT2511	1
2	EJE RUEDA DELANTERA / FRONT WHEEL AXIS		BC250718017	1
3	CASQUILLO AGARRE CUBIERTA DELANTERA / FRONT TIRE HOLDING BUSHING		BE555102510	1
4	RETÉN CUBO DELANTERO 30X42X7 / 30X42X7 FRONT WHEEL GASKET		BE250418057	2
5	COJINETE 6905 2RSR / BEARING		ME120136055	2
6	DISCO FRENO DELANTERO / FRONT BRAKE DISC		BE520002510	1
7	PASTILLAS DE FRENO DELANTERO / FRONT BRAKE PADS KIT		BE620652508	1
8	HEXAGONAL 6X16 / HEXAGONAL BOLT 6X16		T0566014	6
9	PLATINA (A) SUJ. PASTILLAS DEL. / FRONT BRAKE PADS HOLDER BRACKET (A)		BE620112508	1
10	SOPORTE PINZA DELANTERO / FRONT CALIPER SUPPORT		BE620102508	1
11	PINZA FRENO DELANT. / FRONT BRAKE CALIPER		BE250722000	1
12	LATIGUILLO FRENO DELANTERO / FRONT BRAKE HOSE		BE250522002	1
13	RACORD SUJ. LATIGUILLO 10X1,25 / HOSE HOLDER RACORD 10X1.25		BC25722006	1
14	ARANDELA LATIGUILLO 10X14X1 / HOSE WASHER 10X14X1		BE25622007	2
15	TORNILLO EJE RUEDA DELANTERA / FRONT WHEEL AXIS BOLT		BE250718026	1
16	PLATINA (B) SUJ. PASTILLAS DELANT. / FRONT BRAKE PADS HOLDER BRACKET (B)		BE620122508	1
17	DISTANCIADOR / SPACER		BE250418058	1
18	CUBO RUEDA DELANTERO SEP. INT. ALUM. / FRONT WHEEL HUB		BE250418007	1
19	LLANTA 1,60X21 / RIM 1.60X21		BE54001R2509	1
20	TUERCA RADIO DELANTERO / FRONT SPOKE NUT		BE250218010	36
21	TUERCA AUTOBLOCANTE M8 BAJA / M8 NUT SELF-LOCKING LOWER		T2108001	1
22	AGARRE CUBIERTA DELANTERA / FRONT TIRE HOLDER		BE505002509	1
23	RADIO DELANTERO 243X3,5 / FRONT SPOKE 243X3.5		BE542012508	36
24	NEUMÁTICO DELANTERO 90/90-21 / FRONT TIRE 90/90-21		BE501002511	1
25	CÁMARA DELANTERA / FRONT AIR HOSE		BE502002511	1
26	PROTECTOR BANDA DELANTERA / FRONT RIM BAND		BE503002511	1
27	KIT REPARACIÓN PISTONES / PISTON REPARATION SET		BE620422508	4
32	KIT SANGRADOR / BLEEDER SET		BE620602508	1
33	PROTEC. TORNILLO PINZA FRENO DEL. / FRONT BRAKE CALIPER BOLT PROT.		BE620682508	1
35	CASQUILLO RUEDA DELANTERA / FRONT WHEEL BUSHING		BC250418019	2
39	CTO. FRENO DELANTERO PURGADO / FRONT BRAKE SET		BE250422108	1
40	ULS 3X10 NEGRO CON ARANDELA / BLACK 3X10 ULS WITH WASHER		T0323010	1
41	CTO. SOPORTE CON IMAN C.K. / SUPPORT WITH MAGNET SET		BE250334008	1
42	GUARDAPOLVO / DUST COVER		BE620692508	1

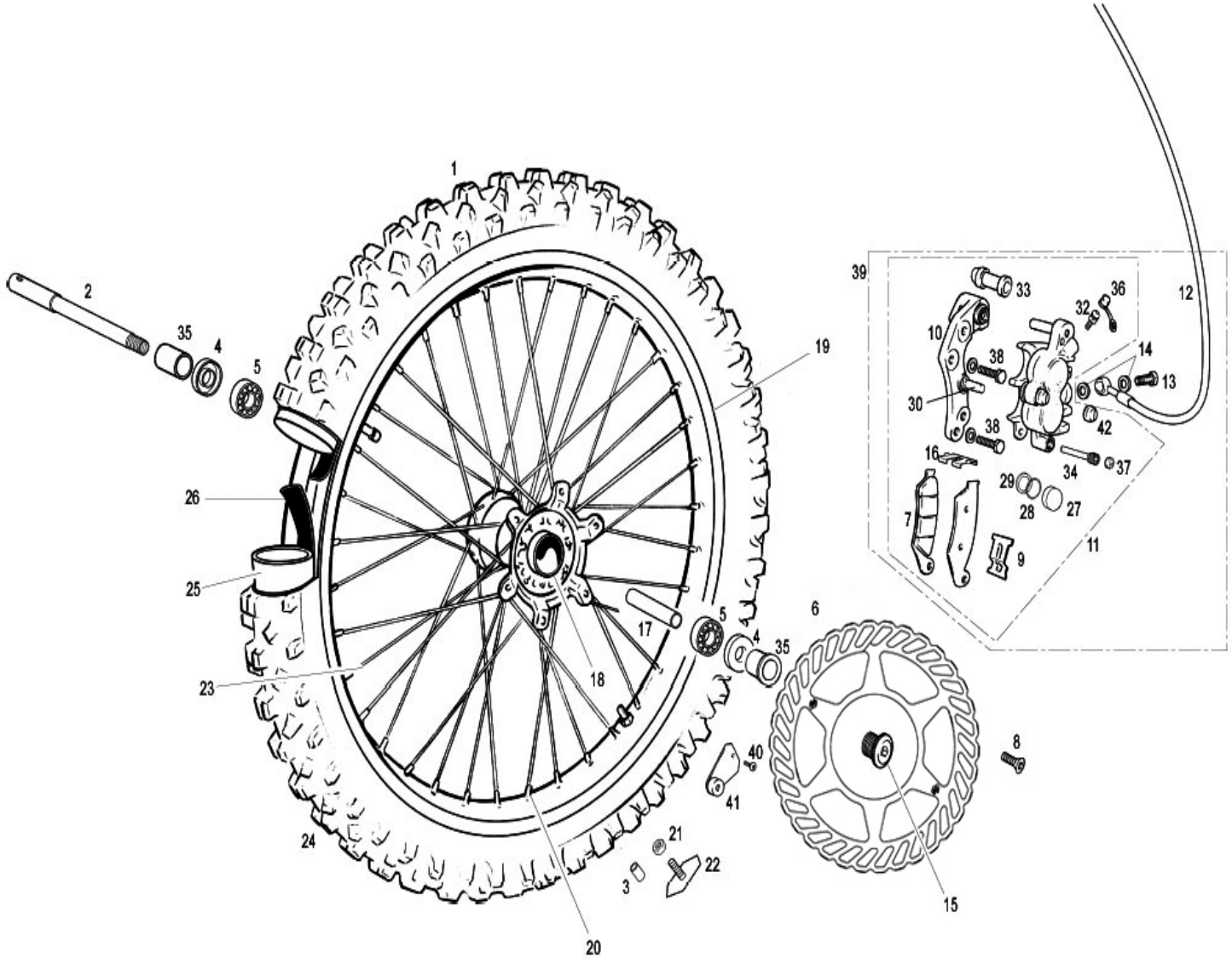
1
2
35
4
5
26
25
23
24
20
19
17
18
5
4
35
6
8
15
40
41
21
22
3
39
33
36
32
12
10
38
14
13
30
42
38
16
34
37
29
28
27
7
9
11

Nº	DESCRIPCION / DESCRIPTION	125/250	Cant.
1	RUEDA DELANTERA CROSS / FRONT WHEEL	BC50000CT2509	1
2	EJE RUEDA DELANTERA CROSS / CROSS FRONT WHEEL AXLE	BC250418017C	1
7	PASTILLAS DE FRENO DELANTERO / FRONT BRAKE PADS	BC250022065	1
19	LLANTA 1.60X21 SILVER / RIM 1.60X21	BE25618006	1
24	NEUMATICO 90-90-21 CROSS M12 / FRONT TIRE 90/90-21	BC25718102	1

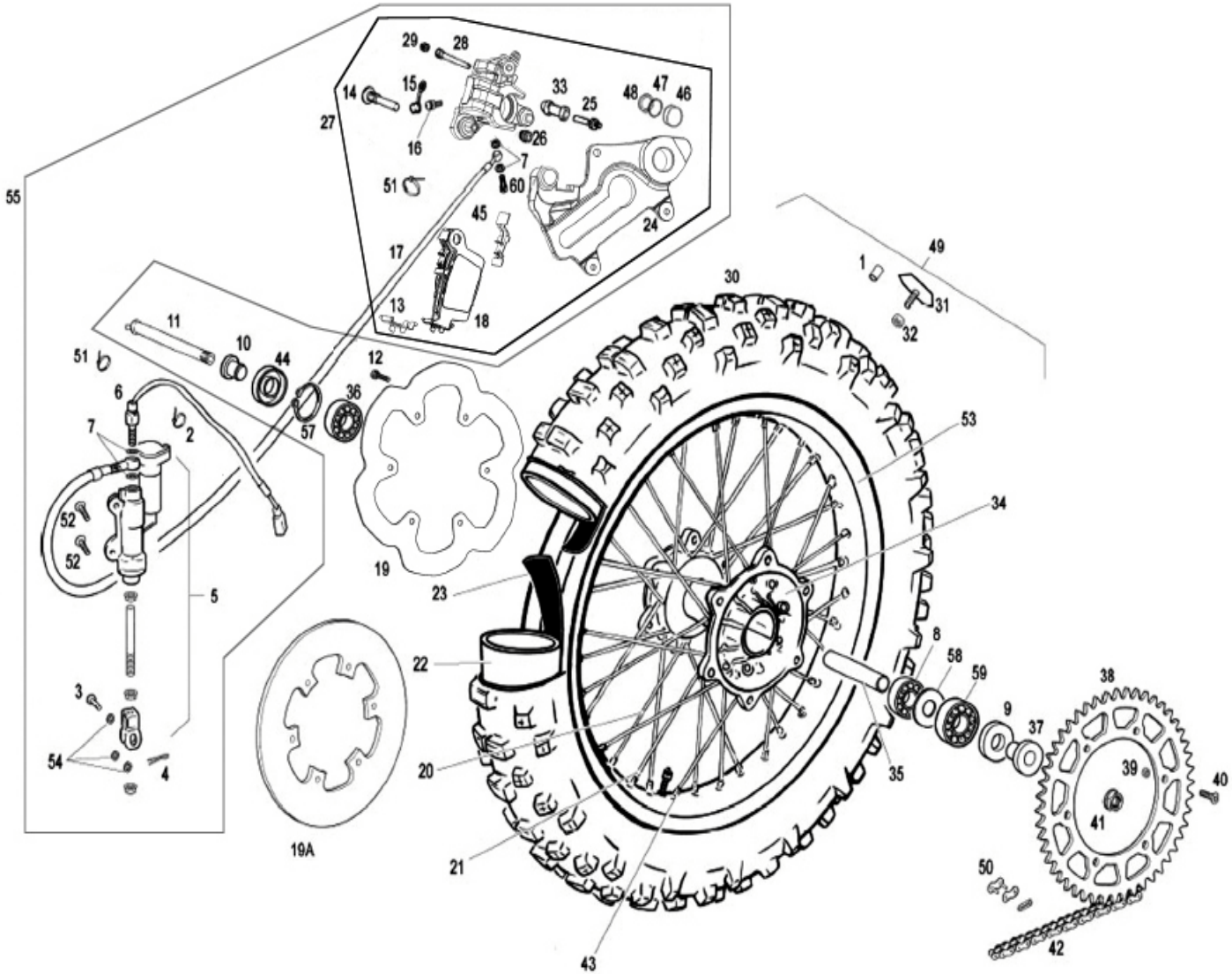
29
28
14
15
33
25
48
47
46
27
16
26
7
51
60
45
24
17
13
18
55
11
10
44
12
36
57
51
6
7
2
52
52
5
3
54
4
19
19A
30
1
49
31
32
53
34
23
22
20
21
43
8
58
59
9
37
38
39
41
40
35
50
42

Nº	DESCRIPCION / DESCRIPTION	125/250/300	Cant.
1	CASQUILLO AGARRE CUBIERTA DELANTERA / FRONT TIRE HOLDING BUSHING	BE555102510	1
2	BRIDA UNEX 2244 16/102 4.8X36 / CLAMP 2244 16/102 4.8X36	BE25634007	1
3	PASADOR 8X20 PEDAL FRENO / BRAKE PEDAL PIN 8X20	BE25622026	1
4	CLAVILLA PASADOR FRENO 2X20 / BRAKE PEDAL PIN STOPPER	BE25622027	1
5	BOMBA FRENO TRASERO NISSIN / NISSIN REAR BRAKE PUMP	BE660002509	1
6	INTERRUPTOR STOP BOMBA NISSIN / NISSIN BRAKE PUMP STOP SWITCH	BE250334003	1
7	ARANDELA LATIGUILLO 10X14X1 / HOSE WASHER 10X14X1	BE25622007	4
8	COJINETE 6204 2RSR / BEARING 6204 2RSR	C180700	1
9	RETÉN RUEDA TRASERA / REAR WHEEL SEAL	BE250318055	1
10	DISTANCIADOR RUEDA TRASERA CORTO / SHORT REAR WHEEL SPACER	BE250018025	1
11	EJE RUEDA TRASERA / REAR WHEEL AXIS	BE25618020	1
12	TORNILLO HEXAGONAL 6X16 DISCO TRAS. / R. DISC BRAKE HEX. SCREW 6X16	T0206014	6
13	PLATINA (A) SUJ. PASTILLAS TRAS. / REAR BRAKE PADS HOLDER BRACKET (A)	BE620112508	1
14	TORNILLO SUJECIÓN PINZA / CALIPER HOLDER SCREW	BE250022096	1
15	TAPÓN SANGRADOR / BLEEDER CAP	BE250022055	1
16	SANGRADOR / BLEEDER	BE250022060	1
17	LATIGUILLO FRENO TRASERO NISSIN / NISSIN REAR BRAKE HOSE	BE661002509	1
18	PASTILLAS DE FRENO TRASERO NISSIN / NISSIN REAR BRAKE PADS KIT	BE675002509	1
19	DISCO FRENO TRASERO / REAR BRAKE DISC	BE570002510	1
19A	DISCO FRENO TRASERO MACIZO / REAR BRAKE DISC	BE250222012/2	1
20	RADIO 192X4,5 LADO FRENO 18" / 18" BRAKE-SIDE SPOKE 192X4.5	BE250018015	18
21	RADIO 188X4,5 LADO CORONA 18" / 18" SPROCKET-SIDE SPOKE 188X4.5	BE250018014	18
22	CAMARA TRASERA 18 CR / REAR AIR HOSE 18 CR	BE552002511	1
23	PROTECTOR BANDA TRASERA 18 / REAR RIM BAND	BE553002511	1
24	SOPORTE PINZA TRASERA / REAR CALIPER SUPPORT	BE671002509	1
25	TORNILLO CLAVIJA PINZA FRENO / BRAKE CALIPER BOLT	BE250022034	1
26	GUARDAPOLVO / DUST COVER	BE675802509	1
27	PINZA FRENO TRASERO / REAR BRAKE CALIPER CTO.	BE67000CT2509	1
28	PASADOR PASTILLAS / BRAKE PADS PIN	BE250022094	1
29	PROTECCIÓN PASADOR / PIN PROTECTION	BE250022095	1
30	NEUMÁTICO TRASERO 140/80-18 / REAR TYRE 140/80-18	BE551002511	1

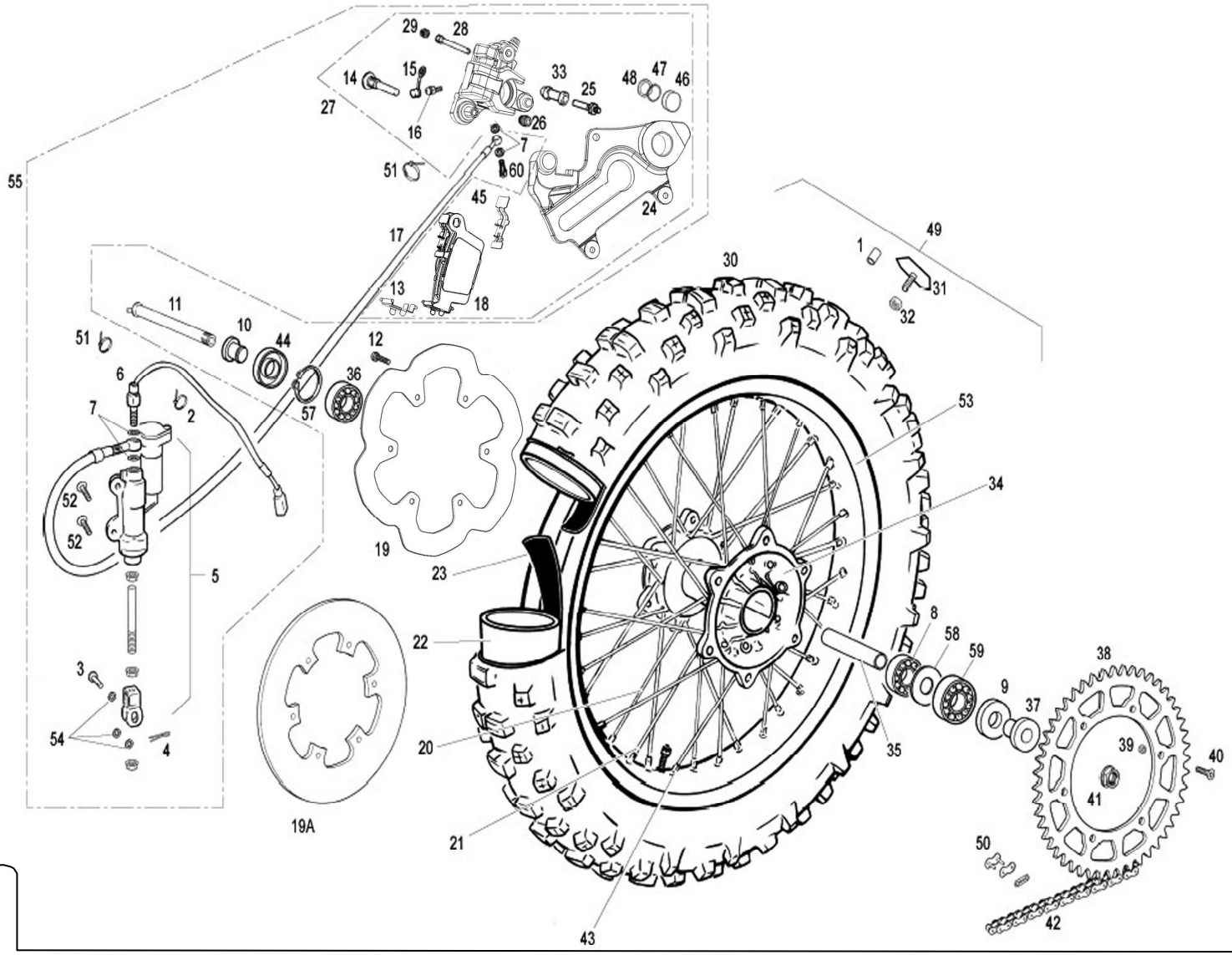
29
28
14
15
33
25
48
47
46
27
16
26
7
51
60
55
45
24
17
13
18
49
1
31
32
30
11
10
44
12
51
6
36
57
7
2
53
52
52
34
19
23
5
22
8
58
59
38
3
9
37
54
4
20
35
39
40
41
19A
21
50
42
43

Nº	DESCRIPCION / DESCRIPTION			125/250/300	Cant.
31	AGARRE CUBIERTA TRASERA / REAR TYRE HOLDER			BE555002509	1
32	TUERCA AUTOBLOCANTE M8 BAJA / SELF-LOCKING NUT M8			T2108001	1
33	PROTECTOR TORNILLO / SCREW PROTECTOR			BE250022039	1
Nº	**DESCRIPCION / DESCRIPTION**		**125**	**250**	**Cant.**
34	CUBO RUEDA TRASERA / REAR WHEEL HUB			BE250318027	1
35	DISTANCIADOR RUEDA TRASERA INTE. / REAR WHEEL SPACER			R575700	1
36	COJINETE 6004 2RSR / BEARING 6004 2RSR			C160001	1
37	DISTANCIADOR RUEDA DELANTERA LARGO / LONG WHEEL SPACER			BE250318021	1
38	CORONA Z48 SERIE / Z48 SERIAL SPROCKET			BE573002511	1
38A	CORONA Z42 / Z42 SPROCKET			BE250118034SM	1
38B	CORONA Z44 / Z44 SPROCKET			BF250018024	1
38C	CORONA Z46 / Z46 SPROCKET			BE25918124	1
38D	CORONA Z47 / Z47 SPROCKET			BE25618024	1
38F	CORONA Z49 / Z49 SPROCKET			BC25818024	1
38G	CORONA Z50 / Z50 SPROCKET			R840701	1
38H	CORONA Z52 / Z52 SPROCKET			BE12618024	1
38I	CORONA Z53 / Z53 SPROCKET			BE25918125	1
38J	CORONA Z54 / Z54 SPROCKET			BE25918126	1
38K	CORONA Z51 SERIE / Z51 SERE SPROCKET			BE12618034	1
38L	CORONA Z39 / Z39 SPROCKET			BE250118124SM	1
38M	CORONA Z40 / Z40 SPROCKET			BE250118125SM	1
39	TUERCA AUTOBLOCANTE M8 ALTA / HIGH SELF-LOCKING SPROCKET NUT M8			T2208002	6
40	ALLEN CÓNICO 8X30 / CONIC ALLEN BOLT 8X30			T0408030	6
41	TUERCA AUTOBLOCANTE RUEDA TRASERA / REAR WHEEL SELF-LOCKING NUT			BE25618023	1
42	CADENA REGINA / REGINA CHAIN			BE250310036	1
42A	CADENA REGINA 125 / 125 REGINA CHAIN		BC120110036	-	1
43	TUERCA RADIO TRASERO / REAR SPOKE NUT			BE250018016	36
44	RETÉN / SEAL			C160710	1
45	PLATINA (B) SUJ. PAST. TRASERAS / REAR BRAKE PADS HOLDER BRACKET (B)			BE620122508	2
46	PISTÓN PINZA FRENO TRASERO / REAR BRAKE CALIPER PISTON			BE675602509	2
47	RETÉN PISTÓN PINZA FRENO TRASERO / REAR BRAKE CALIPER PISTON O'RING			BE675502509	2
48	TÓRICA PISTÓN PINZA FRENO TRASERO / REAR BRAKE CALIPER PISTON SEAL			BE250022048	2
49	RUEDA TRASERA / REAR WHEEL SET			BE55000CT2511	1
50	ENGANCHE CADENA / CHAIN SPLIT LINK			BE250310066	1

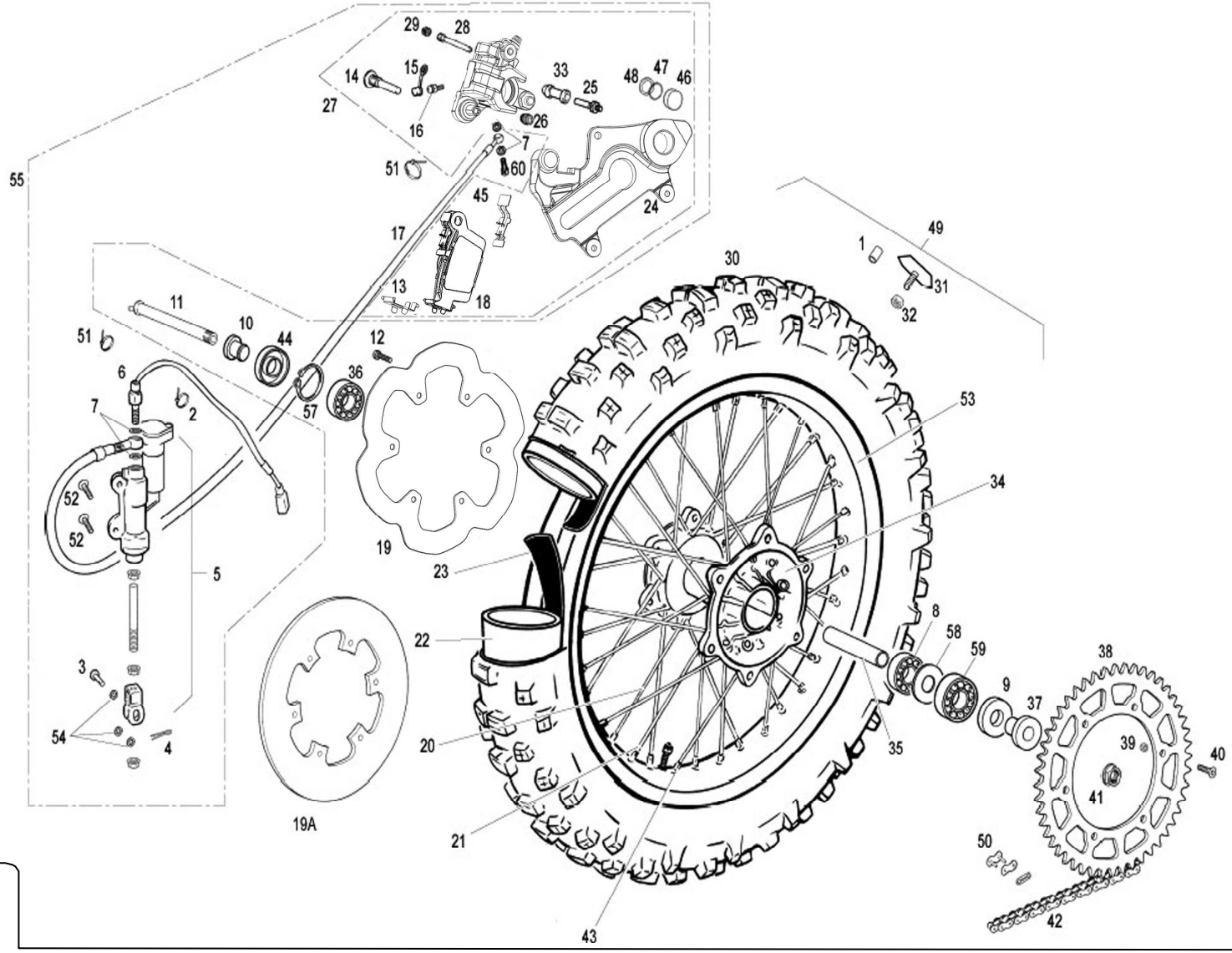
29
28
14
15
33
25
48
47
46
27
16
26
7
51
60
55
45
24
17
13
18
49
1
30
31
32
11
10
44
12
51
6
36
7
57
53
2
52
52
34
19
23
5
22
8
58
59
38
3
9
37
54
4
20
35
39
40
41
19A
21
50
42
43

Nº	DESCRIPCION / DESCRIPTION	250	Cant.
51	BRIDA UNEX CORTA / SHORT CLAMP	BE25634010	3
52	ULS 6X20 CON ARANDELA PLATA / 6X20 ULS WITH WASHER	T0556020	2
53	LLANTA 2.15X18 / RIM 2.15X18	BE590002509	1
54	ARANDELA 8X16X1 / 8X16X1 WASHER	T4008018	3

Nº	DESCRIPCION / DESCRIPTION	125/250/300	Cant.
55	CTO. FRENO TRASERO / REAR BRAKE SET	BE67000CT2509	1
56	CASQUILLO SEPARADOR BOMBA FRENO TRASERO / SPACER BRAKE BUSHING	BT120222097	1
57	SEEGER DIÁMETRO 42 / 42 DIAMETER SEEGER	BE25618038	1
58	ARANDELA INTERIOR CUBO / INTERIOR HUB WASHER	BE250318056	1
59	COJINETE RUEDA 6005-25R1 C3 / WHEEL BEARING	BE250318054	1
60	RACORD SUJ. LATIGUILLO 10X1,25 / HOSE HOLDER RACORD 10X1.25	BC25722006	1

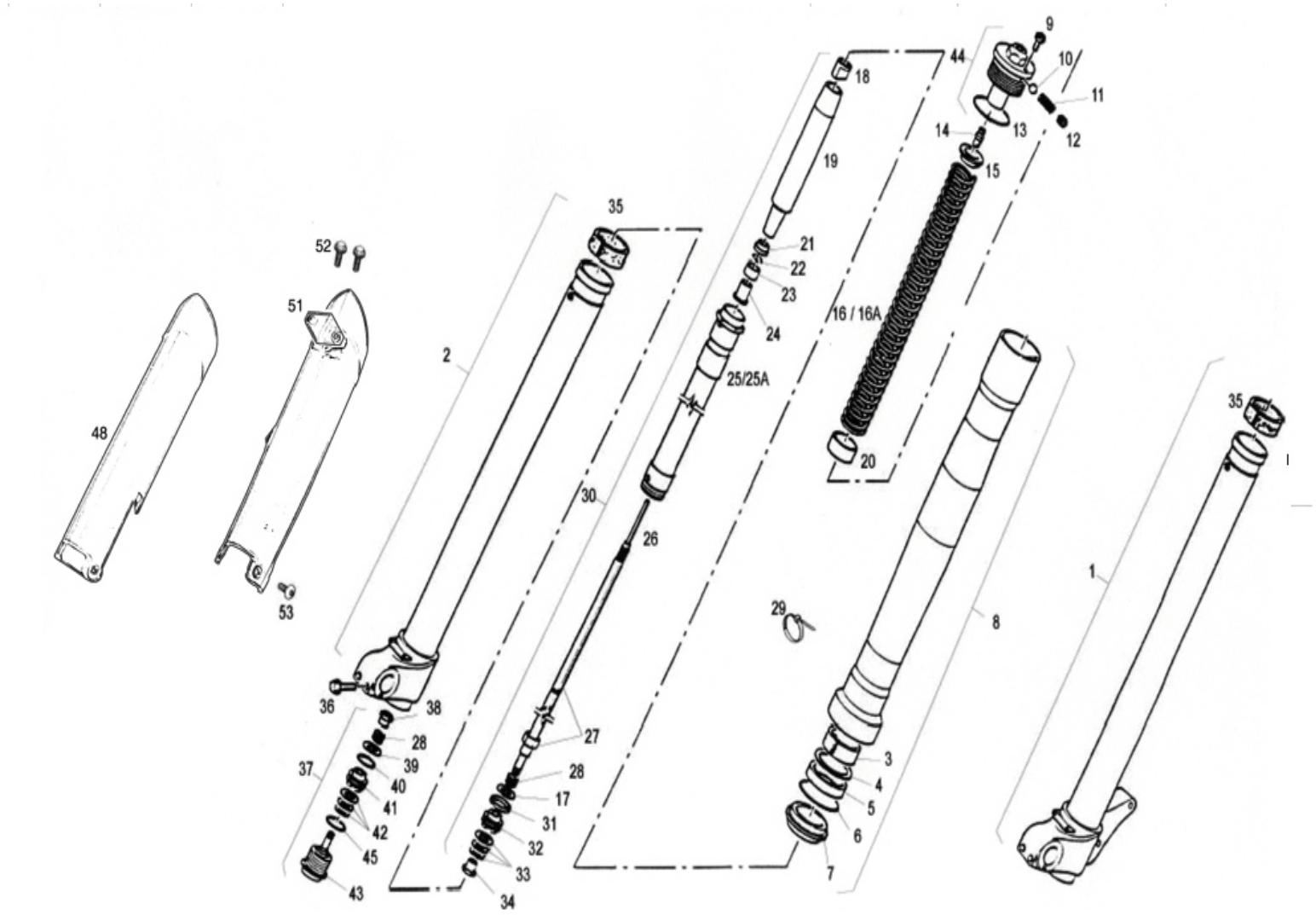
9
10
11
12
13
14
15
44
18
19
21
22
23
24
25/25A
16 / 16A
20
35
52
51
48
53
2
30
26
29
8
1
36
38
28
39
40
41
42
45
43
37
27
28
17
31
32
33
34
3
4
5
6
7

Nº	DESCRIPCION / DESCRIPTION			125	Cant.
1	BASE HORQUILLA IZQUIERDA / LEFT FORK BASE			BE250414143	1
2	BASE HORQUILLA DERECHA / RIGHT FORK BASE			BE250414142	1
3	GLACIER BOTELLA 538103 50x45x15 / OUTER TUBE BUSHING			BE250314131	2
4	ANILLO DE CIERRE / RETAINING CUP			BE250114133	2
5	RETÉN SUSPENSIÓN 45X58X11 / OIL SEAL			C240701	2
6	ANILLO DE CIERRE / STOP RING			BE25714132	2
7	GUARDAPOLVO / DUST SEAL			BE25714131	2
8	CTO. BARRA SUSPENSIÓN / OUTER TUBE UNIT			BE250514110	2
9	TORNILLO Y JUNTA TÓRICA / SCREW+ O'RING			BE25714103	2
10	TÓRICA TAPÓN REGULACIÓN / SET SCREW			BE250114225	2
11	MUELLE TAPÓN REGULACIÓN / REBOUND SPRING			BE250114226	2
12	TORNILLO PEQUEÑO TAPÓN REGULACIÓN / SCREW			BE250114227	2
13	TÓRICA TAPÓN REGULACIÓN / REGULATION CAP O'RING			BE250114104	2
14	CASQUILLO REGULACIÓN / PIN + O'RING			BE250114112	2
15	CASQUILLO GUIA MUELLE / SPRING GUIDE BUSHING CUP			BE250114107	2
16	MUELLE K=4.2 / SPRING K=4.2			BE250114268	2
16A	KIT MUELLE Y CASQUILLO K:4.0 / SPRINGS K=4.0 + SLEEVES			BE250114228	2
17	ARANDELA 22X8.1X0.3 / SHIM 22X8.1X0.3			BE250514235	2
18	TUERCA BLOQUEADOR M12X25 / LOCK NUT			BE250114242	2
19	TUBO GUIA MUELLE / SPRING GUIDE			BE250514229	2
20	TOPE PRECARGA / PRELOAD SLEEVE			BE120514109	2
21	TOPE DE FONDO / NUT			BE250114230	2
22	ANILLO RETENCIÓN / STOP RING			BE250114231	2
23	TOPE FONDO HUG D45 / FOOT NUT			BE250514232	2
24	TOPE FONDO USD D45 / FOOT NUT CUP			BE250114233	2
25	CARTUCHO AMORTIGUADOR / CARTRIDGE BODY			BE250514114	2
25A	CARTUCHO AMORTIGUADOR / CARTRIDGE BODY			-	2
26	VARILLA INTERNA / INNER ROD			BE250114234	2
27	CTO. VARILLA / DAMPING SHAFT UNIT			BE250514116	2
28	MUELLE / REBOUND SPRING			BE250114118	4
29	BRIDA UNEX 2244 16/02 4.8X30 / UNEX CLAMP 2244 16/02 4.8X30			BE25634007	2

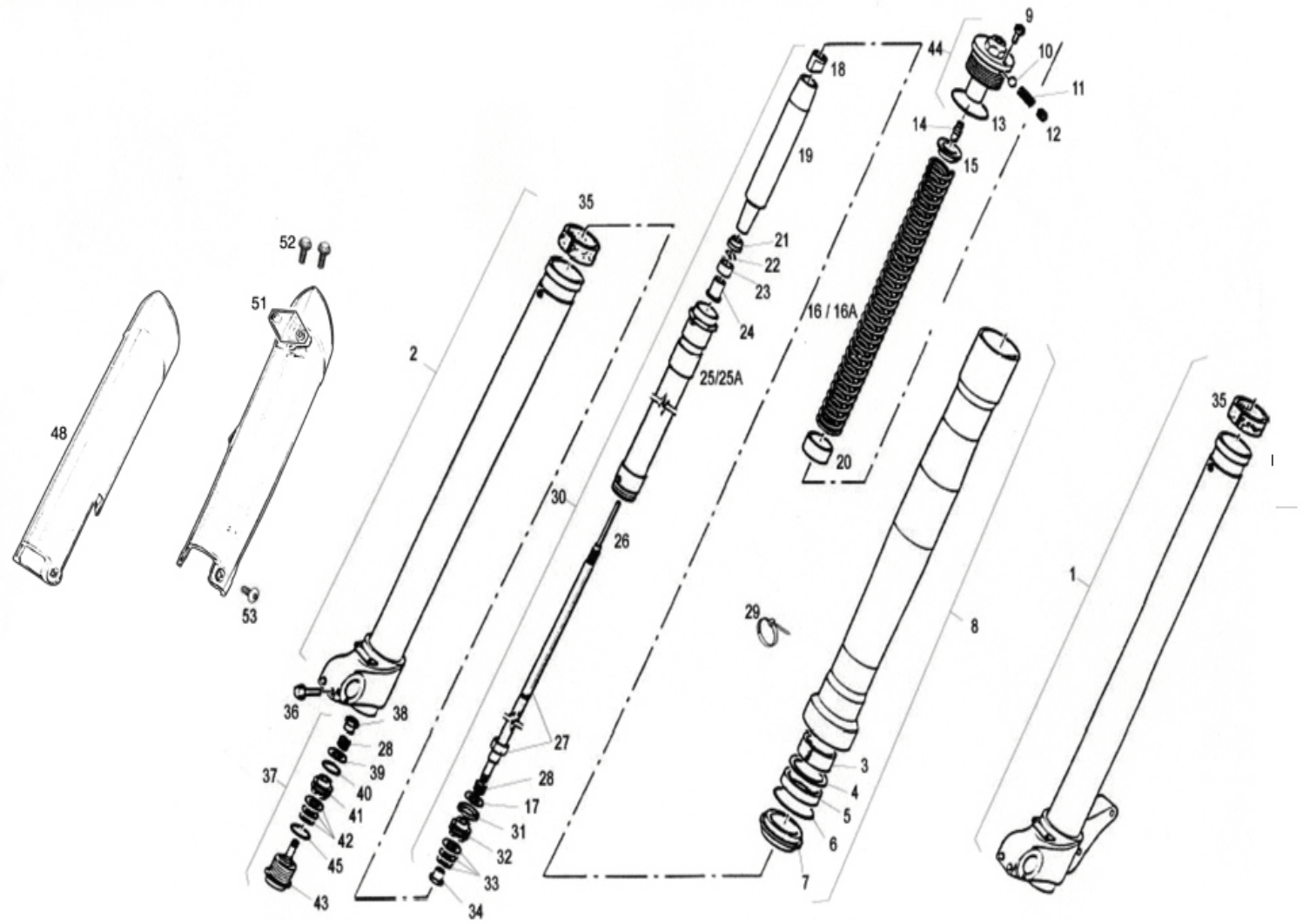
9
10
11
12
13
14
15
16 / 16A
18
19
20
21
22
23
24
25/25A
26
27
28
29
30
31
32
33
34
35
36
37
38
39
40
41
42
43
44
45
48
51
52
53
1
2
3
4
5
6
7
8

Nº	DESCRIPCION / DESCRIPTION			125	Cant.
31	SEGMENTO PISTÓN / PISTON RING			BE250114120	2
32	PISTÓN SUSPENSIÓN / REBOUND PISTON			BE250514119	2
33	ARANDELA SUSPENSIÓN 15X8.1X0.1 / SHIM 15X8.1X0.1			BE250114238	3
33A	ARANDELA SUSPENSIÓN 19X8.1X0.1 / SHIM 19X8.1X0.1			BE250114239	2
33B	ARANDELA SUSPENSIÓN 17X8.1X0.1 / COMPRESSION DAMPING WASHER			BE250114240	2
33C	ARANDELA SUSPENSIÓN 21X8.1X0.1 / REED VALVE			BE250114241	4
34	VÁLVULA BASE / NUT			BE250114126	2
35	CASQUILLO INTERIOR BOTELLA / LOWER BUSH			BE250114128	2
36	TORNILLO 6X30 DIN 6921 8.8 / SCREW 6X30			BE250114144	4
37	GRUPO AMORTIGUADOR / VALVE UNIT			BE250514124	2
38	TORNILLO BL. VÁLVULA / VALVE SCREW			BE250514244	2
39	JUNTA 22X8.1X0.3 C72 BLU / SHIM 22X8.1X0.3			BE250514235	2
40	TÓRICA 2087 D21.95 S1.78 / O`RING 2087			BE250114246	2
41	PISTÓN D.26 SINTER. / COMPRESSION PISTON			BE250514247	2
42	JUNTA 15X8.1X0.2 / COMPRESSION DAMPING WASHER			BE250114248-1 (19X8.1X0.1)	3
42A	JUNTA 19X8.1X0.1 / SHIM 19X8.1X0.1			BE250114248-3 (17X8.1X0.1)	2
42B	JUNTA 17X8.1X0.1 / COMPRESSION DAMPING WASHER			BE250514248-5 (11X8.1X0.1)	2
42C	JUNTA 16X8.1X0.2 / SHIM 16X8.1X0.2			BE250514248-6 (13X8.1X0.2)	2
42D	JUNTA 11X8.1X0.1 / SHIM 11X8.1X0.1			BE250514248-7 (14X8.1X0.2)	2
42E	JUNTA 13X8.1X0.2 / SHIM 13X8.1X0.2			BE120514248 (15X8.1X0.15)	2
42F	JUNTA 14X8.1X0.2 / SHIM 14X8.1X0.2			BE120514248-1 (16X8.1X0.15)	2
43	VÁLVULA DE AJUSTE / ADJUSTING VALVE			BE250514249	2
44	CTO. TAPÓN REGULACIÓN / PLUG UNIT			BE250514105	2
45	TÓRICA 2100 D25.1 S1.78 / O'RING 2100			BE250114250	2
47	CTO. SUSPENSIÓN DELANTERA MARZOCCHI / MARZOCCHI FRONT SUSP.			BE200001210	1
48	JUEGO PROTEC. HORQUILLA INVERTIDA / REV. FORK PROT. SET			BE946002511	1
52	TORNILLO ESPECIAL 6X16 8.8 ZINCADO / 6X16 8.8 SPECIAL SCREW			T0805020	2
53	TORNILLO ESPECIAL 6X12 / 6X12 SPECIAL SCREW			T0316013	6

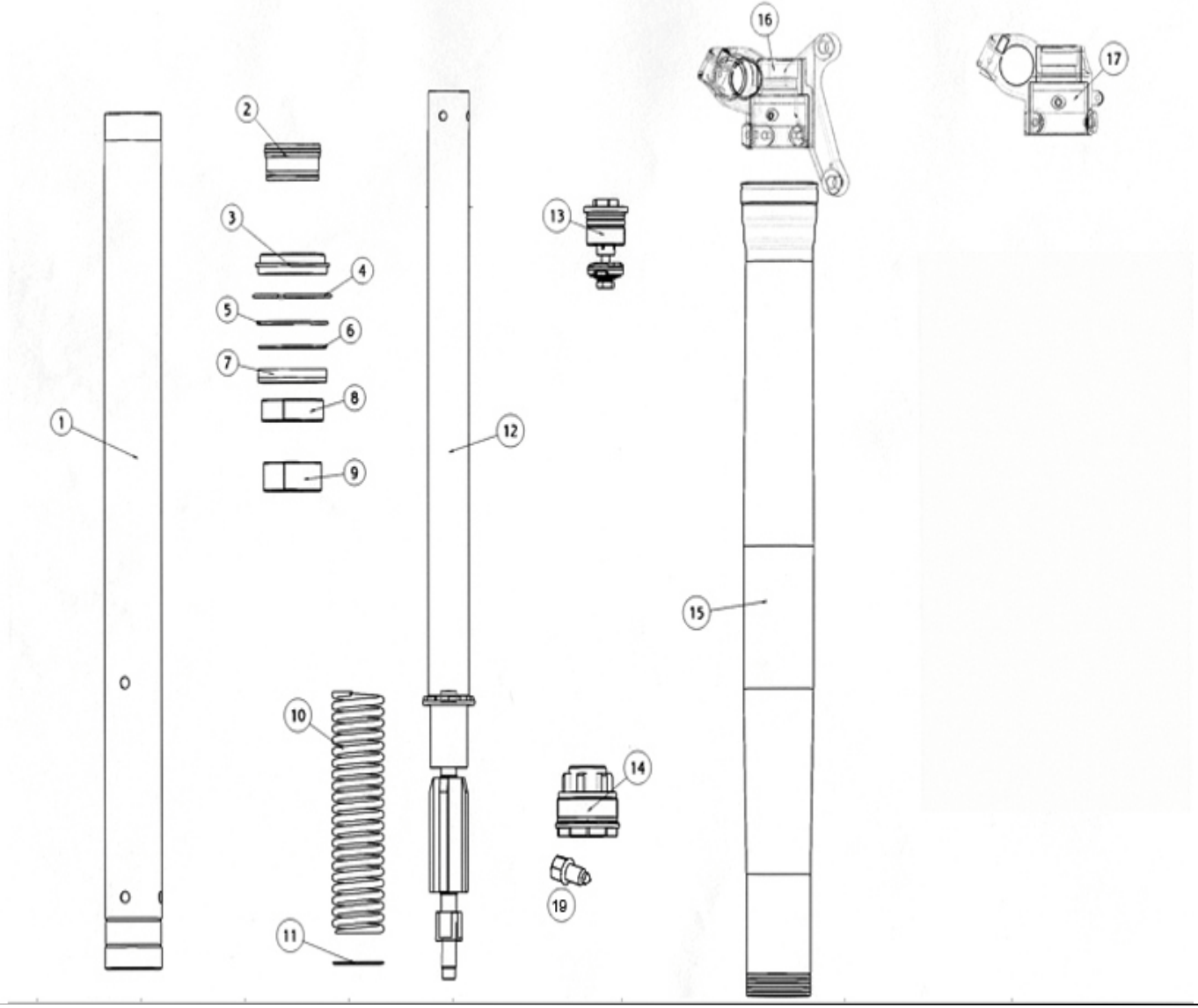
1
2
3
4
5
6
7
8
9
10
11
12
13
14
15
16
17
18

Nº	DESCRIPCION / DESCRIPTION	SACHS	SACHS RACING	Cant.
1	BARRA SUSPENSION / FRONT FORK INNER TUBE	BE201852509		2
2	CASQUILLO INTERMEDIO MAS TORICA / BUSHING WITH O-RING	BE200552509		2
3	GUARDAPOLVO /DUSTSEAL	BE200502509		2
4	SEEGER 64,5 / SEEGER 64,5	BE200352509		2
5	SEEGER 58,45 /SEEGER 58,45	BE200402509		2
6	ARANDELA ESPESOR / DISTANCERWASHER	BE200202509		2
7	RETEN / FORK OIL SEAL	BE203702509		2
8	CASQUILLO FRICCION 52/48 L15 / BUSCHING DU 52/48 L15	BE200252509		2
9	CASQUILLO FRICCION 49/47 L20 / BUSCHING DU 49/47 L20	BE200302509		2
10	MUELLE / SPRING	BE201702509	BE20170RC2509	2
11	ARANDELA /WASHER	BE200652509		2
12	CTO. HIDRAULICO EXTENSION / REBOUND HIDRAULIC SET	BE200602509	BE20060RC2509	2
13	TAPON REGULADOR COMPRESION /COMPRESSION REGISTER SET	BE201252509	BE20125RC2509	2
14	CTO. TAPON MAS REGULADOR EXTENSION / CAP SET WITH PRELOAD AJUST.	BE201302509	BE20130RC2509	2
15	TUBO EXTERIOR ALUMINIO / ALUMINIUM BUTER TUBE	BE201002509		2
16	PUNTERA IZQ. CON SOPORTE FRENO / LEFT AXLE CLAMP WTH BRAKE BRAKET	BE201102509		1
17	PUNTERA DRCH. / RIGHT AXLE CLAMP	BE201202509		1
--	SUSPENSION COMPLETA	BE200002511		1
19	TORNILLO REGULADOR CON TÓRICA	BE201402509		