EC 2T 250c.c.-300c.c.

E-START

DESPIECE / PART LIST

2012

GASGAS

250cc. / 300cc.

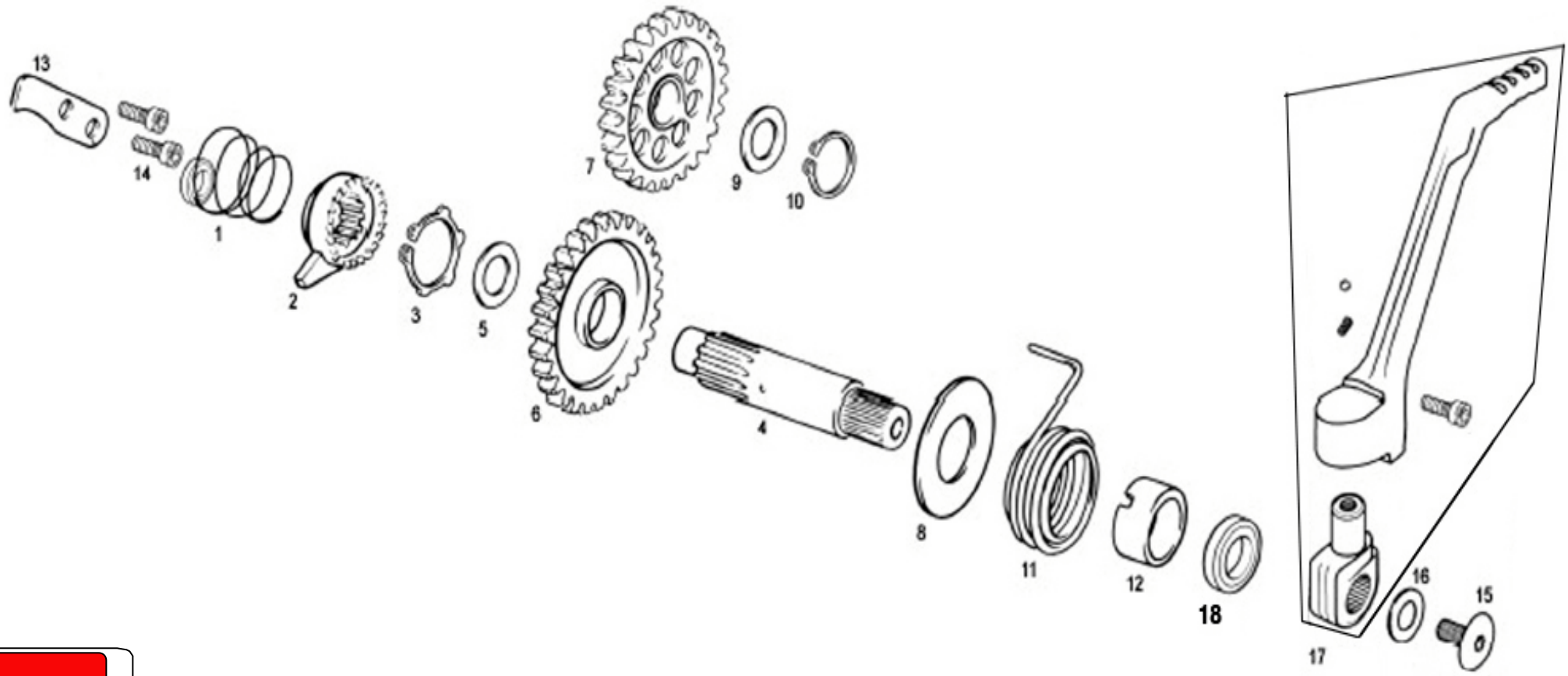

Nº	DESCRIPCION / DESCRIPTION	250/300	Cant
1	MUELLE TRINQUETE ARRANQUE / RATCHET PINION SPRING	ME25636006	1
2	TRINQUETE ARRANQUE / KICKSTART RATCHET PINION	ME120126004	1
3	SEEGER DE 20 ARRANQUE / START SEEGER 20	ME25636052	1
4	EJE ARRANQUE / KICKSTARTER SHAFT	ME250126003	1
5	ARANDELA TOPE 27X20,2X1 DESP. ARRANQUE / END WASHER 27X20.2X1	ME25636000	1
6	PIÑÓN ARRANQUE / STARTING PINION	ME250126002	1
7	PIÑÓN INTERMEDIO ARRANQUE / KICKSTART INNER PINION	ME880002508	1
8	ARANDELA ARRANQUE 20X40X1 / KICKSTART WASHER 20X40X1	ME25636051	1
9	ARANDELA PIÑÓN ARRANQUE 24X15,15X0,8 / WASHER 24.15.15X0.8	ME25636012	1
10	SEEGER EJE 15 EMBRAGUE / CLUTCH AXLE SEEGER 15	ME25632017	1
11	MUELLE ARRANQUE / KICKSTART SPRING	ME25636007	1
12	CASQUILLO CENTRADOR MUELLE ARRANQUE / KICKSTART SPRING BUSHING	ME250136053	1
13	PLATINA TRINQUETE ARRANQUE / KICKSTART RATCHET BRACKET	ME25636005	1
14	ALLEN 5X15 / ALLEN BOLT 5X15	T0305015	2
15	TORNILLO 6X12 CABOTA TORK / TORK SCREW 6X12	T0316012	1
16	ARANDELA 6X20X1.5 / WASHER 6X20X1.5	T4006020	1
17	CONJUNTO PEDAL ARRANQUE / KICK START	ME89000CT2511	1
18	RETÉN PEDAL ARRANQUE 20X30X7 / KICKSTART PEDAL SEAL 20X30X7	ME25632021	1

250cc. / 300cc.

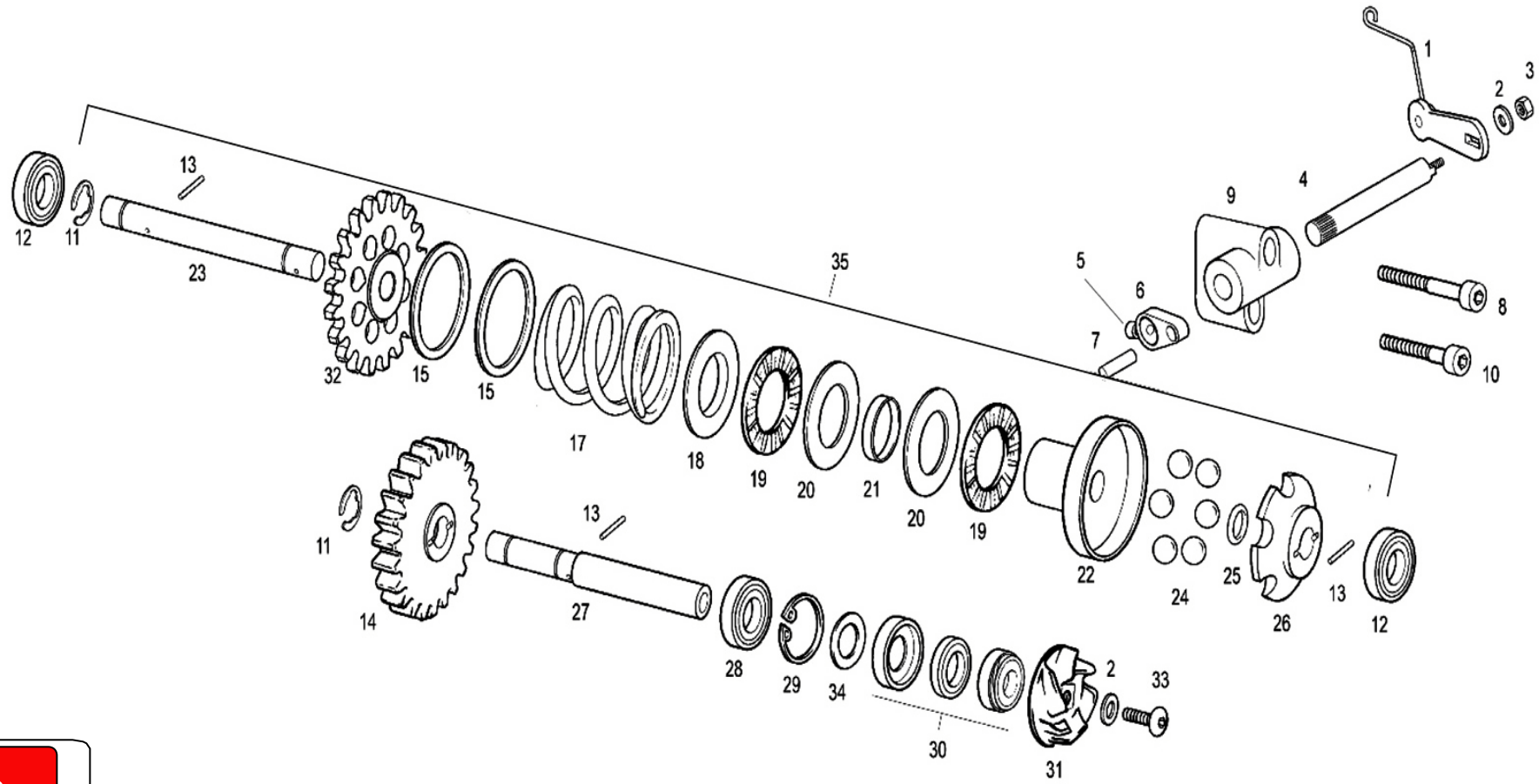
1
2
3
4
5
6
7
8
9
10
11
12
13
14
15
17
18
19
20
21
22
23
24
25
26
27
28
29
30
31
32
33
34
35

Nº	DESCRIPCION / DESCRIPTION	250/300	Cant
1	CTO. PALANCA VARILLA / STICK LEVER SET	ME73000CT3010	1
2	ARANDELA 5X12X1,5 / WASHER 5X12X1,5	T4005012	2
3	TUERCA AUTOBLOCANTE M5 / SELF-LOCKING NUT M5	T2105000	1
4	EJE PALANCA CENTRÍFUGO / IMPELLER LEVER AXLE	ME25616011	1
5	ALLEN 5X6 / ALLEN BOLT 5X6	T0305006	1
6	PALANCA SALIDA CENTRÍFUGO / IMPELLER OUTER LEVER	ME25616009	1
7	AGUJA 4X15,8 VÁLVULA ESCAPE / EXHAUST VALVE NEEDLE 4X15.8	ME25616037	1
8	ALLEN 6X50 / ALLEN BOLT 6X50	T0306050	1
9	SOPORTE EJE MANDO VÁLVULA / VALVE AXIS SUPPORT	ME25616025	1
10	ALLEN 6X35 / ALLEN BOLT 6X35	T0306035	1
11	SEEGER DIN.6799E7 / SEEGER DIN6799E7	ME25616024	2
12	RODA EJE CENTRÍFUGO Y BOMBA / WATER PUMP AXIS BEARING	ME25616032	2
13	RODILLO 3X14 BOMBA AGUA CENTRÍFUGO / IMPELLER WATER PUMP NEEDLE 3X14	ME25616028	3
14	PIÑÓN BOMBA AGUA / WATER PUMP PINION	ME25610005	1
15	VOL. REGL. M VALV. ESC 31,5X22,5X0,2 / WASHER EXHAUST VALVE 31.5X22.5X0.2	ME25616076	2
17	MUELLE CENTRÍFUGO VÁLVULA ESCAPE 99 / EXHAUST VALVE SPRING 99	ME25916026	1
18	ARANDELA CENTRAJE MUELLE CENTRÍFUGO / IMPELLER SPRING WASHER	ME25616029	1
19	JAULA AGUJA VÁLVULA ESCAPE / EXHAUST VALVE NEEDLES BEARING	ME25632046	2
20	PLACA AGUJA RODAMIENTO BOLET Y VÁLVULA ESCAPE / PLAIN WASHER	ME25632016	2
21	SEPARADOR COJINETE CENTRÍFUGO / SPACER	ME25616008	1
22	CAMPANA CENTRÍFUGO / IMPELLER CAP	ME25616007	1
23	EJE CENTRÍFUGO / IMPELLER AXLE	ME25616005	1
24	BOLA CENTRÍFUGO EMB. DE 8M/M / IMPELLER BALLS 8MM	ME25616033	6
25	TÓRICA 6X2 EJE CENTRAJE VÁLVULA ESCAPE / O'RING 6X2	ME25616045	1
26	ESTRELLA CENTRÍFUGO 6 BOLAS / 6-BALL RETAINER	ME25916006	1
27	EJE PIÑÓN BOMBA AGUA / WATER PUMP PINION AXIS	ME25610006	1
28	RODAMIENTO BOMBA AGUA / WATER PUMP BEARING	ME25610010	1
29	SEEGER INT. 26 BOMBA AGUA / WATER PUMP SEEGER 26	ME25636065	1
30	RETÉN BOMBA AGUA / WATER PUMP SEAL	ME25610011	1
31	TURBINA BOMBA AGUA / WATER PUMP IMPELLER	ME25610007	1
32	PIÑÓN CENTRÍFUGO / IMPELLER PINION	ME580012511	1
33	ULS 6X16 PL. PRIM, GUAR, FIL. / ULS BOLT 6X16	T0506016	1
34	ARANDELA 25,8X17,5X05 BOMBA AGUA / WASHER 25,8X17,5X05 WATER PUMP	M03625000	1
35	CENTRÍFUGO COMPLETO / IMPELLER SET	ME250416005CT	1

250cc. / 300cc.

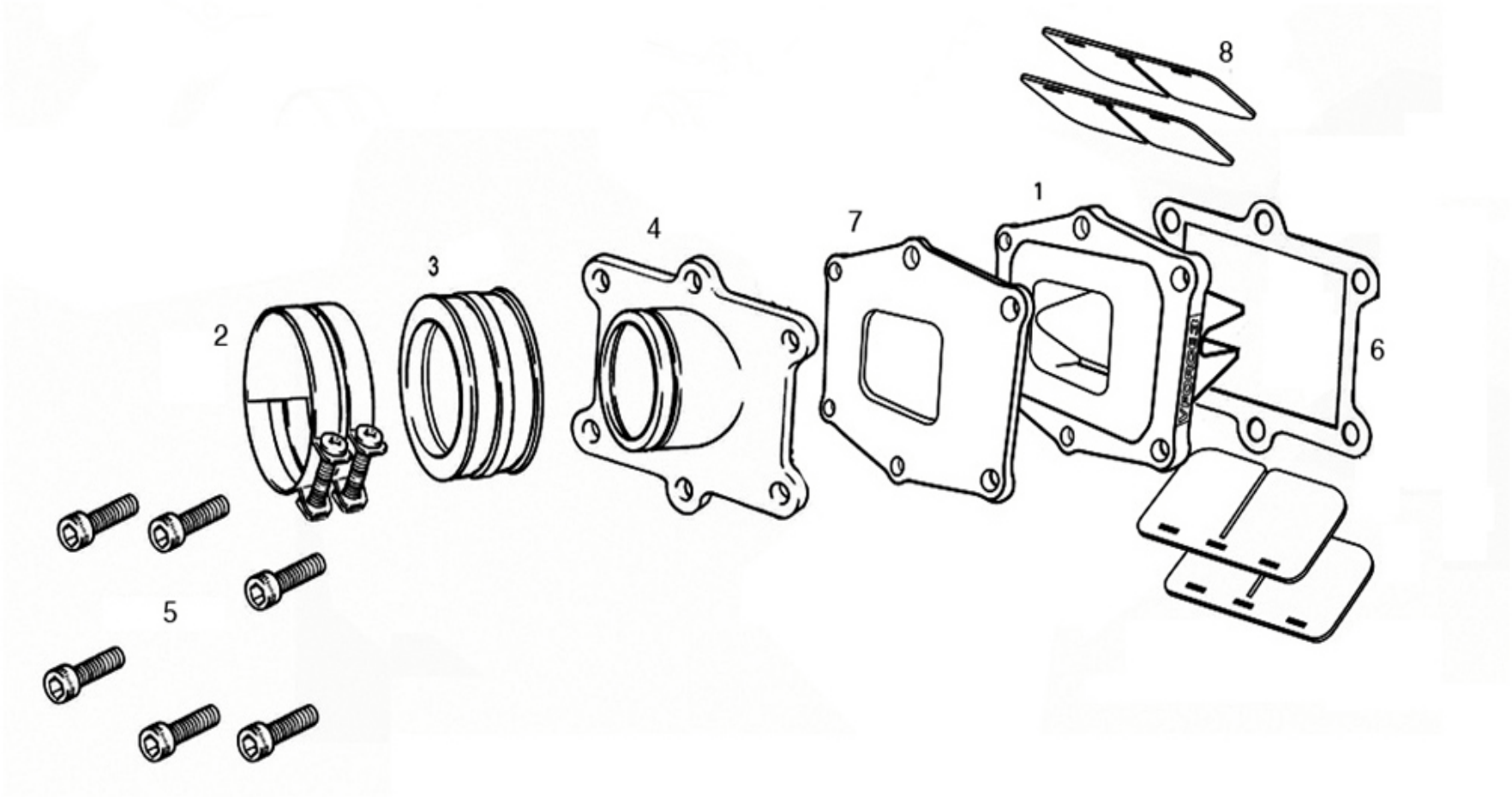

Nº	DESCRIPCION / DESCRIPTION	250/300	Cant
1	CTO. CAJA DE LAMINAS / REED VALVE ASSEMBLY	ME250616021	1
2	ABRAZADERA CAJA LÁMINAS / REED VALVE CLAMP	MT280316132	2
3	GOMA CAJA DE LÁMINAS / REED VALVE RUBBER	ME250616131	1
4	TUBERA EURO 3 / EURO 3 REED VALVE RUBBER	ME250816135	1
5	TORNILLO ESPECIAL 6X25 / SPECIAL BOLT 6X25	T0206025	6
6	JUNTA CAJA LÁMINAS CÁRTER / CRANKCASE REED VALVE GASKET	ME250644005	1
7	JUNTA CAJA LÁMINAS TUBERA / RUBBER REED VALVE GASKET	ME250644105	1
8	JUEGO LÁMINAS ADMISIÓN / REED VALVE SET	ME250616041	2

250cc. / 300cc.

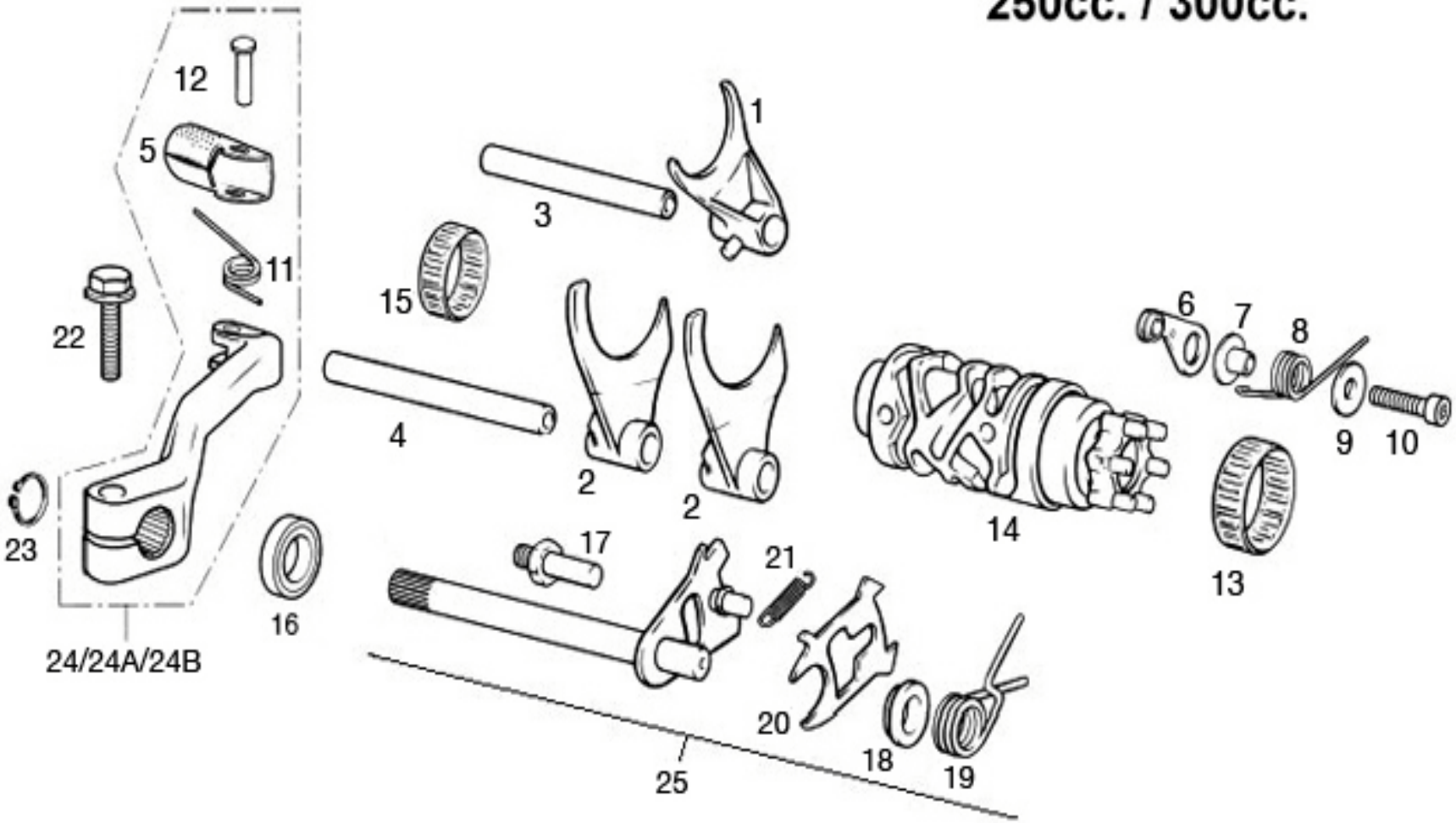

Nº	DESCRIPCION / DESCRIPTION	250 / 300	Cant
1	HORQUILLA 5-6 / SHIFT FORK 5-6	ME25636009	1
2	HORQUILLA 1-2-3-4 / SHIFT FORK 1-2-3-4	ME25636008	2
3	EJE HORQUILLA CORTO / SHORT FORK AXIS	ME25636045	1
4	EJE HORQUILLA LARGO / LONG FORK AXIS	ME25636044	1
5	PUNTERA PEDAL CAMBIO / GEAR LEVER END	ME25636027	1
6	FIJADOR MARCHAS / GEAR FASTEN	ME250036033	1
7	CASQUILLO. PLATINA FIJADOR MARCHAS / GEAR BUSHING	ME25636047	1
8	MUELLE FIJADOR MARCHAS / GEAR FASTEN SPRING	ME250036034	1
9	ARANDELA PLANA 6X16X1,5 / PLANE WASHER 6X16X1.5	T4006016	1
10	ALLEN 6X25X8.8 / ALLEN BOLT 6X25X8.8	T0306025	1
11	MUELLE PUNT. PEDAL CAMB. / GEAR LEVER END SPRING	ME25636029	1
12	PASADOR PUNT. PEDAL 6X18 / LEVER END PIN 6X18	ME25636030	1
13	RODAMIENTO DESMODRÓMICO HK3512 / SHIFT CAM BEARING	ME25636054	1
14	DESMODRÓMICO / SHIFT CAM	ME250536031	1
15	RODAMIENTO DESMODRÓMICO HK2512 / SHIFT CAM BEARING	ME25636055	1
16	RETÉN SELECTOR 12-22-7 / SEAL 12-22-7	ME25636048	1
17	TORN. CENTR. MUELLE SELECT. / SELECTOR SPRING SCREW	ME25636042	2
18	DOLLA CENTRADOR ESCORPIÓN / SCORPION CENTRER	ME250236041	1
19	MUELLE SELECTOR / SELECTOR SPRING	ME25636035	1
20	ESCORPIÓN / SCORPION	ME250236036	1
21	MUELLE ESCORPIÓN / SCORPION SPRING	ME25636039	1
22	HEXAGONAL 6X20 CON ARANDELA / 6X20 HEXAGONAL WITH WASHER	T0206020	1
23	SEEGER 12X1 EXT. EJE SELECTOR / SEEGER 12X1	ME25636043	1
24	CTO. PEDAL CAMBIO / GEAR LEVER SET	ME120336026	1
24A	CTO. PEDAL CAMBIO ROJO / RED GEAR LEVER SET	ME120336026R	1
24B	CTO. PEDAL CAMBIO ORO / GOLD GEAR LEVER SET	ME120336026G	1
25	EJE SELECTOR COMPLETO EC250 / EC250 SELECTOR AXIS COMPLETE	ME250236038CT	1

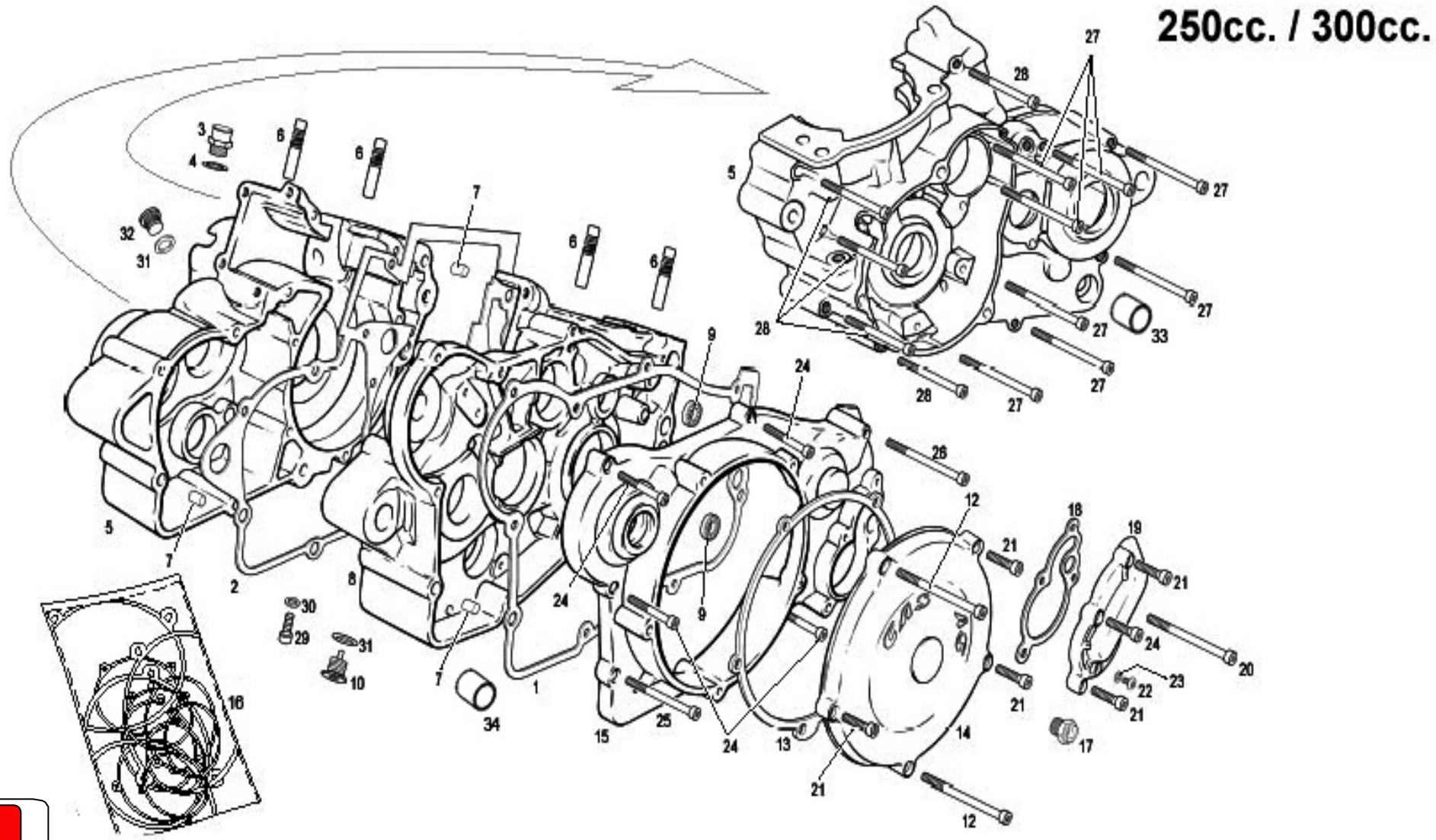
250cc. / 300cc.

Nº	DESCRIPCION / DESCRIPTION	250/300	Cant
1	JUNTA TAPA EMBRAGUE / CLUTCH COVER GASKET	ME25644002	1
2	JUNTA CARTER CENTRAL / CENTRAL CRANKCASE GASKET	ME90000013012	1
3	RACORD ENTRADA AGUA / WATER INLET VALVE	ME25610013	1
4	ARANDELA FIBRA 14X20X2 RACORD ENTR. AGUA / FIBER WASHER	ME25610014	1
5	CÁRTER IZQUIERDO / LEFT CRANKCASE	ME110002511	1
6	ESPÁRRAGO CILINDRO / CYLINDER PIN	ME25616023	4
7	CASQUILLO CENTRADOR CARTER / CRANKCASE BUSHING	ME25610018	6
8	CÁRTER DERECHO / RIGHT CRANKCASE	ME100002511	1
9	RODAMIENTO EJE CENTRÍFUGO Y BOMBA / WATER PUMP BEARINGS	ME25616032	2
10	TAPÓN VACIADO ACEITE CON IMÁN / MAGNETIC OIL DRAIN PLUG	ME25610017	1
12	TORNILLO ESPECIAL 6X75 / SPECIAL BOLT 6X75	T0206075	2
13	JUNTA TAPA DISCOS DIAM. 8 / DISCS COVER GASKET 8MM	ME25644003	1
14	TAPA DISCOS EMBRAGUE / DISCS CLUTCH COVER	ME15000003011	1
15	TAPA EMBRAGUE / CLUTCH COVER	ME650002510	1
16	KIT JUNTAS / GASKET KIT	ME250544100	1
17	VISOR NIVEL ACEITE / OIL LEVEL PLUG	ME25610015	1
18	JUNTA TAPA BOMBA AGUA / WATER PUMP COVER GASKET	ME25944008	1
19	TAPA BOMBA AGUA / WATER PUMP COVER	ME570002510	1
20	TORNILLO ESPECIAL 6X80 CARTER / SPECIAL BOLT 6X80	T0206080	1
21	TORNILLO 6X25 TAPA EMBRAGUE / SPECIAL BOLT 6X25	T0206025	6
22	ULS 6X10 / ULS BOLT 6X10	T0506010	1
23	ARANDELA FIBRA 6X10X1,5 / FIBER WASHER 6X10X1.5	T4006010	1
24	TORNILLO ESPECIAL 6X30 / SPECIAL BOLT 6X30	T0206030	4
25	TORNILLO ESPECIAL 6X35 / SPECIAL BOLT 6X35	T0206035	1
26	TORNILLO ESPECIAL 6X55 / SPECIAL BOLT 6X55	T0206055	1
27	ALLEN 6X70 / ALLEN BOLT 6X70	T0306070	8
28	ALLEN 6X60 / ALLEN BOLT 6X60	T0306060	5
29	ALLEN 8X14 / ALLEN BOLT 8X14	T0308014	1
30	ARANDELA COBRE 8X12X1 / COPPER WASHER 8X12X1	T4008012	1
31	TÓRICA12X2 TAPÓN ACEITE / OIL CAP O'RING 2X2	MT280410030	2
32	TAPÓN LLENADO ACEITE / OIL FILL PLUG	M01016002	1
33	GLACIER 1512	C200101	1
34	GLACIER 1212	BE25610009	1

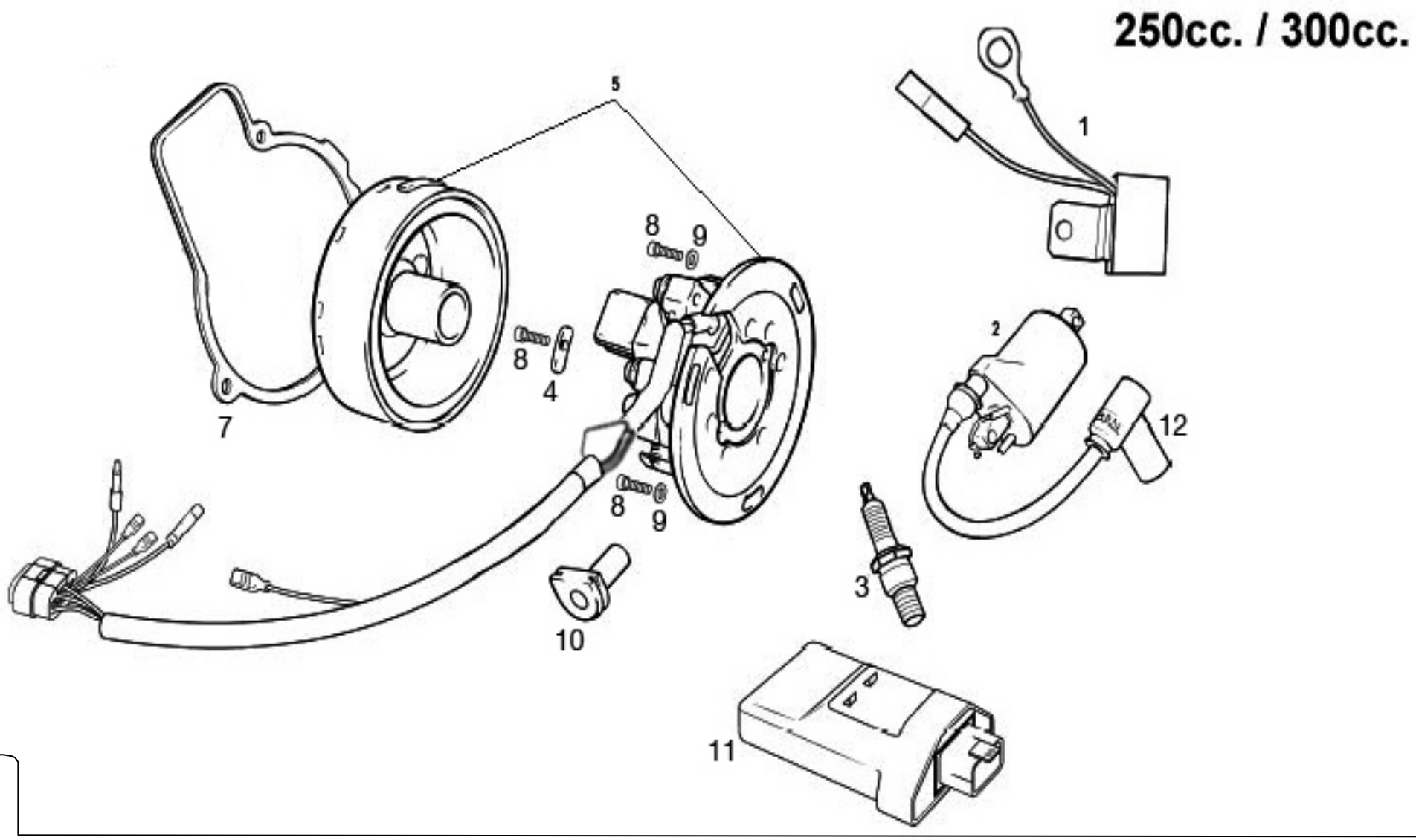
250cc. / 300cc.
1
2
3
4
5
7
8
9
10
11
12

Nº	DESCRIPCION / DESCRIPTION	250/300	Cant
1	REGULADOR ALTERNADOR / ALTERNATOR REGULATOR	L300031	1
2	BOBINA / IGNITION COIL	ME250434006	1
3	BUJÍA / SPARK PLUG	ME25934000	1
4	CENTRAJE ENCENDIDO / IGNITION CENTRER	ME25934025	1
5	VOLANTE MAG. KOKUSAN FP-8009 MULTISPARK / FP-8009 IGNITION COMP.	EE10000033012	1
6	TAPA ENCENDIDO PLÁSTICO / PLASTIC IGNITION COVER	ME250510004	1
7	JUNTA TAPA VOLANTE / IGNITION COVER GASKET	ME250544004	1
8	ALLEN 5X20 / ALLEN BOLT 5X20	T0305020	3
9	ARANDELA PLANA 5X12X1,5 / PLAIN WASHER 5X12X1.5	T4005012	3
10	TAPÓN GOMA ENCENDIDO / IGNITION RUBBER CAP	ME25934014	1
11	CDI / CDI	ME250634007	1
12	PIPA BUJÍA / SPARK PLUG CAP	BE25934000	1

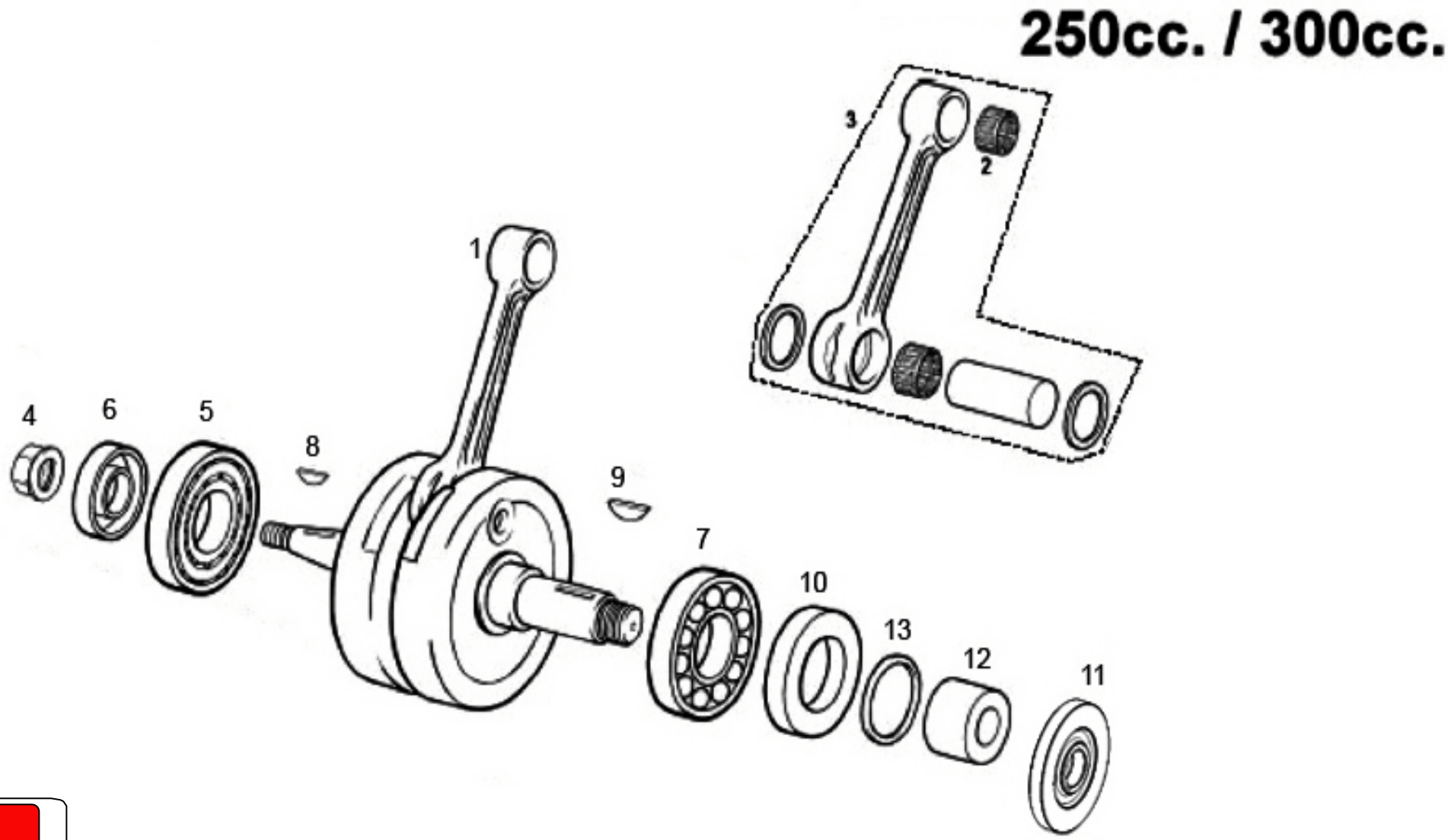
250cc. / 300cc.
1
2
3
4
5
6
7
8
9
10
11
12
13

Nº	DESCRIPCION / DESCRIPTION	250/300	Cant
1	CTO. CIGÜEÑAL / CRANKSHAFT ASSEMBLY	ME30000CT3011	1
2	RODAMIENTO 18X22X22 PIE BIELA / ROD BEARING	ME25616035	1
3	CTO. BIELA / ROD SET	ME25612100	1
4	TUERCA VOLANTE MAGNETICO / ROTOR NUT	ME700102510	1
5	RODAMIENTO 6206 CIGÜEÑAL / 6206 CRANKSHAFT BEARING	ME310002508	1
6	RETÉN LADO IZQUIERDO CIGUEÑAL / LEFT SIDE CRANK SHAFT SEAL	ME250112009	1
7	RODAMIENTO 63/28 CIGÜEÑAL (DER.) / 63/28 CRANKSHAFT BEARING (RIGHT SIDE)	ME310012508	1
8	CHAVETA VOLANTE / IGNITION KEY	ME25634016	1
9	CHAVETA CIGÜEÑAL / CRANKSHAFT KEY	ME25612010	1
10	RETÉN LADO DERECHO CIGÜEÑAL / RIGHT SIDE CRANK SHAFT SEAL	ME250112008	1
11	INERCIA VOLANTE / IGNITION INERTIA	MX25812017	1
12	CASQUILLO CIGÜEÑAL / CRANK SHAFT BUSHING	ME250112014	1
13	TÓRICA CIGÜEÑAL / CRANK SHAFT O'RING	ME250112011	1

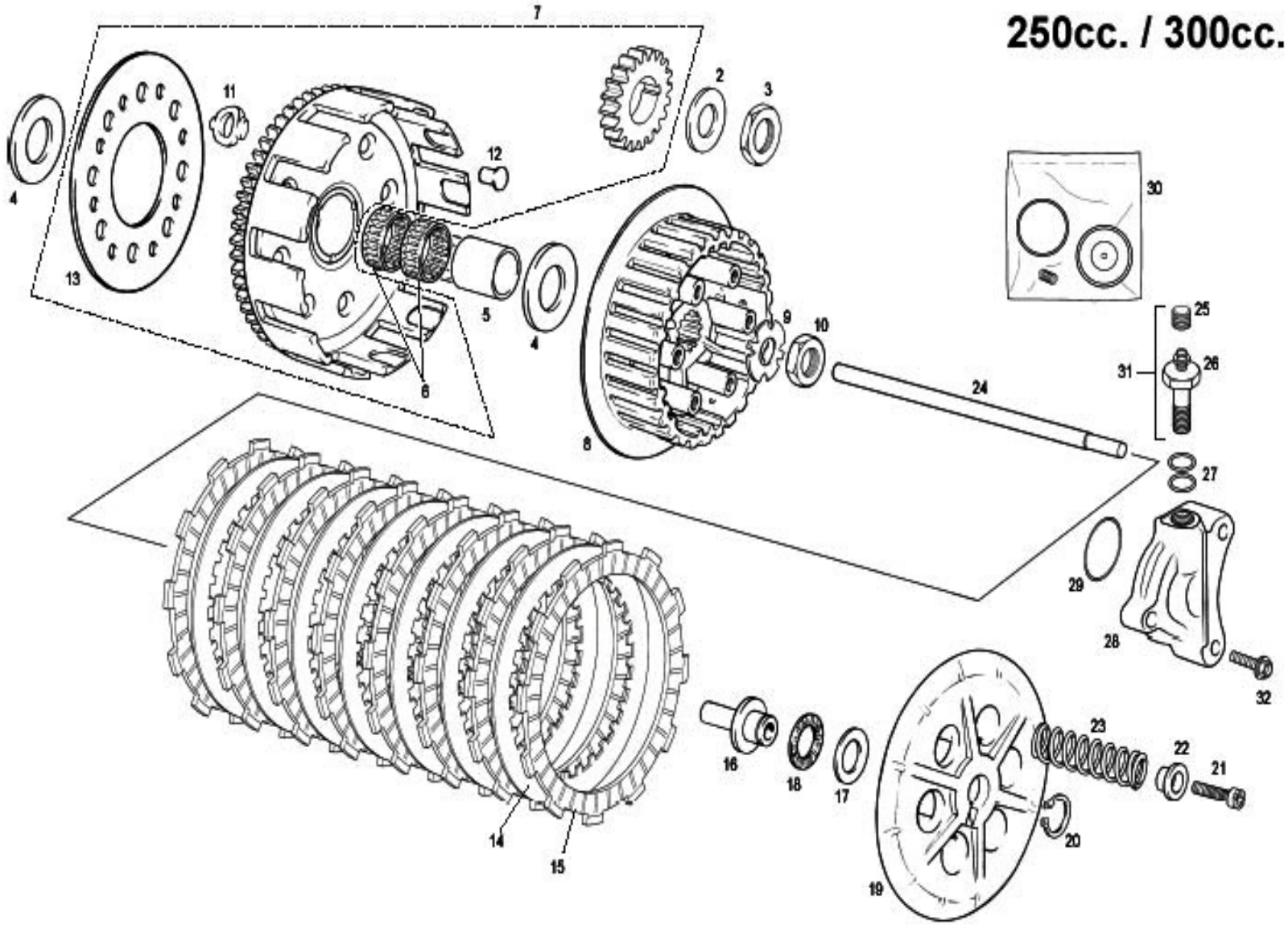
250cc. / 300cc.
7
11
2
3
12
4
13
5
4
6
30
25
9
10
31
26
24
8
27
29
28
32
16
18
17
23
22
21
20
19
14
15

Nº	DESCRIPCION / DESCRIPTION	250/300	Cant
2	ARANDELA BISELADA DE. 20/125 / WASHER 20/125	ME25632019	1
3	TUERCA BLOCAJE PIÑÓN CIGÜEÑAL / CRANK SHAFT PINION LOCKING NUT	ME250032018	1
4	ARANDELA CAMPANA EMBRAGUE 22,1X42X2,8 / WASHER 22.1X42X2.8	ME25632011	2
5	CASQUILLO CAMPANA EMBRAGUE / PRIMARY DRIVEN GEAR BUSHING	ME25632012	1
6	COJINETE CAMPANA EMBRAGUE / PRIMARY DRIVEN GEAR BEARING	ME25632029	2
7	CTO. CORONA CAMPANA EMBRAGUE / PRIMARY DRIVEN GEAR SET	ME250432003CT	1
8	CUBO EMBRAGUE / CLUTCH BOSS	ME25632005	1
9	ARANDELA PRECINTO EMBRAGUE / CLUTCH LOCK WASHER	ME25632022	1
10	TUERCA FIJ. CUBO EMBRAGUE / CLUTCH BOSS NUT	ME25632028	1
11	GOMA SILENBLOCK / SILENBLOCK RUBBER	ME20932008	8
12	REMACHES CAMPANA EMBRAGUE / PRIMARY DRIVEN GEAR RIVETS	ME250132010	8
13	ARANDELA CORONA EMBRAGUE / CLUTCH BOSS WASHER	ME20932009	1
14	DISCO EMBRAGUE HIERRO / IRON CLUTCH DISK	ME25632037	7
15	DISCO EMBRAGUE FORRADO / COVERED CLUTCH DISK	ME25632007	8
16	BOLET EMBRAGUE / CLUTCH PIN	ME20000013011	1
17	PLACA AGUJA Y VALV. ESCAPE / EXHAUST PIN WASHER	ME25632016	1
18	JAULA AGUJA VALV. ESCAPE / NEEDLES BEARING	ME25632046	1
19	PRENSA EMBRAGUE / PRESSURE PLATE	ME20000003011	1
20	SEEGER EJE 15 EMBRAGUE / CLUTCH SEEGER AXLE 15	ME25632017	1
21	ALLEN 6X20 TA. EMBRAGUE,CART,SUSP. / ALLEN BOLT 6X20	T0306020	6
22	CASQ. MUELLE EMBRAGUE ALUMINIO / ALUMINIUM CLUTCH SPRING BUSHING	ME250032020	6
23	MUELLE EMBRAGUE / CLUTCH SPRING	ME25632015	6
24	VARILLA EMBRAGUE / CLUTCH ROD	ME25632040	1
25	TAPÓN SANGRADOR / BLEEDER CAP	BE25622055	1
26	SANGRADOR / BLEEDER	BE25622060	1
27	ARANDELA LATIGUILLO / HOSE WASHER	BE25622007	2
28	PINZA EMBRAGUE HIDRA. / HYDRAULIC CLUTCH CALIPER	ME25632026	1
29	TORICA BOMBA EMBRAGUE / CLUTCH PUMP O'RING	ME25632024	1
30	KIT REPARACIÓN PINZA EMBRAGUE / CLUTCH CALIPER REPARATION KIT	BE250622050	1
31	RACORD PINZA EMBRAGUE / RACORD CLUTCH CALIPER	M01060000	1
32	TORNILLO ESPECILA 6X20 / SPECIAL SCREW	T0206020	1

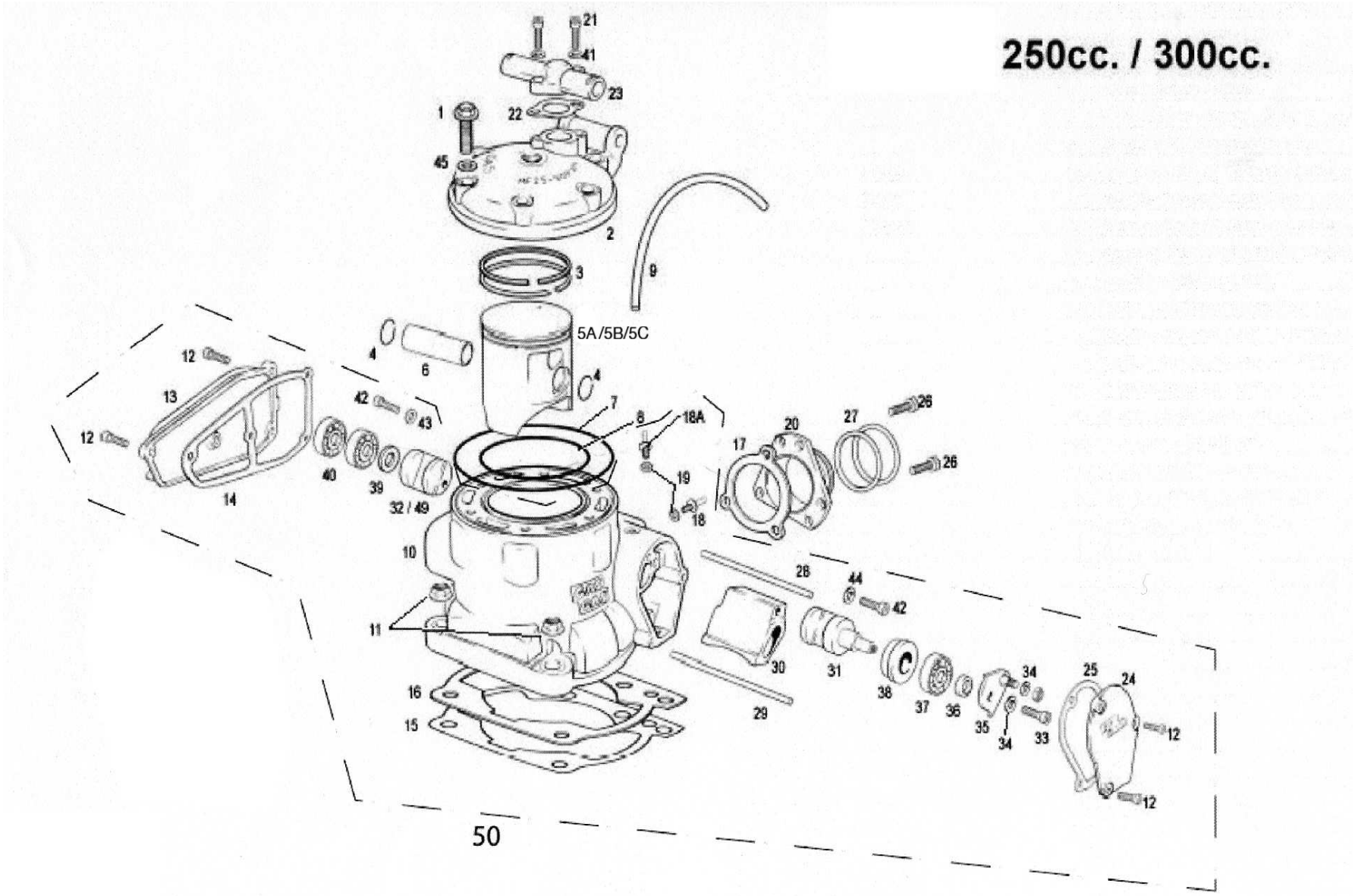
250cc. / 300cc.
21
41
23
1
22
45
2
3
9
5A/5B/5C
4
6
12
13
42
43
7
8
18A
20
27
26
17
19
18
40
39
32 / 49
14
10
28
44
42
11
30
31
38
37
36
35
34
33
25
24
16
15
29
50

Nº	DESCRIPCION / DESCRIPTION	250	300	Cant
1	ALLEN M8X35 / ALLEN M8X35	T0308035		6
2	CULATA / CYLINDER HEAD	ME250016000	ME300016000	1
3	JUEGO AROS PISTON / PISTON RINGS SET	ME25616040	ME30916040	1
4	CLIP BULÓN / PISTON PIN CLIPS	ME25616126		2
5A	PISTÓN / PISTON	ME25616020R	ME300416020	1
5B	PISTÓN TIPO B / B TYPE PISTON	ME25616121R	ME300416121	1
5C	PISTÓN TIPO C / C TYPE PISTON	ME25616122R	ME300416122	1
6	BULÓN PISTÓN / PISTON PIN	ME25616125		1
7	TÓRICA CULATA EXTERIOR / OUTER CYLINDER HEAD O'RING	ME25916060	ME25916060	1
8	TÓRICA CULATA INTERIOR / INNER CYLINDER HEAD O'RING	ME25916065	ME30916065	1
9	TUBO DESVAPORIZADOR CARTER / CARTER BREATH TUBE	ME25610022		1
10	CILINDRO / CYLINDER	ME25916022	ME300216022	1
11	TUERCA CILINDRO ESPECIAL 10/150 / CYLINDER NUT 10/150	M01613001		4
12	TORNILLO ESPECIAL 5X15 / SPECIAL BOLT 5X15	T0205015		7
13	TAPA VÁLVULA IZQUIERDA / LEFT VALVE COVER	ME25610003		1
14	JUNTA TAPA VÁLVULA IZQUIERDA / LEFT VALVE COVER GASKET	ME25644006		1
15	JUNTA CILINDRO 0,15 / CYLINDER GASKET 0.15	ME25644010		1
16	JUNTA CILINDRO 0,5 / CYLINDER GASKET 0,5	ME25644000		1
16A	JUNTA CILINDRO 0,3 / CYLINDER GASKET 0,3	ME25644009		1
17	JUNTA ESCAPE / EXHAUST GASKET	ME25644012		1
18	DESVAPORIZADOR DIAM. 0,5 / 0,5 DEVAP.	ME25710012		2
18A	DESVAPORIZADOR DIAM. 3 / 3 DEVAP.	ME25610012		2
19	ARANDELA FIBRA 6X10X1,5 / FIBER WASHER 6X10X1,5	T4006010		2
20	TUBERA ESCAPE / EXHAUST PIPE	ME250516019		1
21	ALLEN 6X20 / ALLEN BOLT 6X20	T0306020		3
22	JUNTA TAPA TERMOSTATO / THERMOSTAT COVER GASKET	ME250344011		1
23	TAPA TERMOSTATO / THERMOSTAT COVER	ME250316001		1
24	TAPA VÁLVULA DERECHA / RIGHT VALVE COVER	ME25610002		1
25	JUNTA TAPA VÁLV. DERECHA 1MM. / RIGHT VALVE COVER GASKET 1MM	ME25644007		1
26	TORNILLO M6 x 14 / SCREW M6 x 14	T0566014		3
27	TÓRICA TUBERA ESCAPE VITON 44X3 / EXHAUST PIPE O'RING 44X3	BE250526006		2
28	EJE VÁLVULA ESC. LARGO 93 MM. / LONG EXHAUST VALVE AXIS 93MM	ME25616027		1
29	EJE VÁLVULA ESC. CORTO 83 MM. / SHORT EXHAUST VALVE AXIS 83MM	ME25616017		1
30	VÁLVULA ESCAPE CENTRAL / CENTRAL EXHAUST VALVE	ME25616015		1

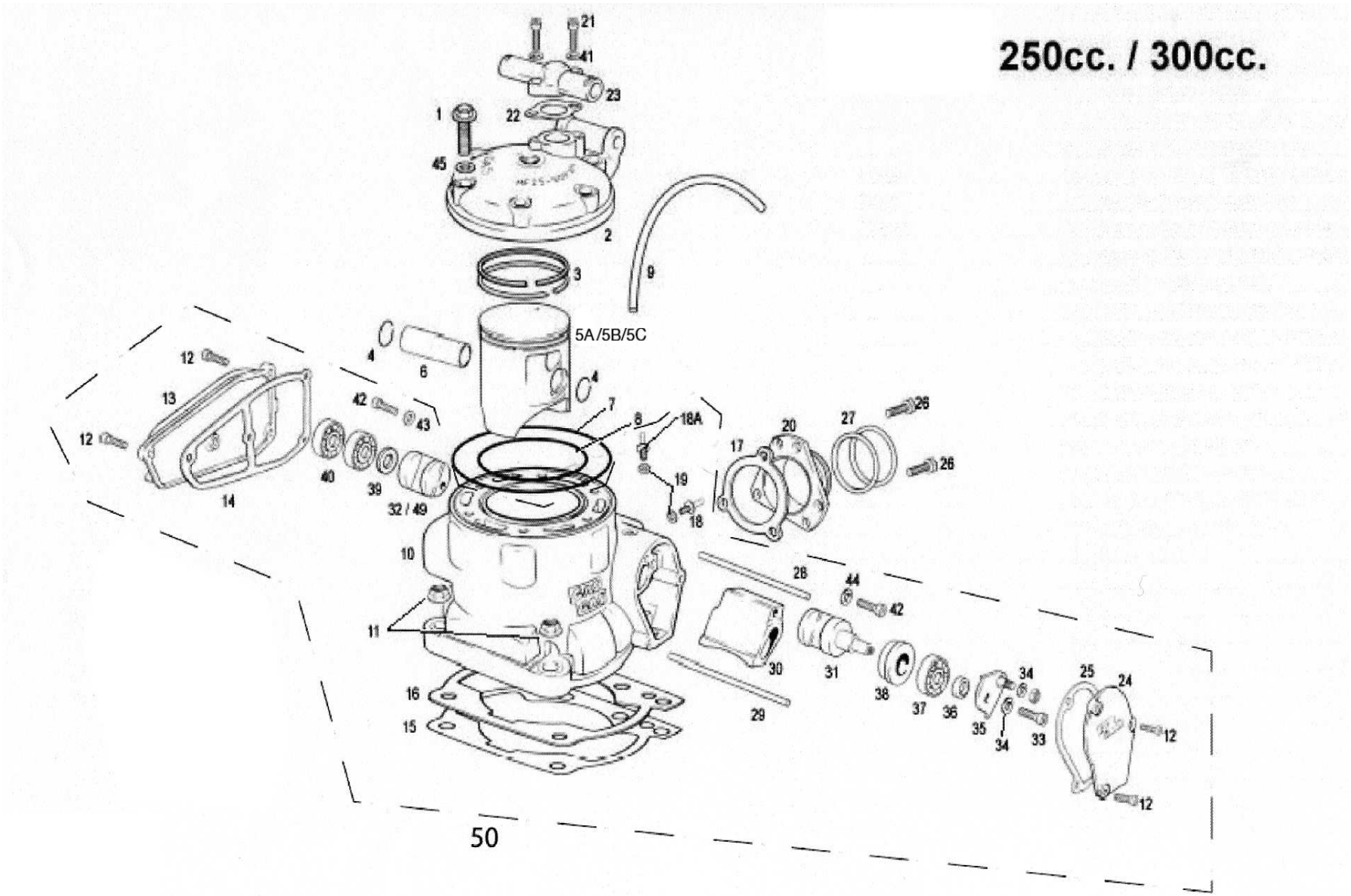
250cc. / 300cc.
5A/5B/5C
50

Nº	DESCRIPCION / DESCRIPTION	250	300	Cant
31	VÁLVULA ESCAPE DERECHA / RIGHT EXHAUST VALVE	ME25616016		1
32	VÁLVULA ESCAPE IZQUIERDA / LEFT EXHAUST VALVE	ME25616014		1
33	ALLEN 5x12 / ALLEN BOLT 5x12	T0305012		1
34	ARANDELA PLANA 5X12X1,5 / PLAIN WASHER 5X12X1.5	T4005012		2
35	CTO. PALANCA VÁLVULA ESCAPE / EXHAUST VALVE BRACKET SET	ME25616050		1
36	SEP. COJINETE VÁLV. ESC. / EXHAUST VALVE BEARING SPACER	ME25916048		1
37	RODAMIENTO BOMBA AGUA / WATER PUMP BEARING	ME25610010		1
38	DIST. COJINETE VÁLVULA ESCAPE / EXHAUST VALVE BEARING SPACER	ME25616036		1
39	ARANDELA DE 8X16X1,5 / WASHER 8X16X1.5	T4008016		1
40	RODAMIENTO EJE CENTRÍFUGO Y BOMBA / AXIS BEARING	ME25616032		2
41	ARANDELA COBRE 6X10X1,5 / 6X10X1,5 WASHER	ME25916002		2
42	ALLEN 6X10 / 6X10 ALLEN BOLT	T0306010		2
43	ARANDELA 6X18X1,5 / 6X18X1,5 WASHER	T4006018		1
44	ARANDELA 6X12X1,5 / 6X12X1,5 WASHER	T4006012		1
45	ARANDELA COBRE 8X12X1,5 / 8X12X1,5 WASHER	T4008012		6
49	VÁLVULA ESCAPE IZQ HOMOLOGADA / ACCREDITED LEFT EXHAUST VALVE	ME25616014H	ME25616014H	1
50	CONJUNTO CILINDRO / CYLINDER SET	ME25916022CT	ME300216022CT	1

250cc. / 300cc.

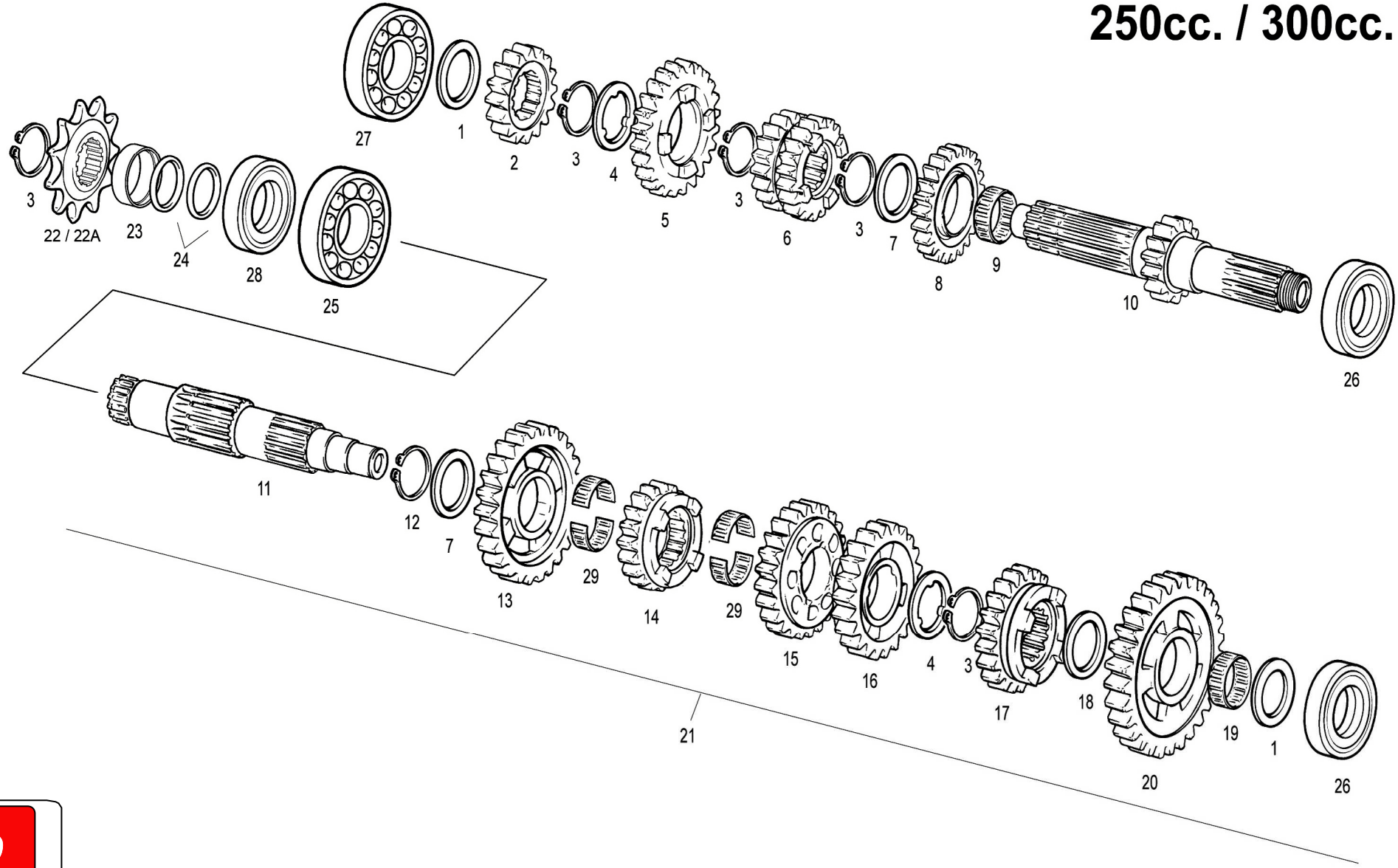
27
1
2
3
4
5
3
6
3
7
8
9
10
26
3
22 / 22A
23
24
28
25
11
12
7
13
29
14
29
15
16
4
3
17
18
19
1
20
26
21

Nº	DESCRIPCION / DESCRIPTION	250/300	Cant
1	ARANDELA 18X31,5X0,7 CAMBIO / SHIFT WASHER 18X31.5X0.7	ME25636014	2
2	PIÑÓN PRIMARIO II / PRIMARY GEAR II	ME25636071	1
3	CIRCLIP D.25 DIN 471 REBAJADO / CIRCLIP DIN 471	ME25936084	5
4	ARANDELA 31,5X1 ESTRIADA / LOCK WASHER 31.5X1	ME25636091	2
5	PIÑÓN PRIMARIO VI / PRIMARY GEAR VI	ME25636074	1
6	PIÑÓN PRIMARIO III Y IV / PRIMARY GEAR III & IV	ME25636072	1
7	ARANDELA 25,2X31,5X1 CAMBIO / SHIFT WASHER 25.2X31.5X1	ME25636017	2
8	PIÑON PRIMARIO V / PRIMARY GEAR V	ME25636073	1
9	COJINETE AGUJAS K25-29-10 / NEEDLES BEARING K25-29-10	M02616000	1
10	EJE PRIMARIO I / PRIMARY AXIS GEAR I	ME25636070	1
11	EJE SECUNDARIO / SECONDARY AXIS	ME410002508	1
12	CIRCLIP D.25 DIN.983 / CIRCLIP D.25 DIN	ME25636095	1
13	PIÑÓN SECUNDARIO II / SECONDARY GEAR II	ME25636077	1
14	PIÑÓN SECUNDARIO VI / SECONDARY GEAR VI	ME250136081	1
15	PIÑÓN SECUNDARIO III / SECONDARY GEAR III	ME25636078	1
16	PIÑÓN SECUNDARIO IV / SECONDARY GEAR IV	ME25636079	1
17	PIÑÓN SECUNDARIO V / SECONDARY GEAR V	ME25636080	1
18	ARANDELA 20,8X29X1 CAMBIO / SHIFT WASHER 20.8X29X1	ME25636016	1
19	ROD. AGUJ. K20X24X10 / NEEDLES BEARING K20X24X10	ME25636059	1
20	PIÑÓN SECUNDARIO I / SECONDARY GEAR I	ME25636076	1
21	GRUPO CAMBIO COMPLETO / SHIFT GEAR SET	ME40000CT2508	1
22	PIÑÓN SALIDA Z.13 / OUTER SPROCKET Z13	ME25636025	1
22A	PIÑÓN SALIDA Z.12 / OUTER SPROCKET Z12	MF25836025	1
23	DOLLA RETÉN SALIDA CAMBIO / SIFHT SEAL	ME25636046	1
24	TÓRICA 25X2 NBR PIÑ.SAL. / O'RING 25X2 NBR	ME25632025	2
25	RODAMIENTO CAMBIO 6305 / SHIFT BEARING 6305	ME25636058	1
26	RODAMIENTO CAMBIO 6203 / SHIFT BEARING 6203	ME25636057	2
27	RODAMIENTO CAMBIO 6205ZC3E / SHIFT BEARING 6205ZC3E	ME250136056	1
28	RETÉN / SEAL	ME25636024	1
29	JAULA AGUJAS KD22X25X9,8 / KD22X25X9,8 NEEDLES BEARING	ME250236102	2

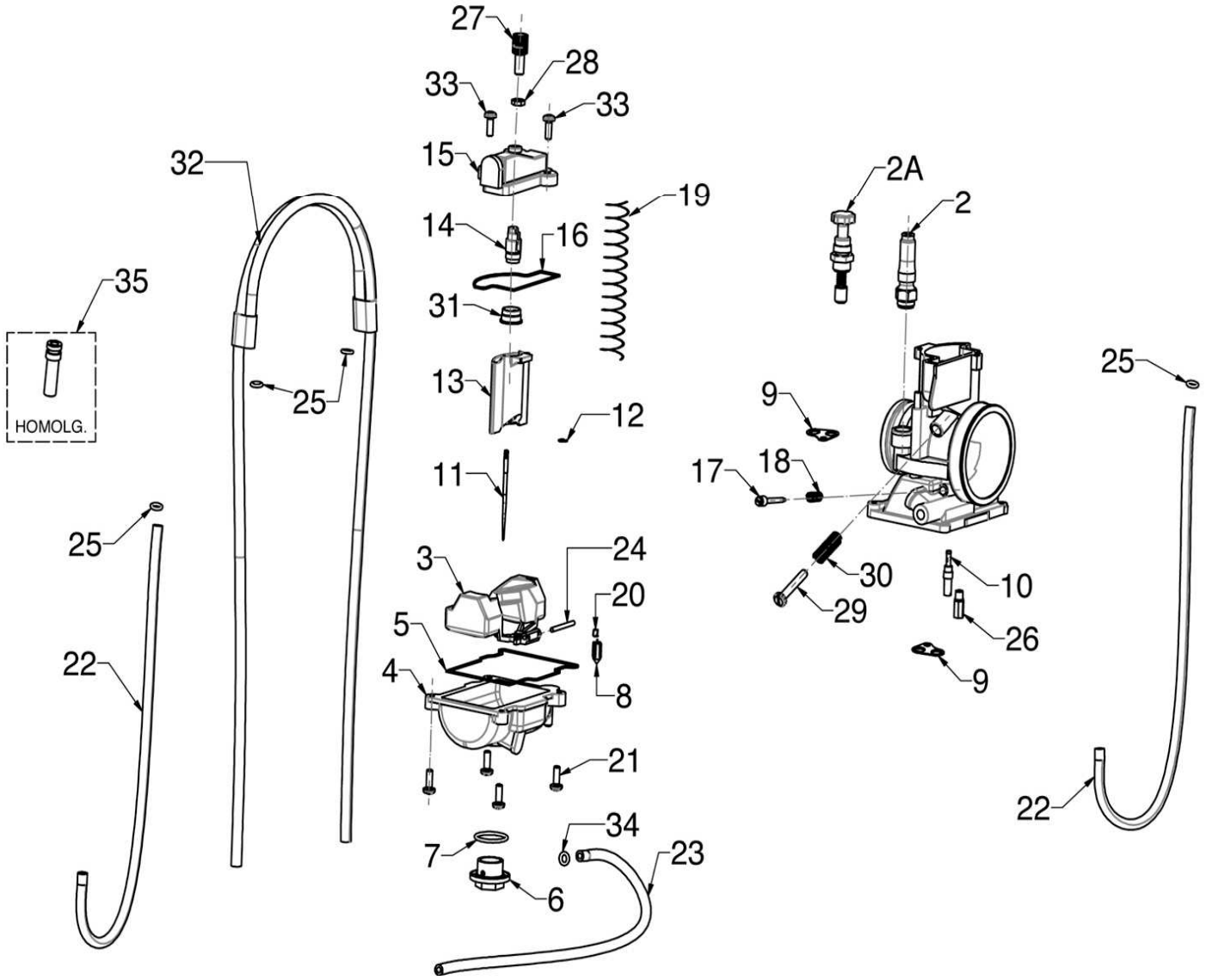
27
28
33
33
15
32
2A
2
19
14
16
35
31
HOMOLG.
25
13
12
9
25
17
18
11
25
3
24
30
10
20
29
5
26
22
4
8
9
21
22
34
7
23
6

Nº	DESCRIPCION / DESCRIPTION	250/300	Cant
1	CARBURADOR KEIHIN / KEIHIN CARBURETOR	BE780002508	1
2	MANDO ESTARTER PARA CABLE / COLD STARTER (FOR CABLE)	ME25000173012	1
2A	MANDO ESTARTER / COLD STARTER KNOB SET	ME25690011	1
3	BOYA FLOTADOR / FLOAT	ME25000183012	1
4	CUBETA FLOTADOR / FLOAT BODY	ME25000193012	1
5	JUNTA CUBETA FLOTADOR / FLOAT BODY GASKET	ME25000203012	1
6	TAPÓN CUBETA / FLOAT BODY DRAIN CAP	ME25690015	1
7	TÓRICA TAPÓN CUBETA / DRAIN CAP O'RING	ME25690016	1
8	AGUJA FLOTADOR / FLOAT NEEDLE	ME25000213012	1
9	SUJECIÓN TUBO RESPIRADERO / AIR HOSE HOLDER	ME25000223012	1
10	CHICLÉ RALENTÍ 35 / SLOW JET 35	ME25690035	1
10A	CHICLÉ RALENTÍ 42 / SLOW JET 42	ME25690042	1
11	AGUJA N1 EF / N1 EF NEEDLE	ME250190429	1
11A	AGUJA N1 EE / N1 EE NEEDLE	ME250290427	1
11B	AGUJA N1 EG / N1 EG NEEDLE	ME250290428	1
12	CLIP AGUJA / NEEDLE CLIP	ME25690021	1
13	COMPUERTA Nº 7 / THROTTLE VALVE Nº 7	ME25000233012	1
14	FIJADOR AGUJA-CABLE / NEEDLE HOLDER	ME25690023	1
15	TAPA SUPERIOR CARBURADOR / CARBURETOR COVER	ME25000243012	1
16	JUNTA TAPA CARBURADOR / CARBURETOR COVER GASKET	ME25000253012	1
17	TORNILLO REGULADOR AIRE / AIR REGULATOR SCREW	ME25000263012	1
18	MUELLE REGULADOR AIRE / AIR REGULATOR SPRING	ME25000273012	1
19	MUELLE COMPUERTA / CARBURETOR COVER SPRING	ME25000283012	1
20	CLIP NIVEL FLOTADOR / FLOAT CLIP	ME25690027	1
21	TORNILLO CUBETA / FLOAT BODY BOLT	ME25000293012	4
22	TUBO RESPIRADERO / AIR HOSE	ME25000303012	2
23	TUBO RESPIRADERO 2 / AIR HOSE 2	ME25000313012	1
24	EJE FLOTADOR / FLOAT AXLE	ME25690033	1
25	CLIP / CLIP	ME25690034	4
26	CHICLÉ ALTA 175 / MAIN JET 175	ME25690175	1
27	TENSOR CABLE / CABLE TENSOR	ME25000323012	1
28	TUERCA TENSOR CABLE / CABLE TENSOR NUT	ME25000333012	1
29	TORNILLO REGULADOR RALEN. / SLOW JET ADJUSTING BOLT	ME25690038	1
30	MUELLE TORN. REGULADOR RALENTI / ADJUSTING BOLT SPRING	ME25690039	1

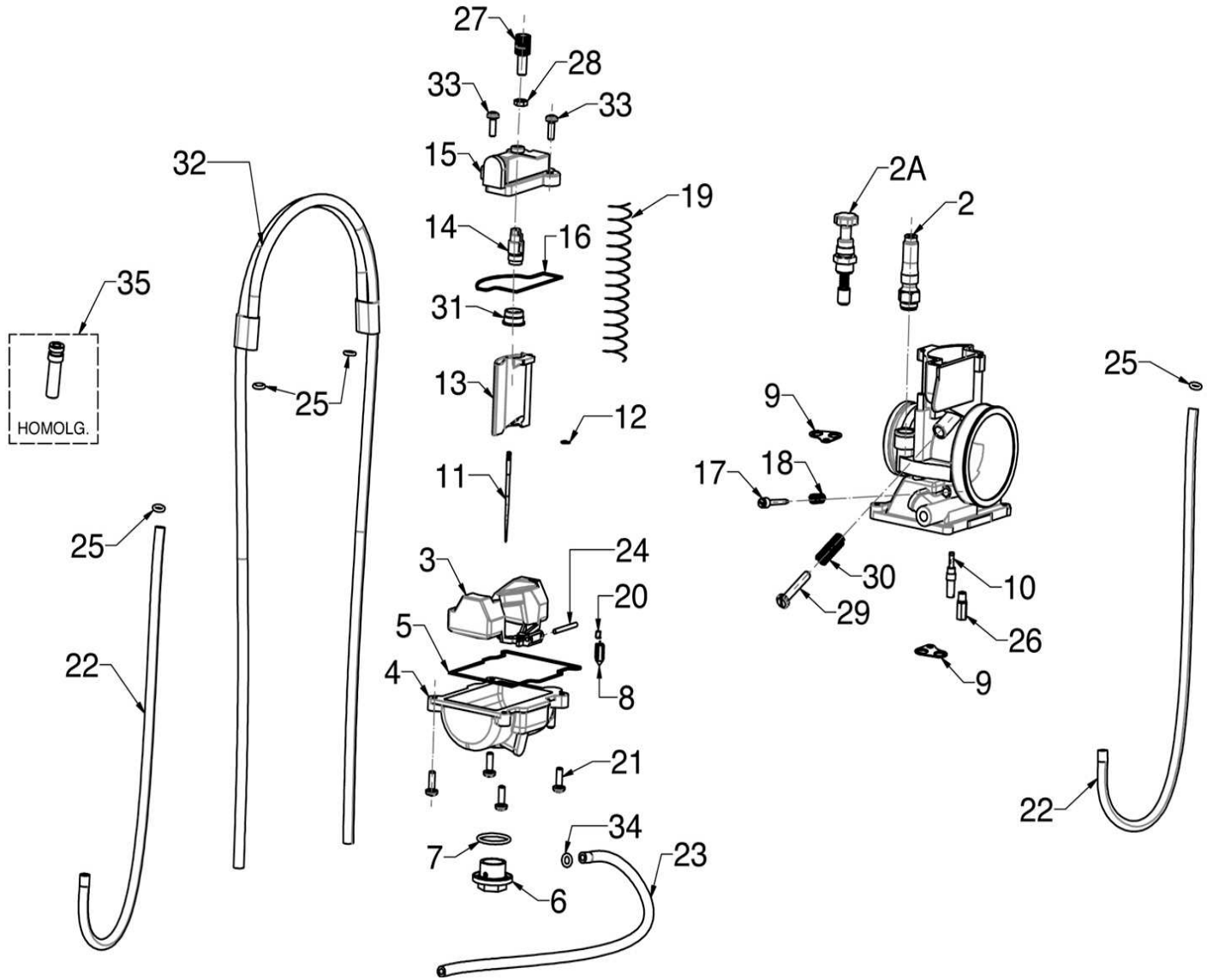
27
28
33
33
15
32
2A
19
2
14
16
35
31
HOMOLG.
25
13
25
9
12
17
18
11
25
3
24
30
10
20
29
5
26
22
4
8
9
21
22
34
7
23
6

Nº	DESCRIPCION / DESCRIPTION	250/300	Cant
31	CASQUILLO MUELLE COMPUERTA / COVER SPRING BUSHING	ME25690040	1
32	TUBO VENTILACIÓN / BOWL VENT PIPE	ME25000343012	1
33	TORNILLO TAPÓN COMPUERTA / CARBURATOR COVER SCREW	ME25000353012	2
34	CLIP TUBO RESPIRADERO 2 / CLIP FOR AIR HOSE 2	ME25000363012	1
35	TOPE MANDO DE GAS / STOP THROTTLE CABLE	ME250690010	1

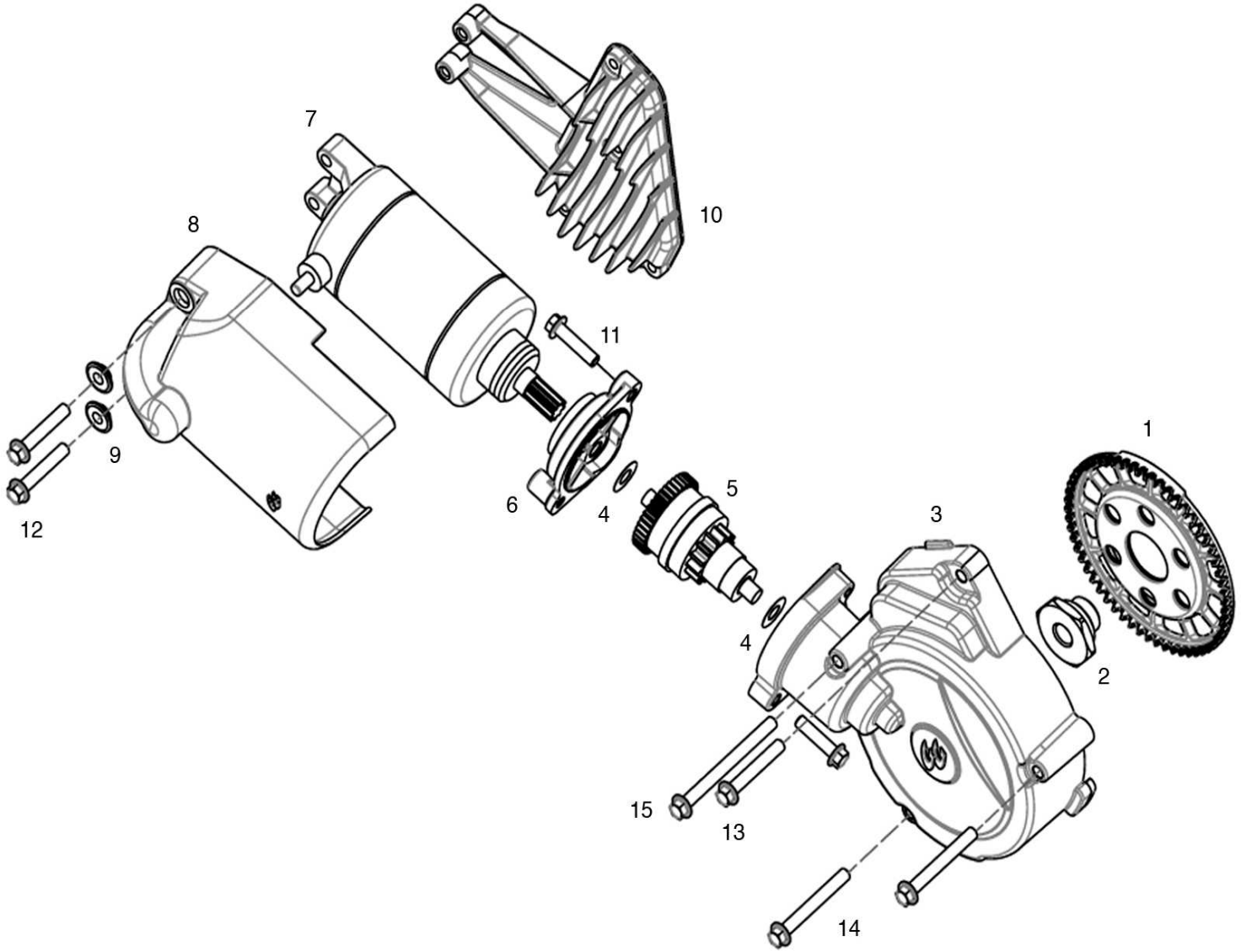
7
8
10
11
9
12
6
4
5
3
1
4
2
15
13
14

Nº	DESCRIPCION / DESCRIPTION	250/300	Cant
1	CORONA DE ARRANQUE / IGNITION SPROKET	EE802002510	1
2	TUERCA VOLANTE MAGNETICO / ROTOR NUT	ME700102510	1
3	TAPA ENCENDIDO / IGNITION COVER	ME601002510	1
4	ARANDELA / WASHER	ME25616070	2
5	BENDIX / BENDIX	EE80100CT2510	1
6	TAPA DEL BENDIX / BENDIX COVER	EE801302510	1
7	MOTOR ELÉCTRICO / E-START ENGINE	MFS450526500	1
8	TAPA DEL MOTOR ELECTRICO / E-START ENGINE COVER	EE851002510	1
9	CASQUILLO / BUSH	BE320602510	2
10	TAPA DE LA VALVULA DE ESCAPE / EXHAUST VALVE COVER	ME720302510	1
11	TORNILLO M6 X 25 / SCREW M6 X 25	T0206025	2
12	TORNILLO M6 X 30 / SCREW M6 X 30	T0206030	2
13	TORNILLO M6 X 40 / SCREW M6 X 40	T0206040	1
14	TORNILLO M6 X 50 / SCREW M6 X 50	T0206050	2
15	TORNILLO M6 X 70 / SCREW M6 X 70	T0206070	1

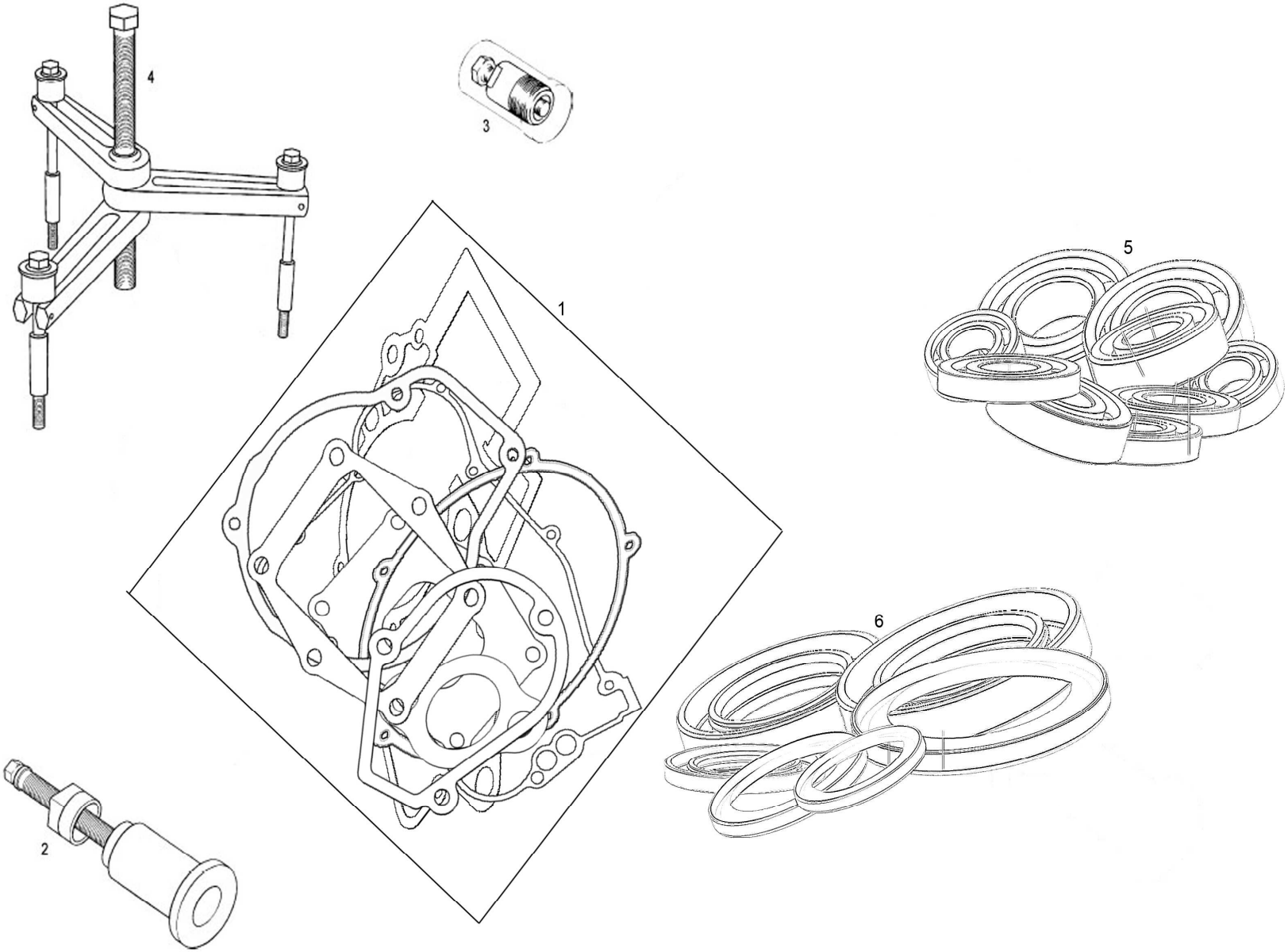
4
3
1
5
6
2

Nº	DESCRIPCION / DESCRIPTION	250/300	Cant
1	KIT DE JUNTAS MOTOR / JOINT MOTOR MEETINGS	ME250544100	1
2	EXTRACTOR SEMICIGÜEÑAL ENCENDIDO / SEMI CRANK SHAFT EXTRACTOR	ME25950000	1
3	EXTRACTOR VOLANTE KOKUSAN / KOKUSAN FLYWHEEL EXTRACTOR	ME25634045	1
4	EXTRACTOR CARTERES / CRANKCASE EXTRACTOR	ME25950005	1
5	KIT COJINETES MOTOR /MOTOR ASSEMBLY BEARINGS	ME905002510	1
6	KIT RETENES MOTOR /MOTOR ASSEMBLY SEALS	ME906002510	1

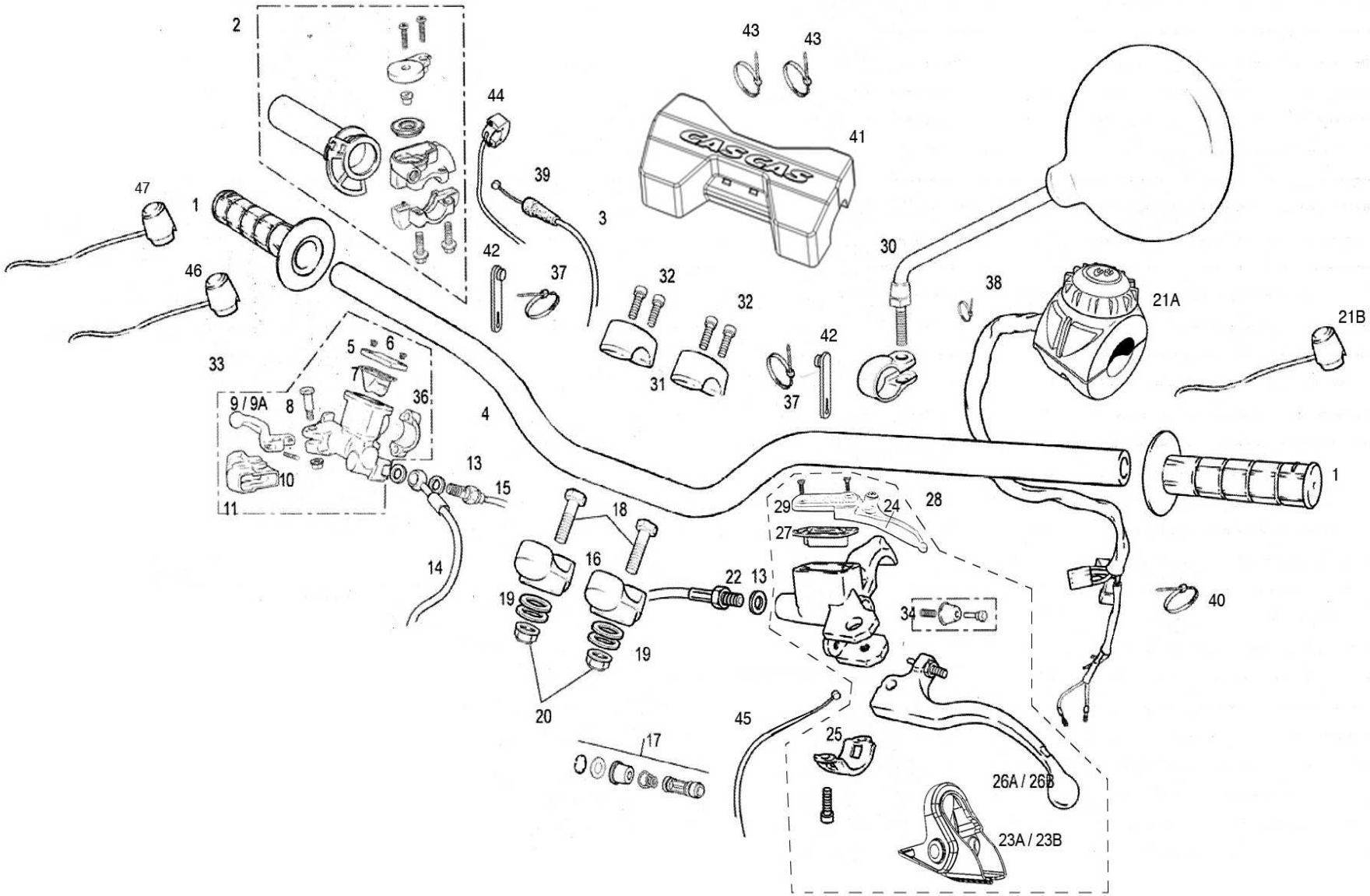
2
43
43
44
41
39
47
1
3
30
42
37
32
32
38
21A
21B
46
42
33
5
6
7
31
37
9 / 9A
8
36
4
13
15
1
10
11
29
24
28
18
27
14
16
22
13
19
34
40
19
20
45
17
25
26A / 26B
23A / 23B

Nº	DESCRIPCION / DESCRIPTION	250/300	Cant
1	JUEGO DE EMPUÑADURAS / HANDLEBAR GRIP (PAIR)	BE261002511	1
2	PUÑO DE GAS / TWIST GRIP	BE25724007	1
3	CABLE DE GAS / THROTTLE CABLE	BE785002509	1
4	MANILLAR COMPLETO / STEERING HANDLEBAR SET	BE250002511	1
5	TAPA BOMBA FRENO / BRAKE PUMP COVER	BC25922210	1
6	TORNILLO TAPA BOMBA / BRAKE PUMP SCREW	BC25922217	2
7	GOMA ANTIESPUMANTE / NO-FOAM RUBBER	BC25922216	1
8	TORNILLO ESPECIAL / SPECIAL SCREW	BC25922212	1
9A	MANETA FRENO TT 250 / FRONT BRAKE TT 250	BC250022045R	1
10	TENSOR MANETA BOMBA / PUMP LEVER TENSOR	BC25922218	1
11	GUARDAPOLVO / DUST COVER	BC25922213	1
13	ARANDELA LATIGUILLO 10X14X1 / HOSE WASHER 10X14X1	BE25622007	3
14	LATIGUILLO FRENO DEL / BRAKE HOSE FRONT	BE250422002	1
15	INTERRUPTOR STOP BOMBA / PUMP STOP SWITCH	BE250334003	1
16	BRIDA SUJECIÓN MANILLAR INFERIOR / HANDLEBAR CLAMP (LOWER)	BE250614013	2
17	KIT PISTÓN BOMBA FRENO “A” / “A” BRAKE PUMP PISTON KIT	BC25922219	1
18	*TORNILLO ESPECIAL 10X45 / 10X45 SPECIAL BOLT	T0201045	2
19	DISTANCIADOR BRIDA INFERIOR MANILLAR EC2003 / CLAMP HANDLEBAR SPACER	BE250314035	4
20	TUERCA CILINDRO 8.8 ESP. 10/150C13 / NUT CYLINDER M10	M01613001	2
21A	COMMUTADOR LUCES Y ARRANQUE ELECTRICO / START-STOP-LIGHT SWITCH	EE602002510	1
21B	INTERRUPTOR LUZ RACING (CROSS COUNTRY) / RACING LIGHT SWITCH (CROSS COUNTRY)	EE602002511	1
22	LATIGUILLO EMBRAGUE / CLUTCH HOSE	BE250522003	1
23A	GUARDAPOLVO PARA LEVA / CAP FOR CHOCKE	BE45000083011	1
23B	GUARDAPOLVO / CAP	BE45000093011	1
24	LEV A STARTER / STARTER LEVER	BE45000073011	1
25	BRIDA SUJECIÓN / MOUNTING BRACKET	BE45000063011	1
26A	MANETA EMBRAGUE CORTA / SHORT CLUTCH LEVER	BE45000023011	1
26B	MANETA EMBRAGUE LARGA / LONG CLUTCH LEVER	BE45000033011	1
27	MEMBRANA DEPÓSITO / RESERVOIR MEMBRANE	BE45000103011	1
28	BOMBA EMBRAGUE HIDRÁULICO / HYDRAULIC CLUTCH PUMP	BE45000013011	1
29	KIT TAPA BOMBA EMBRAGUE / CLUTCH PUMP COVER KIT	BE45000053011	1
30	ESPEJO RETROVISOR / REAR-VIEW MIRROR	L300760	2
31	BRIDA SUJECIÓN MANILLAR SUPERIOR / HANDLEBAR CLAMP (UPPER)	BE250614012	2
32	TORNILLO SUJECIÓN BRIDA MANILLAR 8x30 / CLAMP SCREW 8x30	T0308030	4

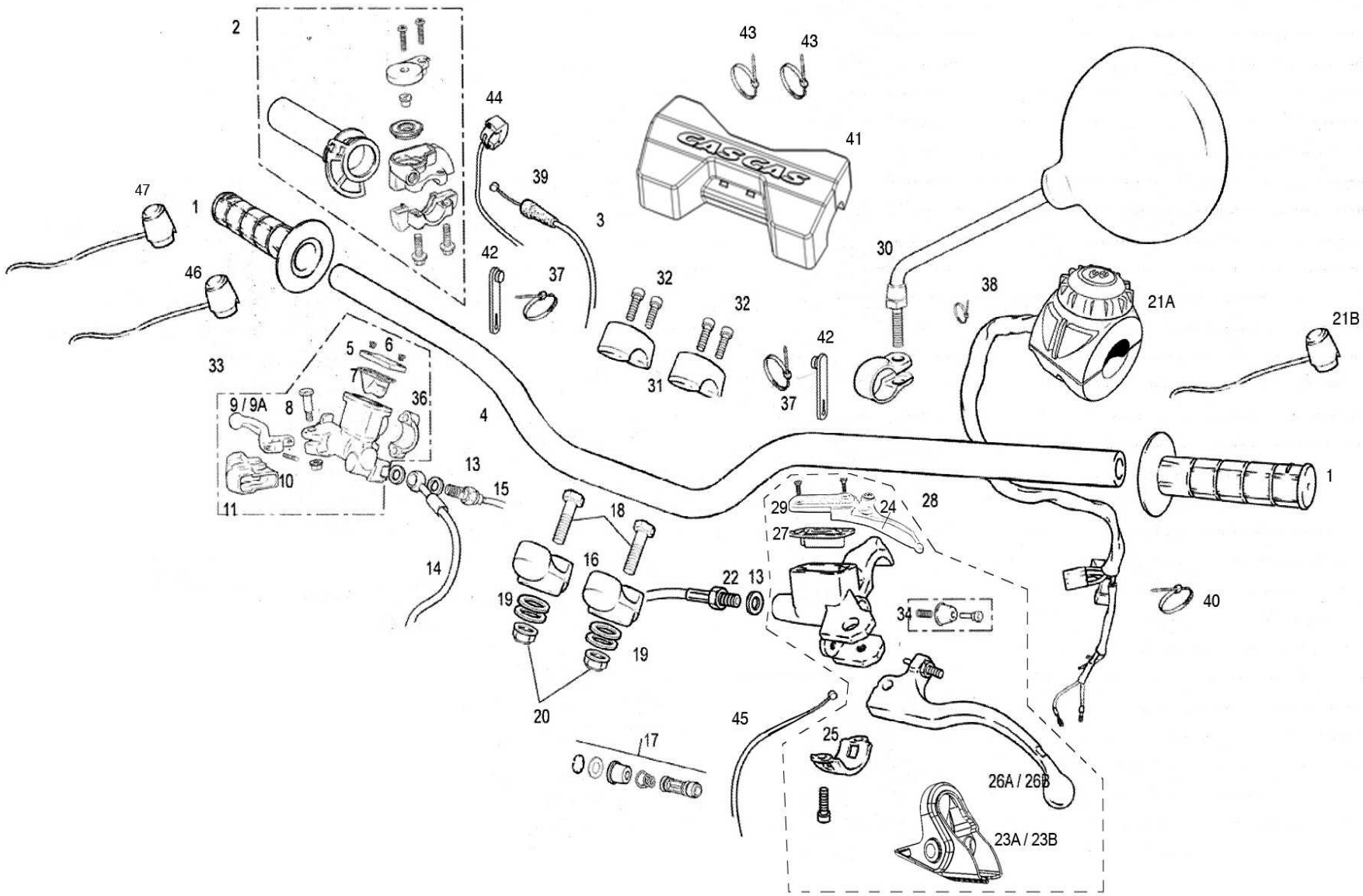
2
43
43
44
41
39
47
1
3
42
37
32
32
30
38
21A
21B
46
42
37
31
33
5
6
9 / 9A
8
36
4
13
15
10
11
1
29
24
28
27
18
16
14
22
13
19
34
40
19
20
45
17
25
26A / 26B
23A / 23B

Nº	DESCRIPCION / DESCRIPTION	250/300	Cant
33	BOMBA FRENO DELANTERO / FRONT BRAKE PUMP SET	BC25922008	1
34	KIT PISTÓN 9,5 / PISTON KIT 9,5	BE45000043011	1
36	BRIDA	BC25922211	1
37	BRIDA GRANDE / BIG CLAMP	BE25634009	2
38	BRIDA PEQUEÑA / LITTLE CLAMP	BE25634010	1
39	GUARDAPOLVO CABLE GAS / DUST COVER THROTTLE CABLE	G600000	1
40	BRIDA UNEX CORTA 2221-0 2.5X98 / SHORT UNEX CLAMP 2221-0 2.5X98	BE25634010	1
41	PROTECTOR MANILLAR DIAMETRO VARIABLE / VARIABLE DIAMETER HANDLEBAR PROTECTOR	BE250724004	1
42	GOMA SUJECIÓN CABLEADO / CABLED RUBBER HOLDER	BFS450320067	2
43	BRIDAS SERRETAS / CLAMP	BE25634007	2
44	INTERRUPTOR CDI / CDI SWITCH	ET511902810	1
45	CABLE STARTER /STARTER CABLE	BE256012508	1
46	BOTÓN DE PARO (CROSS COUNTRY) / STOP BUTTON (CROSS COUNTRY)	BC250334055	1
47	BOTÓN DE ARRANQUE (CROSS COUNTRY) / START-UP BUTTON (CROSS COUNTRY)	BFS450434027	1

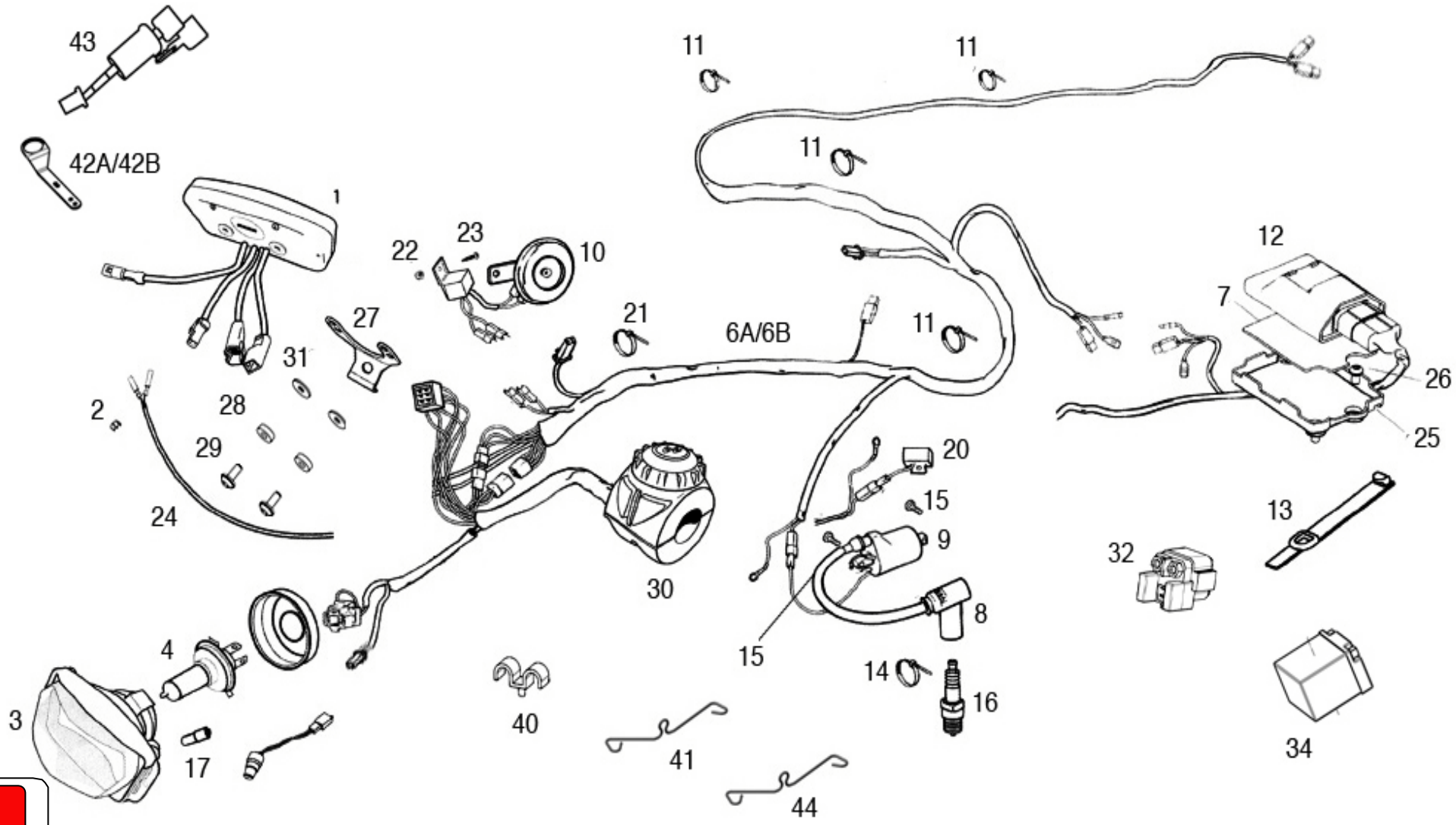
43
42A/42B
1
22
23
10
27
31
28
29
2
24
21
6A/6B
11
11
11
11
12
7
26
25
20
15
9
8
30
15
14
16
13
32
34
4
3
17
40
41
44

Nº	DESCRIPCION / DESCRIPTION	250/300	Cant
1	CTO. MULTIFUNCIÓN ENDURO / ENDURO MULTIFUNCTION SET	EE600002511	1
2	PASACABLES CTA. KMS. / SPEED CABLE HOSE	EE650202508	3
3	ÓPTICA HALÓGENA / HALOGEN OPTIC	EE200002511	1
4	BOMBILLA HALÓGENA HS1 12V35- 35W / HS1 12V35-35W HALOGEN BULB	L300125	1
5	INTERMITENTE IZQUIERDO DELANTERO / LEFT FRONT INDICATOR	BE250634019	1
6A	INSTALACIÓN ELÉCTRICA (INCL. INST. INTERMITENTES) / WIRING HARNESS (BLINKERS WIRING INCL.)	EE10000053012	1
6B	INSTALACIÓN ELÉCTRICA (CROSS COUNTRY) / WIRING HARNESS (CROSS COUNTRY)	EE10000063012	1
7	ESPUMA PROTECTOR CDI EC 2005 / EC 2005 CDI PROTECTOR FOAM	BE250534109	1
8	PIPA BUJÍA LBMH / SPARK PLUG CAP LBMH	BE25934000	1
9	BOBINA KOKUSAN / KOKUSAN IGNITION COIL	ME250434006	1
10	CLAXON / HORN	EFS204004508	1
11	BRIDA UNEX 4,8X20 / UNEX CLAMP 4.8X20	BE25634009	7
12	CDI KOKUSAN / KOKUSAN CDI	ME250634007	1
13	GOMA SUJECIÓN CDI / CDI ELASTIC BAND	BE250034100	1
14	BRIDA UNEX CORTA 2221-0 2.5X98 / SHORT CLAMP 2221-0 2.5X98	BE25634010	1
15	TORNILLO 6X16 / SCREW 6X16	T0206016	2
16	BUJÍA W24ESRU / PLUG W24ESRU	ME25934000	1
17	BOMBILLA LUZ POSICIÓN / SIDELIGHT BULB	L300126	1
18	ULS 6X16 NEGRO / 6X16 ULS BLACK BOLT	T0506016N	2
19	TUERCA CON ARANDELA M6 / NUT WITH WASHER M6	T2206000	2
20	REGULADOR / REGULATOR	EE512002510	1
21	BRIDA NYLON 3.6X140 / NYLON CLAMP 3,6X140	BE250022031	1
22	TUERCA M6 / NUT M6	T2606000	1
23	TORNILLO ULS M6X16 / ULS SCREW M6X16	T0556016	1
24	CABLE MULTIFUNCIÓN TT 2003 / 2003 TT MULTIFUNCTION HOSE	BE250634050	1
25	SOPORTE CDI EC 2008 / EC 2008 CDI SUPPORT	BE250534107	1
26	TORNILLO ULS M6X12 / ULS SCREW M6X12	T0506012	2
27	SOPORTE MULTIFUNCIÓN / MULTIFUNCTION SUPPORT	BFS450634045	1
28	ARANDELA GOMA / RUBBER WASHER	EE650102508	2
29	TORNILLOS M4 X 10 / SCREW M4 X 10	T0554010N	2
30	COMMUTADOR LUCES Y ARRANQUE ELECTRICO / START-STOP-LIGHT SWITCH	EE602002510	1
31	ARANDELA D4 / WASHER D4	T4004012	2

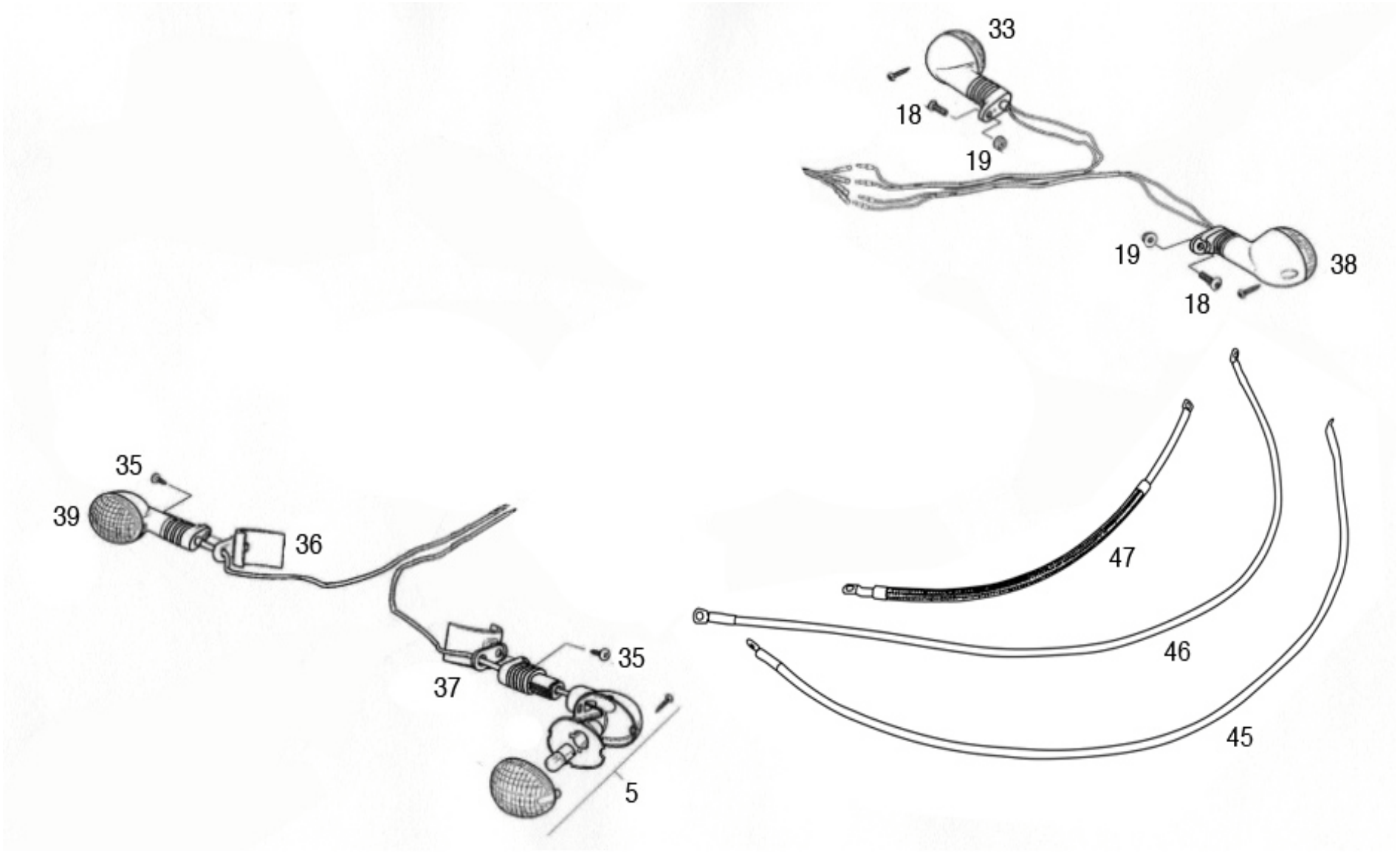
33
18
19
19
38
18
35
39
36
47
35
37
46
45
5

Nº	DESCRIPCION / DESCRIPTION	250/300	Cant
32	RELE DE ARRANQUE / START-UP RELAY	BFS400134075/2	1
33	INTERMITENTE DERECHO TRASERO / RIGHT REAR INDICATOR	BE250634021	1
34	BATERIA / BATERY	BFS400134080/2	1
35	TORNILLO CHAPA / SPECIAL SCREW	T0706316	2
36	SOPORTE INTERMITENTE DEL. DER. / RIGHT FRONT INDICATOR HOLDER	BE250134017	1
37	SOPORTE INTERMITENTE DEL. IZDO / LEFT FRONT INDICATOR HOLDER	BE250134020	1
38	INTERMITENTE IZQUIERDO TRASERO / LEFT REAR INDICATOR	BE250634022	1
39	INTERMITENTE DERECHO DELANTERO / RIGHT FRONT INDICATOR	BE250634018	1
40	SOPORTACABLES / WIRING HOLDER	EE10000083012	6
41	MUELLE DERECHO SUJECCION CABLES / RIGHT WIRING HOLDER SPRING	EE10000093012	1
42A	SOPORTE LLAVE DE CONTACTO / SUPPORT FOR INGNITION KEY	BE050634072	1
42B	SOPORTE LLAVE DE CONTACTO (CROSS COUNTRY) / SUPPORT FOR IGNITION KEY (CROSS COUNTRY)	EE651002511	1
43	LLAVE DE CONTACTO / IGNITION KEY	BQ050434032	1
44	MUELLE IZQUIERDO SUJECCIÓN CABLES / LEFT WIRING HOLDER SPRING	EE10000133012	1
45	CABLE RELÉ MOTOR ARRANQUE / STARTER RELAY CABLE	EE10000123012	1
46	CABLE NEGATIVO BATERIA / BATTERY NEGATIVE POLE CABLE	EE10000103012	1
47	CABLE POSITIVO BATERIA / BATTERY POSITIVE POLE CABLE	EE10000113012	1

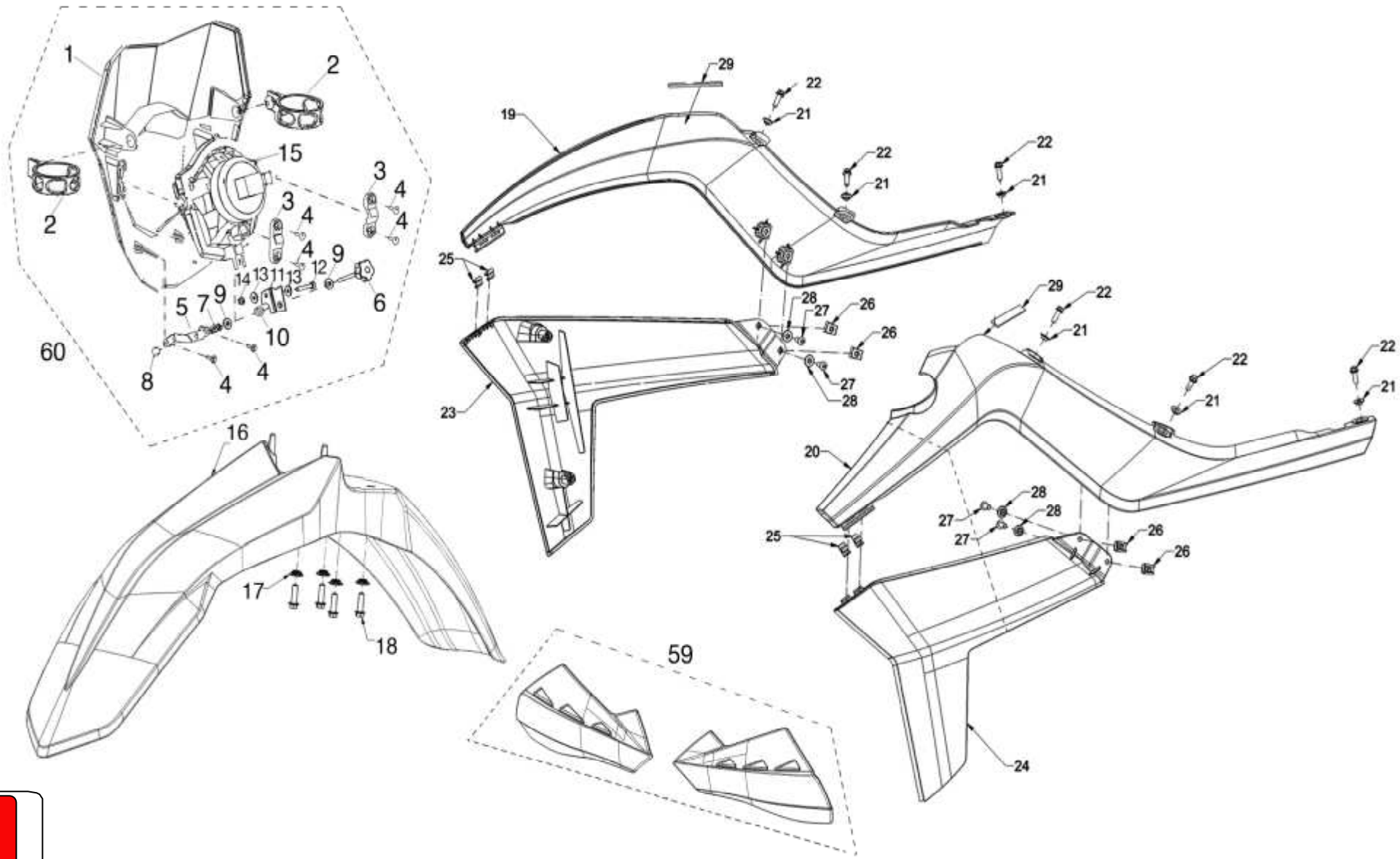
1
2
2
15
3
4
3
4
4
4
9
12
13
11
13
14
9
5
7
6
10
60
8
4
4
29
22
21
19
22
21
22
21
25
28
27
26
26
27
28
23
29
22
21
22
21
22
21
20
28
28
27
27
25
26
26
16
17
18
59
24

Nº	DESCRIPCION / DESCRIPTION	250/300	Cant
1	PORTAFAROS DELANTERO BLANCO 2012 / HEAD LIGHT MASK WHITE 2012	BE90000023012	1
2	GOMA SUJETA FARO / MASK RUBBER	BE25635015	2
3	SOPORTE FARO BLANCO / HEAD LIGHT HOLDER WHITE	BE905102511	2
4	TORNILLO 4 X 12 / SCREW 4 X 12	T0804012	6
5	CHAPA REGULACION FARO / HEAD LIGHT ADJUSTER PLATE	BE90000033012	1
6	TORNILLO REGULACION FARO / HEAD LIGHT ADJUSTER SCREW	BE35000013012	1
7	MUELLE / SPRING	BX250020026	1
8	TUERCA M5 / NUT M5	T2105000	1
9	ARANDELA D5 / WASHER D5	T4005012	2
10	CASQUILLO / BUSH	T90055100006M	1
11	PLACA / PLATE	EE20000013012	1
12	TORNILLO ALLEN M4 X 25 / ALLEN SCREW M4 X 25	T0304025	1
13	ARANDELA D4 / WASHER D4	T4004012	2
14	TUERCA M4 / NUT M4	T2104000	1
15	OPTICA FARO DELANTERO / HEAD LIGHT	EE200002511	1
16	GUARDABARROS DELANTERO ROJO 2012 / FRONT FENDER RED 2012	BE90000143012	1
17	CASQUILLO / BUSH	BE250032060	4
18	TORNILLO M6 X 20 / SCREW M6 X 20	T0206020	4
19	TAPA RADIADOR SUP. DER. ROJA 2012 / UPPER RIGHT RADIATOR COVER RED 2012	BE90000243012	1
20	TAPA RADIADOR SUP. IZQ. ROJA 2012 / UPPER LEFT RADIATOR COVER RED 2012	BE90000253012	1
21	CASQUILLO / BUSH	T90052080004K	6
22	TORNILLO M5 X 16 / SCREW M5 X 16	T0505016	6
23	TAPA RADIADOR INF. DER. NEGRA 2012 / LOWER RIGHT RADIATOR COVER BLACK 2012	BE90000263012	1
24	TAPA RADIADOR INF. IZQ. NEGRA 2012 / LOWER LEFT RADIATOR COVER BLACK 2012	BE90000273012	1
25	GRAPA FIJACION TAPAS / FIXING CLAMP	BE35000083012	4
26	TUERCA / NUT	BX250020029	4
27	TORNILLO 4.8 X 13 / SCREW 4.8 X 13	T0606013	4
28	ARANDELA D5 / WASHER D5	T4005012	4
29	TIRA GOMA ADHESIVA / ADHESIVE RUBBER TAPE	BE10000553012	2
30	CINTA DE CIERRE ADHESIVA / ADHESIVE LOCKING TAPE	BE90000413012	2

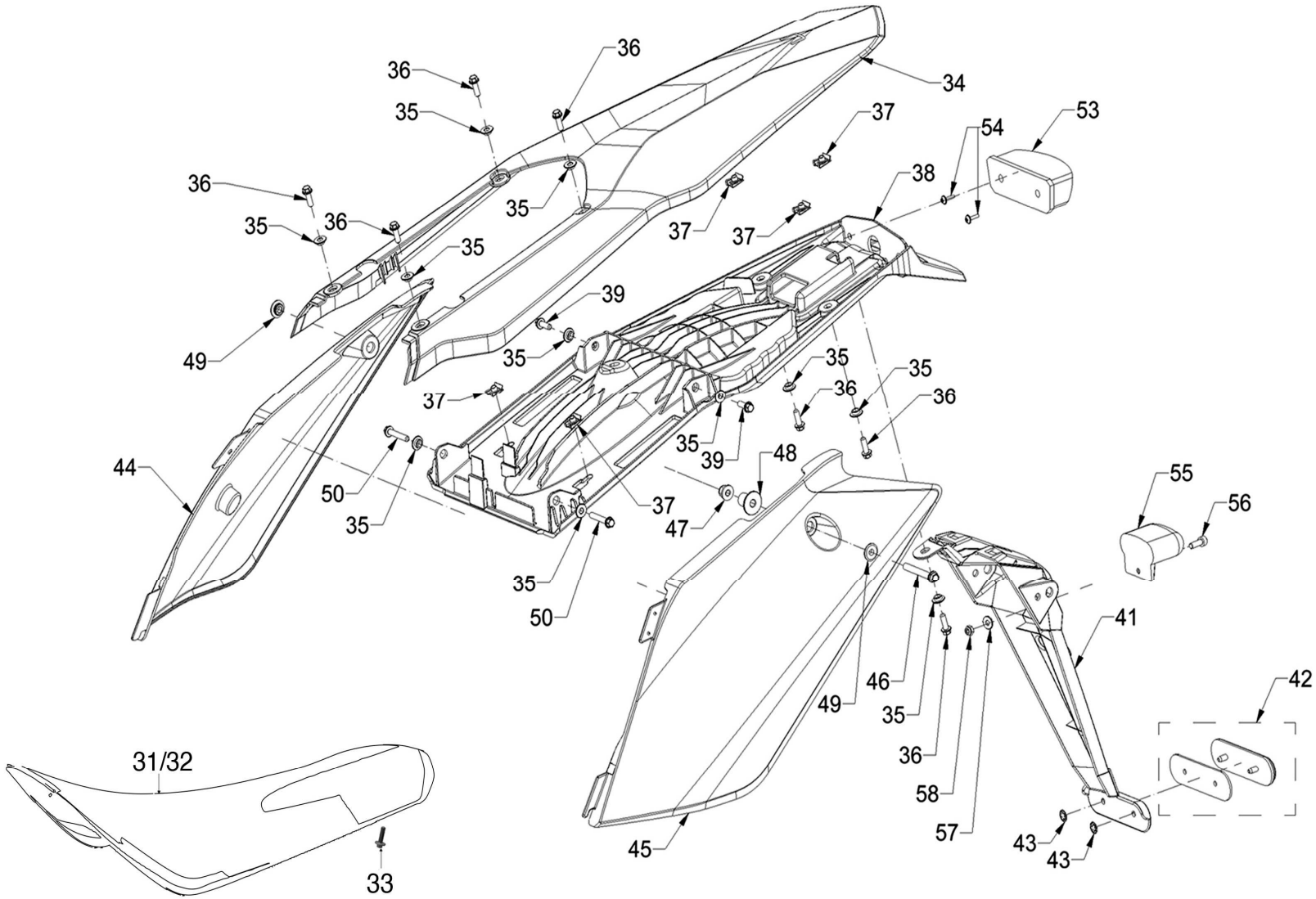
36
36
35
34
37
53
54
36
35
36
35
38
35
37
37
35
39
49
35
35
35
37
36
36
35
39
48
44
50
35
37
47
55
56
35
50
41
46
49
35
42
36
58
57
43
43
45
31/32
33

Nº	DESCRIPCION / DESCRIPTION	250/300	Cant
31	SILLIN 2012 / SEAT 2012	BE90000173012	1
32	FUNDA SILLIN 2012 / SEAT COVER 2012	BE90000453012	1
33	TORNILLO M6 X 20 / SCREW M6 X 20	T0606020	1
34	GUARDABARROS TRASERO BLANCO 2012 / REAR FENDER WHITE 2012	BE90000283012	1
35	CASQUILLO / BUSH	T90052080004K	11
36	TORNILLO M5 X 16 / SCREW M5 X 16	T0505016	4
37	TUERCA M5 / NUT M5	T810599990001	5
38	SOPORTE GUARDABARROS TRASERO / REAR FENDER SUPPORT	BE90000093012	1
39	TORNILLO M5 X 15 / SCREW M5 X 15	T0205015	2
40	TAPA DE CONECTORES / PLUGS COVER	BE90000153012	1
41	PORTAMATRICULA / NUMBER PLATE SUPPORT	BE90000123012	1
42	CATADRIOPTICO / REFLECTOR RED	BQ300234125/2	1
43	GRAPA / CLIP	BQ300234126	2
44	PORTANUMERO DERECHO BLANCO 2012 / RIGHT NUMBER PLATE WHITE 2012	BE90000103012	1
45	PORTANUMERO IZQUIERDO BLANCO 2012 / LEFT NUMBER PLATE WHITE 2012	BE90000113012	1
46	TORNILLO M6 X 45 / SCREW M6 X 45	T0206045	1
47	TUERCA M6 / NUT M6	T2206002	1
48	CASQUILLO / BUSH	BE250026000	1
49	CASQUILLO / BUSH	BE250032060	2
50	TORNILLO M5 X 30 / SCREW M5 X 30	T0205030	2
51	TORNILLO M5 X 25 / SCREW M5 X 25	T0205025	1
52	TORNILLO M5 X 15 / SCREW M5 X 15	T0205015	2
53	PILOTO TRASERO / REAR LIGHT	BE250734015	1
54	TORNILLO M4 X 12 / SCREW M4 X 12	T0804012	2
55	LUZ MATRICULA / NUMBER PLATE LIGHT	BE250734124	1
56	TORNILLO ALLEN M5 X 16 / ALLEN SCREW M5 X 16	T0305016	1
57	ARANDELA D5 / WASHER D5	T4005012	1
58	TUERCA M5 / NUT M5	T2105001	1
59	PARAMANOS ROJO / HANDGUARD RED	BE94500R3011	1
60	CTO. FARO 2012 BLANCO / HEAD LIGHT ASSY 2012 WHITE	BE90000013012	1

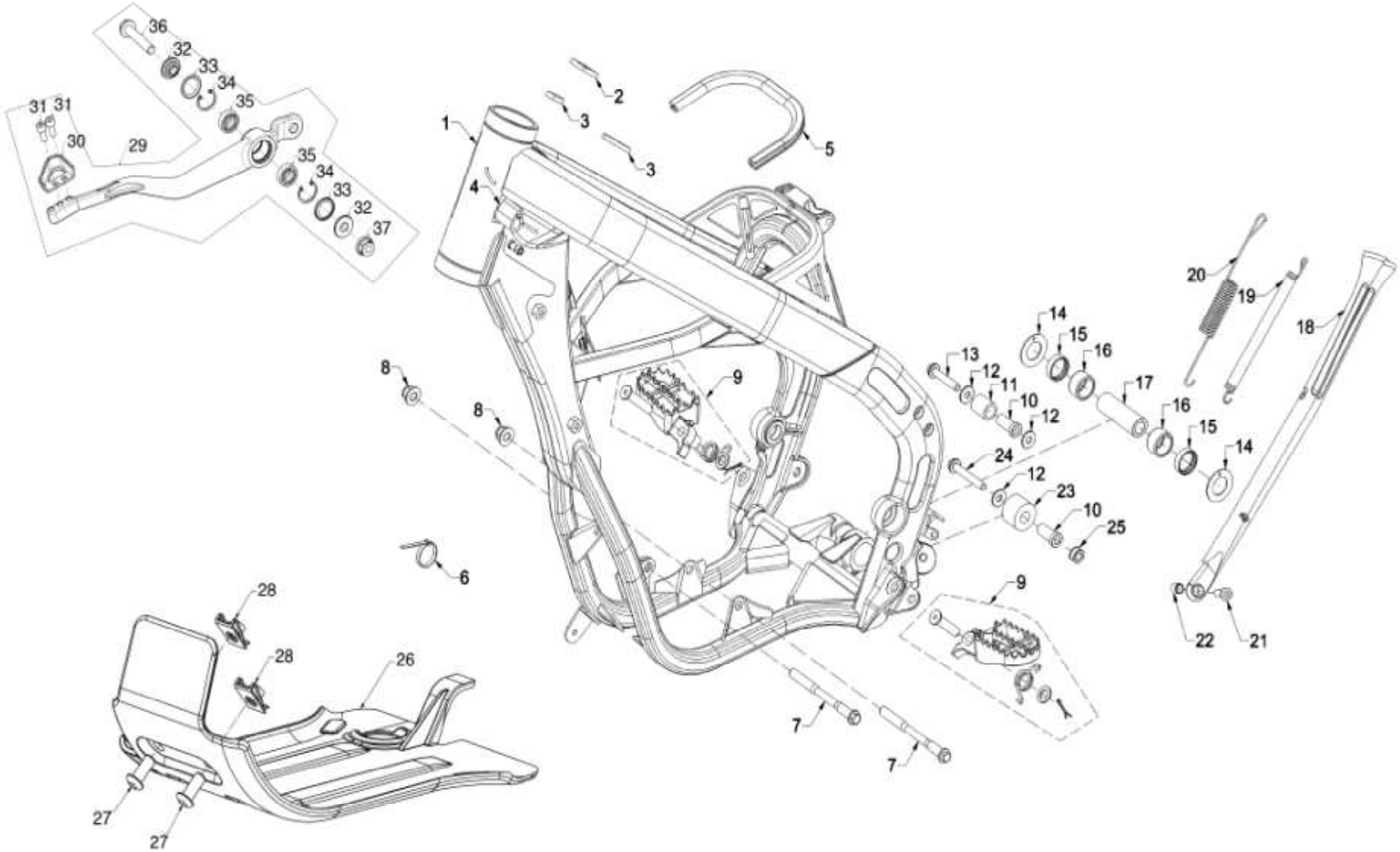
36
32
33
34
35
31 31
30
29
35
34
33
32
37
1
2
3
3
5
4
20
19
18
14
15
16
13
12
11
10
12
17
16
15
14
8
9
8
24
12
23
10
25
6
9
22
21
28
28
26
7
7
27
27

Nº	DESCRIPCION / DESCRIPTION	250/300	Cant
1	CHASIS ROJO 2012 / FRAME RED 2012	BE10000013012	1
2	CUADRADO GOMA ADHESIVA / ADHESIVE RUBBER SQUARE	BE10000303012	1
3	TIRA GOMA ADHESIVA / ADHESIVE RUBBER STRIP	BE10000313012	2
4	CLAUSOR / STEERING LOCK	BT280210075	1
5	BURLETE / RUBBER SEAM	BE10000563012	1
6	BRIDA 4.8 X 20 / STRAP 4.8 X 20	BE25634009	2
7	TORNILLO M10 X 118	T0210118	2
8	TUERCA M10 X 125 / NUT M10 X 125	T3110002	2
9	CONJUNTO ESTRIBOS / FOOTREST ASSY	BE10000223012	1
10	CASQUILLO / BUSH	BE25612016	2
11	RODILLO / ROLLER	BE25610014	1
12	ARANDELA D8 / WASHER D8	T4008020	3
13	TORNILLO M8 X 45 / SCREW M8 X 45	T0208045	1
14	ARANDELA IGLIDUR / WASHER IGLIDUR	T4003822	2
15	RETEN D28 / SEAL D28	BE32025N3011	2
16	JAULA DE AGUJAS / NEEDLE BEARING	BE25614010	2
17	EJE / AXLE	BE32020N3011	1
18	CABALLETE / SIDE STAND	BE10000323012	1
19	MUELLE INTERNO CABALLETE / INNER SPRING FOR SIDE STAND	BE10000523012	1
20	MUELLE EXTERNO CABALLETE / OUTER SPRING FOR SIDE STAND	BE250510039	1
21	TORNILLO M8 X 30 / SCREW M8 X 30	T0508030	1
22	CASQUILLO ACERO / STEEL BUSH	T90081110015C	1
23	RODILLO / ROLLER	BE25610032	1
24	TORNILLO M8 X 55 / SCREW M8 X 55	T0208055	1
25	DISTANCIADOR / SPACER	BE250714036	1
26	PROTECTOR CARTER 2012 / SKID PLATE 2012	BE90000163012	1
27	TORNILLO M8 X 20 / SCREW M8 X 20	T0508020	2
28	TUERCA M8 / NUT M8	BT280010041	2
29	CONJUNTO PEDAL FRENO TRASERO / REAR BRAKE LEVER ASSY	BE15000003012	1
30	PUNTERA PEDAL FRENO TRASERO / STEP PLATER FOR REAR BRAKE LEVER	BE130102510	1
31	TORNILLO ALLEN M5 X 12 / ALLEN SCREW M5 X 12	T0305012	2
32	CASQUILLO / BUSH	B15000023012	2

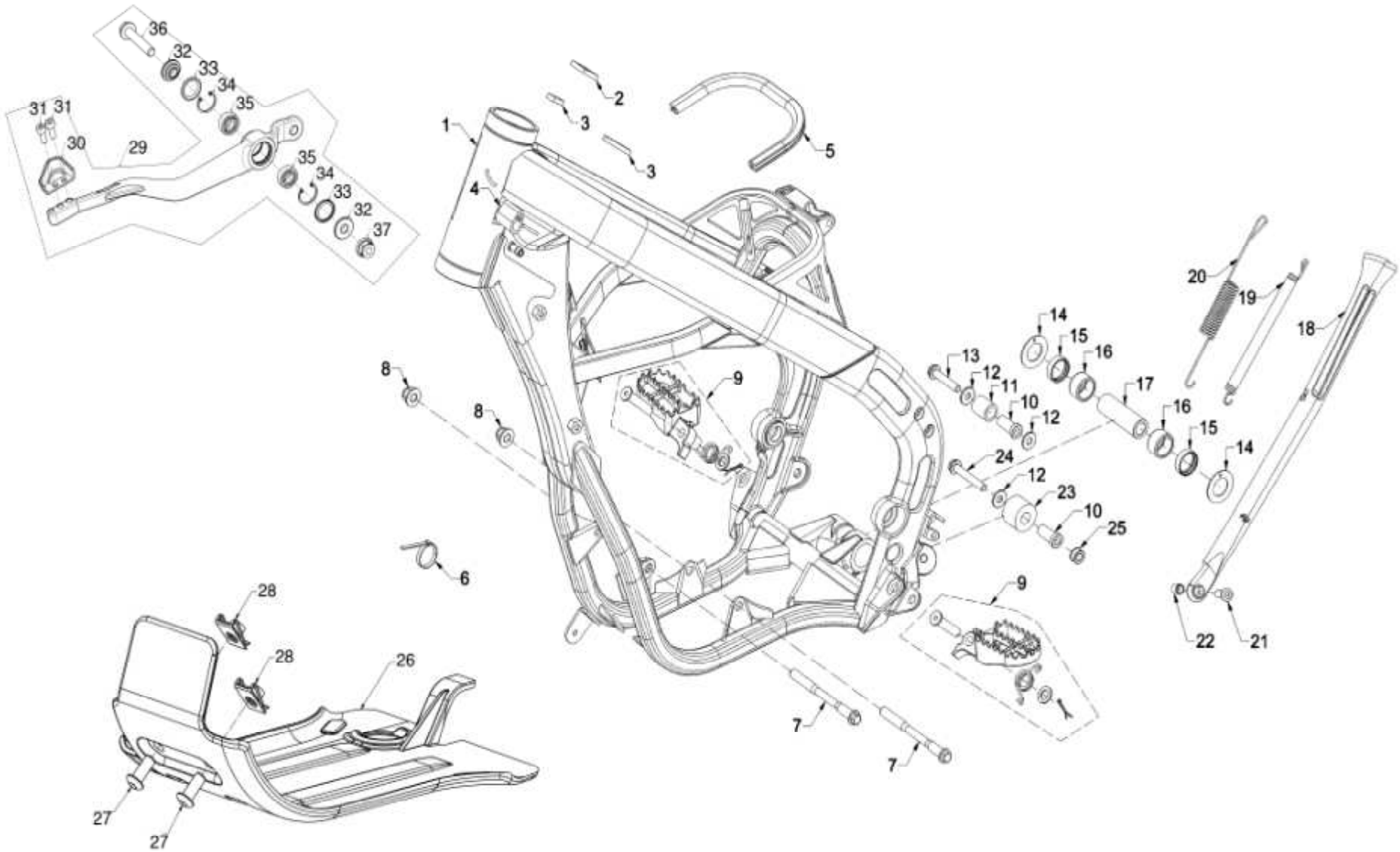
36
32
33
34
35
31 31
30
29
35
34
33
32
37
1
2
3
3
5
4
20
19
18
14
15
16
13
12
11
10
12
17
16
15
14
8
9
8
24
12
23
10
25
6
9
28
28
26
22
21
7
7
27
27

Nº	DESCRIPCION / DESCRIPTION	250/300	Cant
33	RETEN D15 / SEAL D15	C230001	2
34	ARANDELA SEEGER D19 / WASHER SEEGER D19	SE01190100109	2
35	RODAMIENTO BOLAS / BALL BEARING	RD0108019006A	2
36	TORNILLO M8 X 45 / SCREW M8 X 45	T0208045	1
37	TUERCA M8 / NUT M8	T2208002	1

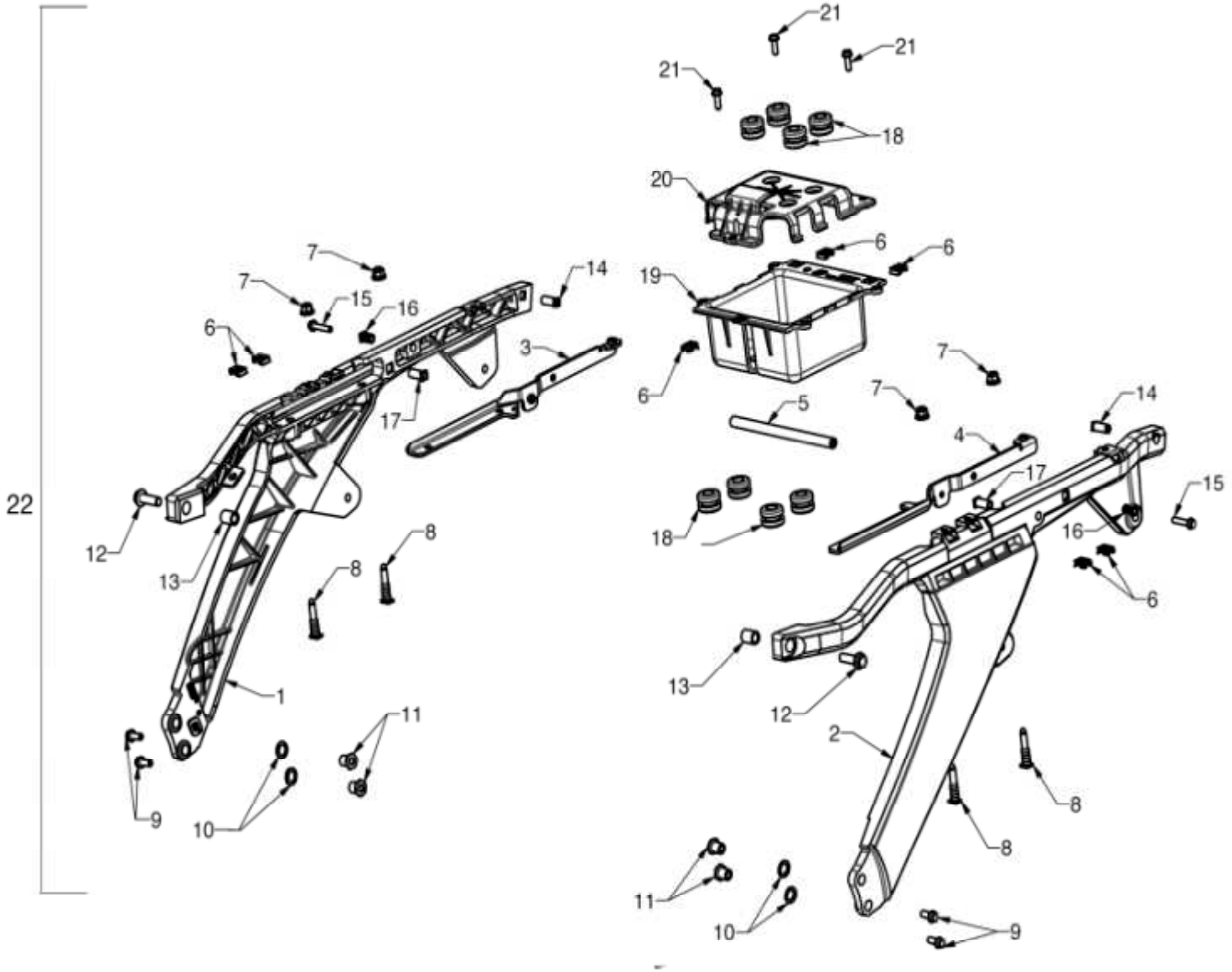
22
21
21
21
18
20
6
6
19
7
14
7
15
16
6
3
6
7
7
5
14
4
17
15
18
16
8
8
12
13
6
1
13
12
11
2
9
10
8
8
11
10
9

Nº	DESCRIPCION / DESCRIPTION	250/300	Cant
1	LATERAL DERECHO SUBCHASIS / SUBFRAME RIGHT SIDE	BE10000263012	1
2	LATERAL IZQUIERDO SUBCHASIS / SUBFRAME LEFT SIDE	BE10000273012	1
3	PLETINA DERECHA SUBCHASIS / SUBFRAME RIGHT PLATE	BE10000583012	1
4	PLETINA IZQUIERDA SUBCHASIS / SUBFRAME LEFT PLATE	BE10000593012	1
5	TIRANTE / BRACE	BE10000603012	1
6	TUERCA M5 / NUT M5	T810599999991	7
7	TUERCA / NUT	T2206002	4
8	CASQUILLO M6 / BUSH M6	BE10000703012	4
9	TORNILLO M6 X 14 / SCREW M6 X 14	T0206014	4
10	ARANDELA D6 / WASHER D6	MIT50034012	4
11	CASQUILLO M6 / BUSH M6	BE10000383012	4
12	TORNILLO M8 X 25 / SCREW M8 X 25	T0208025	2
13	CASQUILLO D12 / BUSH D12	T90082120015B	2
14	CASQUILLO M5 / BUSH M5	BE10000433012	2
15	TORNILLO M5 X 25 / SCREW M5 X 25	T0205025	2
16	CASQUILLO d5,25 X L14 / BUSH d5,25 X L14	BE10000613012	2
17	CASQUILLO d5,25 X L19,5 / BUSH d5,25 X L19,5	BE10000633012	2
18	SILENBLOCK / SILENTBLOCK	BE250026005	8
19	SEMICAJA INFERIOR BATERIA / BATTERY LOWER BOX	BE10000293012	1
20	SEMICAJA SUPERIOR BATERIA / BATTERY UPPER BOX	BE10000283012	1
21	TORNILLO M5 X 10 / SCREW M5 X 10	T0205010	3
22	CTO. SUBCHASIS 2012 / SUBFRAME ASSY 2012	BE10000263012CT	1

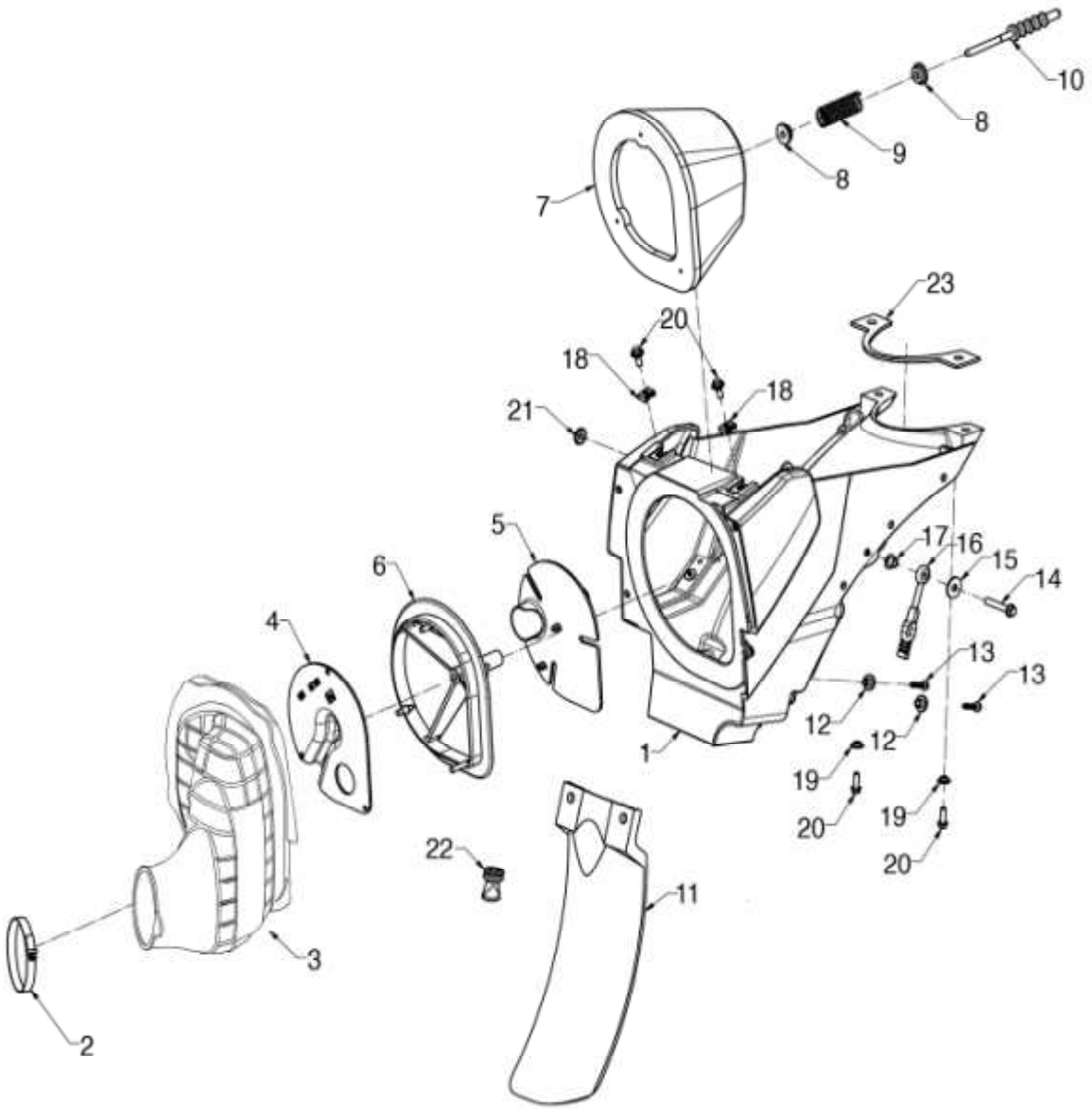
10
8
9
8
7
23
20
18
18
21
5
17
16
15
14
6
4
13
13
12
12
1
19
20
19
20
22
11
3
2

Nº	DESCRIPCION / DESCRIPTION	250/300	Cant
1	CAJA DE FILTRO 2012 / FILTER BOX 2012	ME25000113012	1
2	ABRAZADERA / CLAMP	BE250328033	1
3	TOBERA CONEXIÓN CARBURADOR / CARBURATOR CONNECTING	BE250128017/2	1
4	RESTRICCION FILTRO AIRE DELANTERA / FRONT AIR FILTER RESTRICTION	BE798002508	1
5	RESTRICCION FILTRO AIRE TRASERA / REAR AIR FILTER RESTRICTION	BE798052508	1
6	SOPORTE FILTRO AIRE / AIR FILTER CARRIER	BE250628002	1
7	FILTRO AIRE / AIR FILTER	BE250728000	1
8	ARANDELA NYLON / NYLON WASHER	BE250728052	2
9	MUELLE / SPRING	BE250728051	1
10	VARILLA FILTRO AIRE / AIR FILTER SUPPORT	MF25000032512	1
11	PROTECTOR SUSPENSION TRASERA / FENDER FOR FILTER BOX	BE25620008	1
12	CASQUILLO / BUSH	BE250728059	2
13	TORNILLO 4,5 X 20 / SCREW 4,5 X 20	BE250728058	2
14	TORNILLO M6 X 35 / SCREW M6 X 35	T0206035	1
15	ARANDELA D6,5 / WASHER D6,5	T4006020	1
16	GOMA / RUBBER	BE25636000	1
17	CASQUILLO / BUSH	BE25610007	1
18	TUERCA M5 / NUT M5	T810599990007	2
19	CASQUILLO / BUSH	T90052080004K	4
20	TORNILLO M5 X 15	T0205015	4
21	CASQUILLO / BUSH	BE250032060	1
22	VALVULA VACIADO / DRAINAGE VALVE	BT280228032	1
23	JUNTA / GASKET	BE90000403012	1

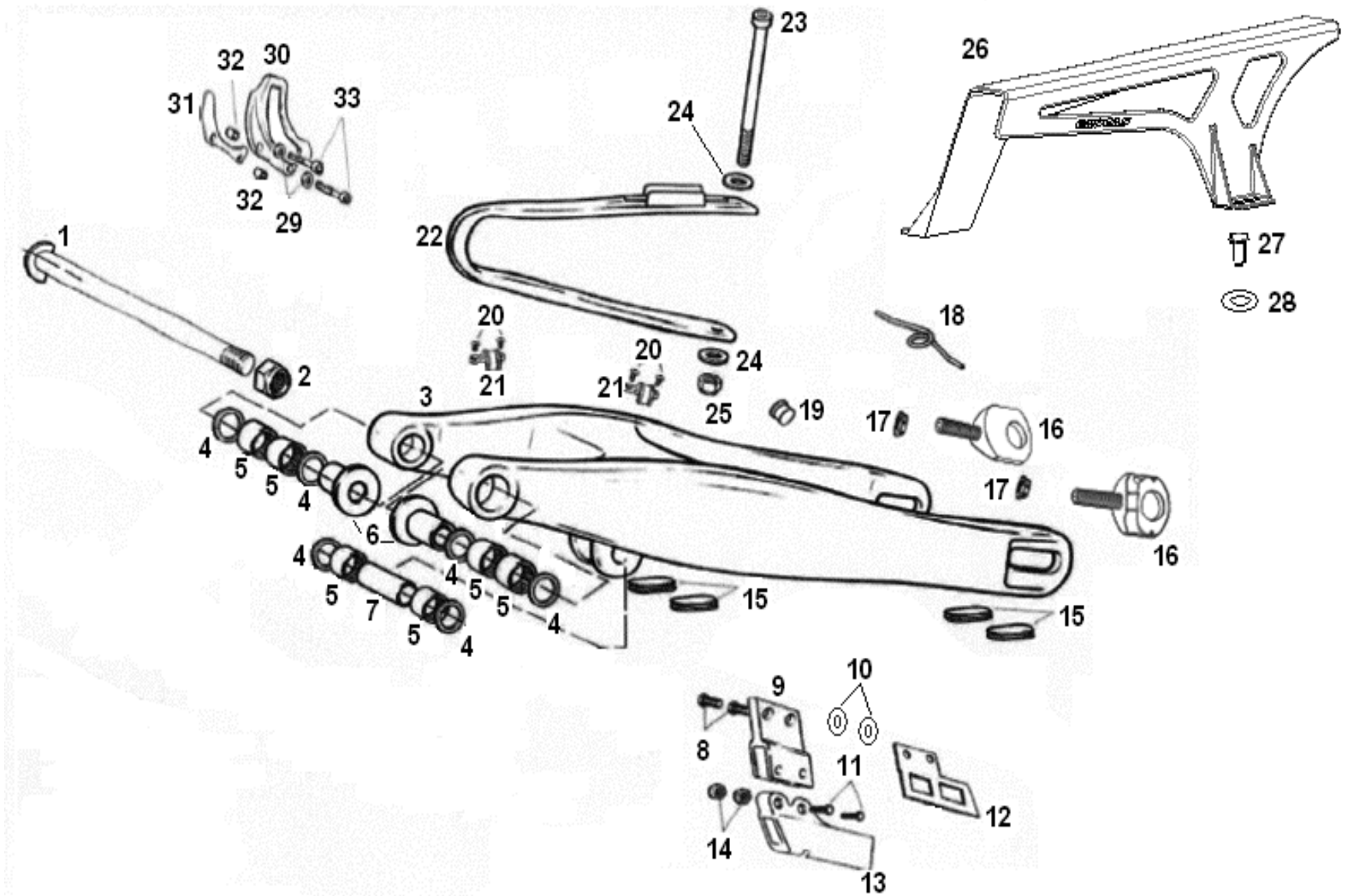
23
26
32
30
31
33
24
32
29
22
27
1
28
20
18
20
24
2
21
21
3
25
19
17
16
4
5
5
4
17
6
16
4
4
5
5
5
7
15
15
5
4
4
10
9
8
11
12
14
13

Nº	DESCRIPCION / DESCRIPTION	250/300	Cant
1	EJE BASCULANTE / SWINGARM AXLE	BE250312008	1
2	TUERCA / NUT	BE25612009	1
3	BASCULANTE / SWINGARM	BE250612002RC	1
4	TORICA 3.5X21 / O-RING 3.5X21	BE250510011	6
5	JAULA AGUJAS / NEEDLE BEARING	BE25614010	6
6	CASQUILLO BASCULANTE / SWINGARM BUSH	BE400012511	2
7	CASQUILLO 14X22X57 / BUSH 14X22X57	BE25612014	1
8	TORNILLO ALLEN 8X20 / ALLEN SCREW 8X20	T0308020	2
9	SOPORTE GUIA CADENA / CHAIN GUIDE SUPPORT	BC250221018	1
10	ARANDELA PLANA 6X12X1.5 / FLAT WASHER 6X12X1.5	T4006012	2
11	TORNILLO 6X45 / SCREW 6X45	T0206045	2
12	PLACA REF GUIA CADENA / REINFORCEMENT PLATE FOR CHAIN GUIDE	BC250412032	1
13	GUIA CADENA / CHAIN GUIDE	BE420002511	1
14	TUERCA AUTOBLOC. M-6 / SELF-LOCK NUT M-6	T2206002	2
15	GOMA PROTECTOR BASCULANTE / SWINGARM PROTECTION RUBBER	BE25836005	4
16	TENSOR RUEDA / WHEEL TENSOR	BE250418022	2
17	TUERCA / NUT	M01613001	2
18	MUELLE TENSOR RUEDA TRAS. / REAR WHEEL TENSOR SPRING	BE250718122	1
19	TAPON BASCULANTE / SWINGARM CAP	BE250436001	4
20	TORNILLO ULS 5X12 / ULS SCREW 5X12	T0505012	4
21	SUJ.LATIG.SOBRE BASC. / HOSE HOLDER	BE25612006	2
22	PATIN CADENA / CHAIN SLIDER	BE420502508	1
23	TORNILLO ALLEN 6 X 100 / ALLEN SCREW 6X100	T03060100	1
24	ARANDELA 6X18X1.5 / WHASER 6X18X1.5	T4006018	2
25	TUERCA AUTOBL. M-6 / SELF-LOCK NUT M-6	T2106002	1
26	PROTECTOR CADENA / CHAIN PROTECTION	BE250328011	1
27	TORNILLO ULS 6X16 / ULS SCREW 6X16	T0506016	1
28	DISTANCIADOR CUBRECADENA / CHAIN PROTECTOR SPACER	BE250720106	1
29	ARANDELA PLANA 6X12X1.5 / FLAT WASHER 6X12X1.5	T4006012	2
30	PROTECTOR PIÑON PLASTICO / SPROCKET PLASTIC PROTECTOR	BE486002508	1
31	PLATINA PROTECTOR PIÑON / SPROCKET PLATE PROTECTOR	ME25636021	1
32	CASQUILLO DISTANCIADOR PIÑON / SPROCKET SPACER BUSH	ME250036019	2
33	TORNILLO ALLEN 6x45 / ALLEN SCREW 6X45	T0306045	2

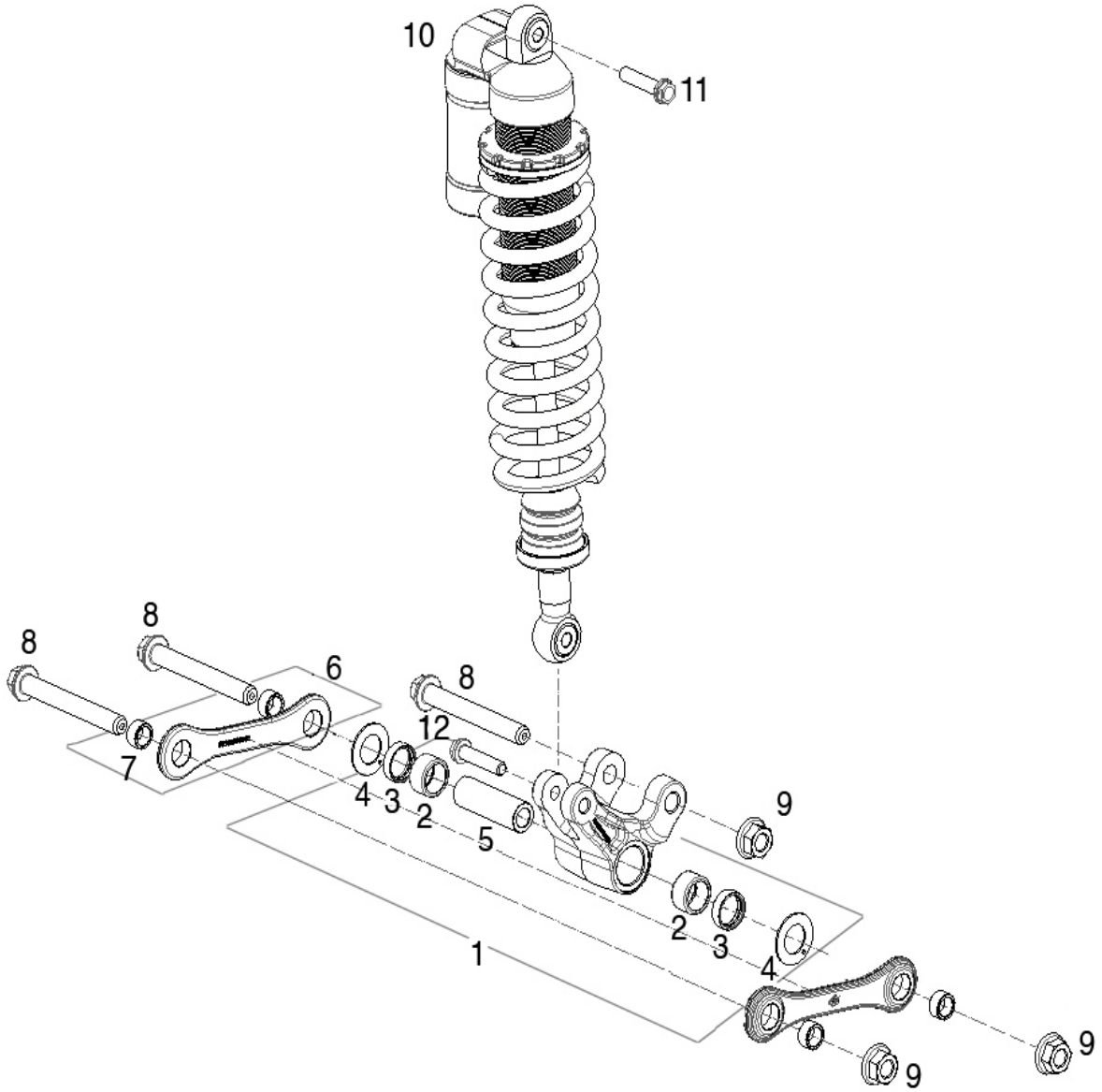
10
11
8
8
8
6
7
12
4
3
2
5
9
2
3
4
1
9
9

Nº	DESCRIPCION / DESCRIPTION	250/300	Cant
1	CTO.BALANCIN / ROCKER ARM ASSY	BE32000NCT3011	1
2	JAULA AGUJAS / NEEDLE BEARING	BE25614010	2
3	RETEN DIAM.28X22X8 / SEAL DIAM. 28X22X8	BE32025N3011	2
4	ARANDELA IGLIDUR G / IGLIDUR G WASHER	T4003822	2
5	EJE / SHAFT	BE32020N3011	1
6	CTO. BIELETA / CONNECTING ROD ASSY	BE34000NCT3011	2
7	CASQUILLO BIELETA / CONNECTING ROD BUSH	BE25642002	4
8	TORNILLO M14X110 / SCREW M14X110	T0214110R	3
9	TUERCA / NUT	BE25612009	3
10	AMORTIGUADOR SACHS / SHOCK ABSORBER SACHS	BE3000013012	1
11	TORNILLO M10X45 / SCREW M10X45	T0210045	1
12	TORNILLO M10X40 / SCREW M10X40	T0110042	1

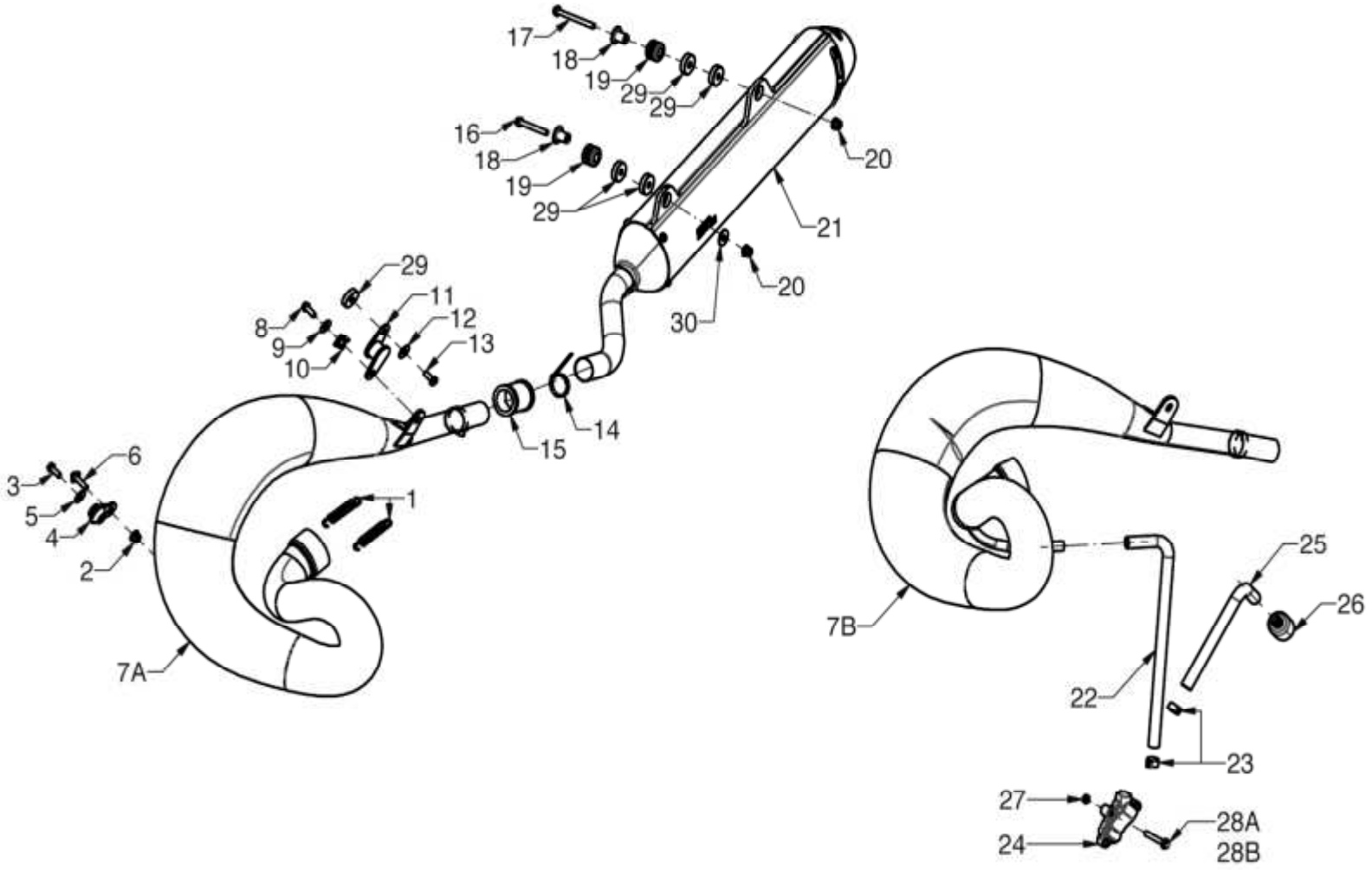
17
18
19
29
29
16
18
19
29
20
21
20
30
29
11
12
13
8
9
10
14
15
6
3
5
4
2
1
7A
7B
25
26
22
23
27
24
28A
28B

Nº	DESCRIPCION / DESCRIPTION	250/300	Cant
1	MUELLE / SPRING	BE25610042	2
2	TUERCA M6 / NUT M6	T2206002	1
3	TORNILLO M6 X 16 / SCREW M6 X 16	T0206016	1
4	SILENBLOC / SILENTBLOCK	BIC050526004	1
5	ARANDELA D6 / WASHER D6	T4006018	1
6	TORNILLO M6 X 20 / SCREW M6 X 20	T0606020	1
7A	TUBO DE ESCAPE / EXHAUST PIPE	BE85000013012	1
7B	TUBO DE ESCAPE HOMOLOGADO / EXHAUST PIPE (HOMOLG.)	BE85000033012	1
8	TORNILLO M6 X 16 / SCREW M6 X 16	T0206016	1
9	ARANDELA D6 / WASHER D6	T4006018	1
10	TUERCA M6 / NUT M6	T2606000	1
11	SILENBLOC / SILENTBLOCK	BE25626004	1
12	ARANDELA D6 / WASHER D6	T4006018	1
13	TORNILLO M6 X 20 / SCREW M6 X 20	T0206020	1
14	BRIDA 4,8 X 20 / STRAP 4,8 X 20	BE25634009	1
15	JUNTA ESCAPE / GASKET	BE25626003	1
16	TORNILLO M6 X 55 / SCREW M6 X 55	T0206055	1
17	TORNILLO M6 X 60 / SCREW M6 X 60	T0206060	1
18	CASQUILLO / BUSH	BE250026000	2
19	SILENBLOC / SILENTBLOCK	BE250026005	2
20	TUERCA M6 / NUT M6	T2206002	2
21	SILENCIADOR FMF / SILENCER FMF	BE85000023012	1
22	TUBO AIRE SECUNDARIO LARGO / LONG SECONDARY AIR HOSE (HOMOLOG.)	BE785551209	1
23	ABRAZADERA 15 / CLAMP 15 (HOMOLOG.)	L200053	2
24	VALVULA AIRE SECUNDARIO / SECONDARY AIR VALVE (HOMOLOG.)	BE785652509	1
25	TUBO AIRE SECUNDARIO CORTO / SHORT SECONDARY AIR HOSE (HOMOLOG.)	BE785502509	1
26	FILTRO AIRE SECUNDARIO / SECONDARY AIR FILTER (HOMOLOG.)	BT280626059	1
27	CASQUILLO / BUSH (HOMOLOG.)	BC250014050	1
28A	TORNILLO M6 X 30 / SCREW M6 X 30	T0206030	1
28B	TORNILLO M6 X 45 / SCREW M6 X 45 (HOMOLOG.)	T0206045	1
29	CASQUILLO / BUSH	T90062250007K	4
30	ARANDELA D6 / WASHER D6	T4006020	1

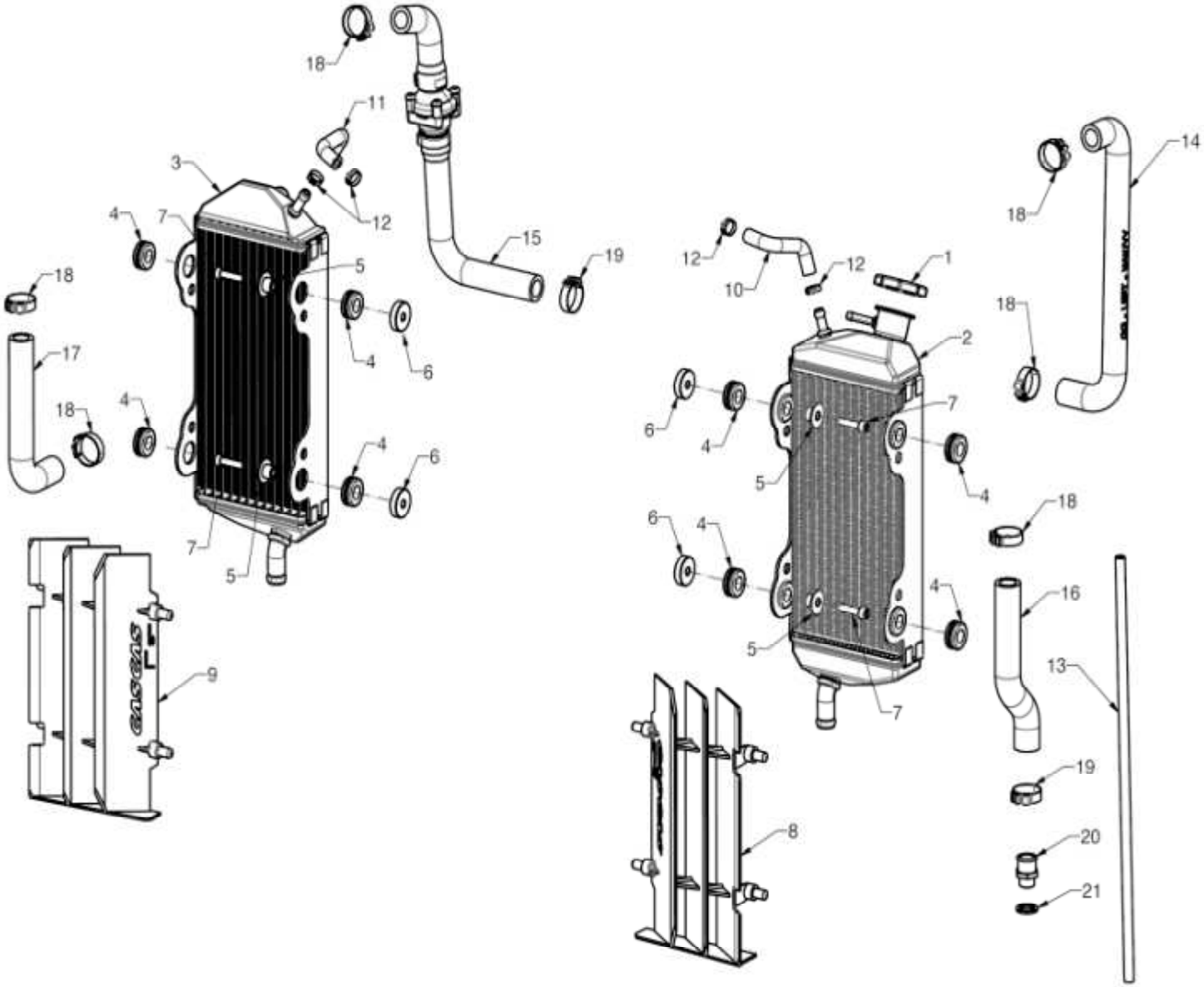
18
11
3
4
7
12
15
19
5
6
17
9
14
10
1
2
16
13
20
21
8

Nº	DESCRIPCION / DESCRIPTION	250/300	Cant
1	TAPON RADIADOR 1,8 BAR / RADIATOR CAP 1,8 BAR	BFS701504509	1
2	RADIADOR IZQUIERDO CON TAPON 1,8 BAR / LEFT RADIATOR WITH CAP 1,8 BAR	BE700502511	1
3	RADIADOR DERECHO / RIGHT RADIATOR	BE250732000	1
4	SILENBLOC / SILENTBLOCK	BIE500132031	8
5	CASQUILLO / BUSH	BE25832040	4
6	CASQUILLO / BUSH	T90062250007K	4
7	TORNILLO M6 X 25 / SCREW M6/25	T0306025	4
8	REJILLA RADIADOR IZQUIERDO BLANCA / LEFT RADIATOR PROTECTION WHITE	BE250720001	1
9	REJILLA RADIADOR DERECHO BLANCA / RIGHT RADIATOR PROTECTION WHITE	BE250720002	1
10	TUBO SUPERIOR RADIADOR IZQUIERDO / LEFT RADIATOR UPPER HOSE	BE70000023012	1
11	TUBO SUPERIOR RADIADOR DERECHO / RIGHT RADIATOR UPPER HOSE	BE70000013012	1
12	ABRAZADERA 12 / CLAMP 12	MFS400110031	4
13	TUBO SOBRANTE / VENT HOSE	BE25632009	1
14	TUBO TRASERO RADIADOR IZQUIERDO / LEFT RADIATOR REAR HOSE	BE250732002	1
15	TUBO TRAS. CON TERMOSTATO RAD. DER. / RIGHT RAD. REAR HOSE W. THERMOSTAT	BE710102511	1
16	TUBO INFERIOR RADIADOR IZQUIERDO / LEFT RADIATOR LOWER HOSE	BE250432007	1
17	TUBO INFERIOR RADIADOR DERECHO / RIGHT RADIATOR LOWER HOSE	BE25632006	1
18	ABRAZADERA 22 / CLAMP 22	L200038	6
19	ABRAZADERA 23 / CLAMP 23	L200041	2
20	RACOR ENTRADA AGUA / WATER INLET FITTING	ME25610013	1
21	ARANDELA DE FIBRA D14 / FIBER WASHER D14	ME25610014	1

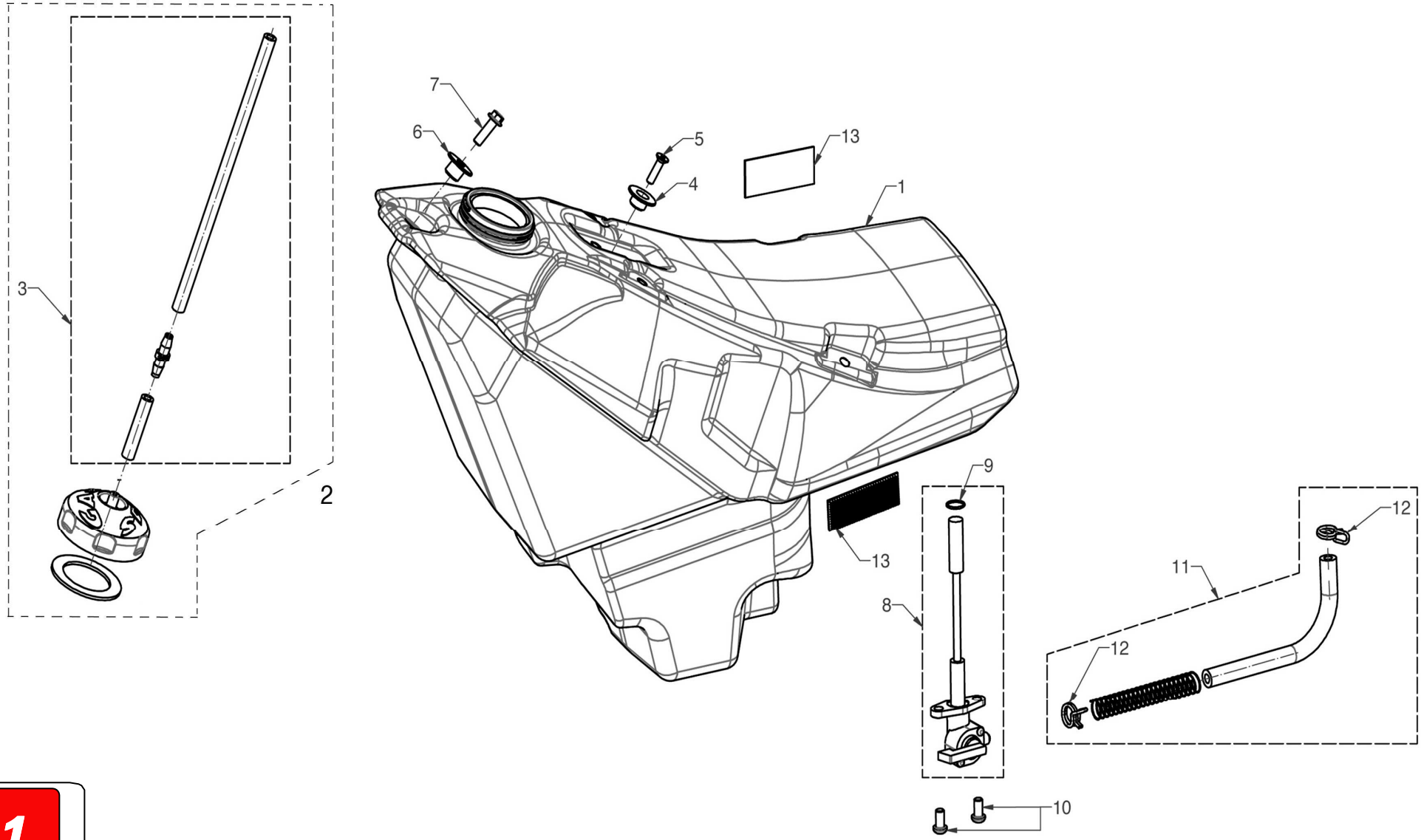
7
6
5
4
13
1
3
2
9
13
8
12
11
12
10

Nº	DESCRIPCION / DESCRIPTION	250/300	Cant
1	DEPOSITO GASOLINA 2012 / FUEL TANK 2012	BE75000013012	1
2	TAPON / CAP	BE250520010CT	1
3	CTO. TUBO DESVAPORIZADOR / VENT HOSE ASSY	BT280310018	1
4	CASQUILLO / BUSH	BIE050210007	1
5	TORNILLO M5 X 20 / SCREW M5 X 20	T0405020	1
6	CASQUILLO / BUSH	BE25832040	1
7	TORNILLO M6 X 20 / SCREW M6 X 20	T0206020	1
8	GRIFO GASOLINA / FUEL TAP	BE760202510	1
9	TORICA 10 X 2,5 / O-RING 10 X 2,5	B740120	1
10	TORNILLO M6 X 12 / SCREW M6 X 12	T0506012	2
11	TUBO GASOLINA / FUEL HOSE	BEH200610133	1
12	ABRAZADERA / CLAMP	BE25610044	2
13	CINTA DE CIERRE ADHESIVA / ADHESIVE LOCKING TAPE	BE90000413012	2

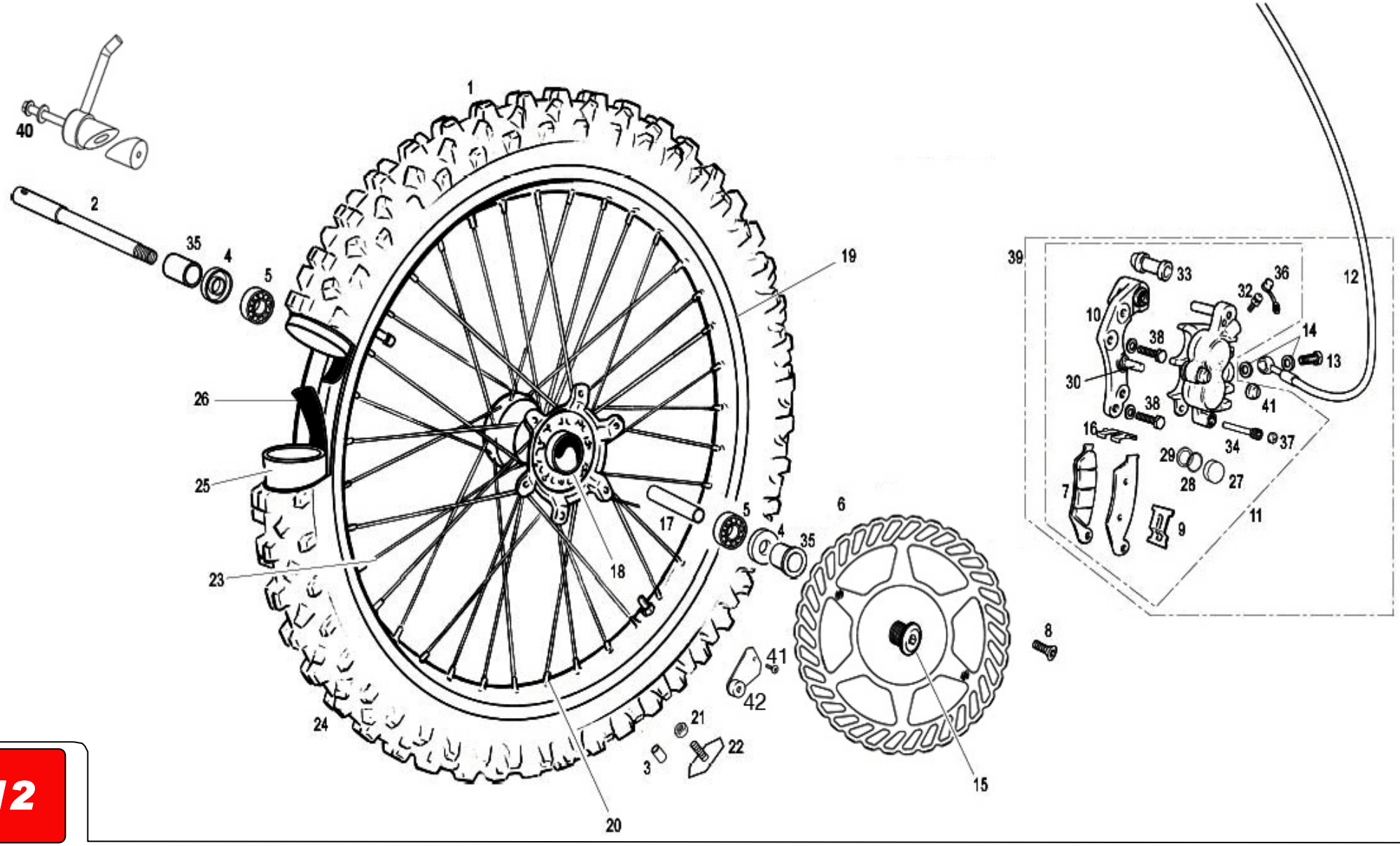
40
2
35
4
5
1
19
26
25
23
17
18
5
4
35
6
24
20
41
42
21
22
3
15
8
39
33
36
32
12
10
38
14
13
30
38
41
16
34
37
29
28
27
7
9
11

Nº	DESCRIPCION / DESCRIPTION	250/300	Cant
1	RUEDA DELANTERA (LLANTA+RADIOS+CUBO) / FRONT WHEEL (RIM+SPOKES+HUB)	BE500000CT2511	1
2	EJE RUEDA DELANTERA / FRONT WHEEL AXIS	BC250718017	1
3	CASQUILLO AGARRE CUBIERTA DELANTERA / FRONT TIRE HOLDING BUSHING	BE555102510	1
4	RETÉN CUBO DELANTERO 30X42X7 / 30X42X7 FRONT WHEEL GASKET	BE250418057	2
5	COJINETE 6905 2RSR / BEARING	ME120136055	2
6	DISCO FRENO DELANTERO / FRONT BRAKE DISC	BE520002509	1
7	PASTILLAS DE FRENO DELANTERO / FRONT BRAKE PADS KIT	BE620652508	1
8	TORNILLO M6 X 14 / SCREW M6 X 14	T0566014	6
9	PLATINA (A) SUJ. PASTILLAS DEL. / FRONT BRAKE PADS HOLDER BRACKET (A)	BE620112508	1
10	SOPORTE PINZA DELANTERO / FRONT CALIPER SUPPORT	BE620102508	1
11	PINZA FRENO DELANT. / FRONT BRAKE CALIPER	BE250722000	1
12	LATIGUILLO FRENO DELANTERO / FRONT BRAKE HOSE	BE250422002	1
13	RACORD SUJ. LATIGUILLO 10X1,25 / HOSE HOLDER RACORD 10X1.25	BC25722006	1
14	ARANDELA LATIGUILLO 10X14X1 / HOSE WASHER 10X14X1	BE25622007	2
15	TORNILLO EJE RUEDA DELANTERA / FRONT WHEEL AXIS BOLT	BE250718026	1
16	PLATINA (B) SUJ. PASTILLAS DELANT. / FRONT BRAKE PADS HOLDER BRACKET (B)	BE620122508	1
17	DISTANCIADOR / SPACER	BE250418058	1
18	CUBO RUEDA DELANTERO SEP. INT. ALUM. / FRONT WHEEL HUB	BE250418007	1
19	LLANTA 1,60X21 / RIM 1.60X21	BE54001R2509	1
20	TUERCA RADIO DELANTERO / FRONT SPOKE NUT	BE250218010	36
21	TUERCA AUTOBLOCANTE M8 BAJA / M8 NUT SELF-LOCKING LOWER	T2108001	1
22	AGARRE CUBIERTA DELANTERA / FRONT TIRE HOLDER	BE505002509	1
23	RADIO DELANTERO 243X3,5 / FRONT SPOKE 243X3.5	BE542012508	36
24	NEUMÁTICO DELANTERO 90/90-21 / FRONT TIRE 90/90-21	BE501002511	1
25	CÁMARA DELANTERA / FRONT AIR HOSE	BE502002511	1
26	PROTECTOR BANDA DELANTERA / FRONT RIM BAND	BE503002511	1
27	KIT REPARACIÓN PISTONES / PISTON REPARATION SET	BE620422508	4
32	KIT SANGRADOR / BLEEDER SET	BE620602508	1
33	PROTEC. TORNILLO PINZA FRENO DEL. / FRONT BRAKE CALIPER BOLT PROT.	BE620682508	1
35	CASQUILLO RUEDA DELANTERA / FRONT WHEEL BUSHING	BC250418019	2
39	CTO. FRENO DELANTERO PURGADO / FRONT BRAKE SET	BE250422108	1
40	TIRADOR EJE DELANTERO / FRONT AXLE PULLER	BE536002511	1
41	TORNILLO M4 x 10 / SCREW M4 x 10	T0554010N	1
42	IMAN / MAGNET	BP120734008CT	1

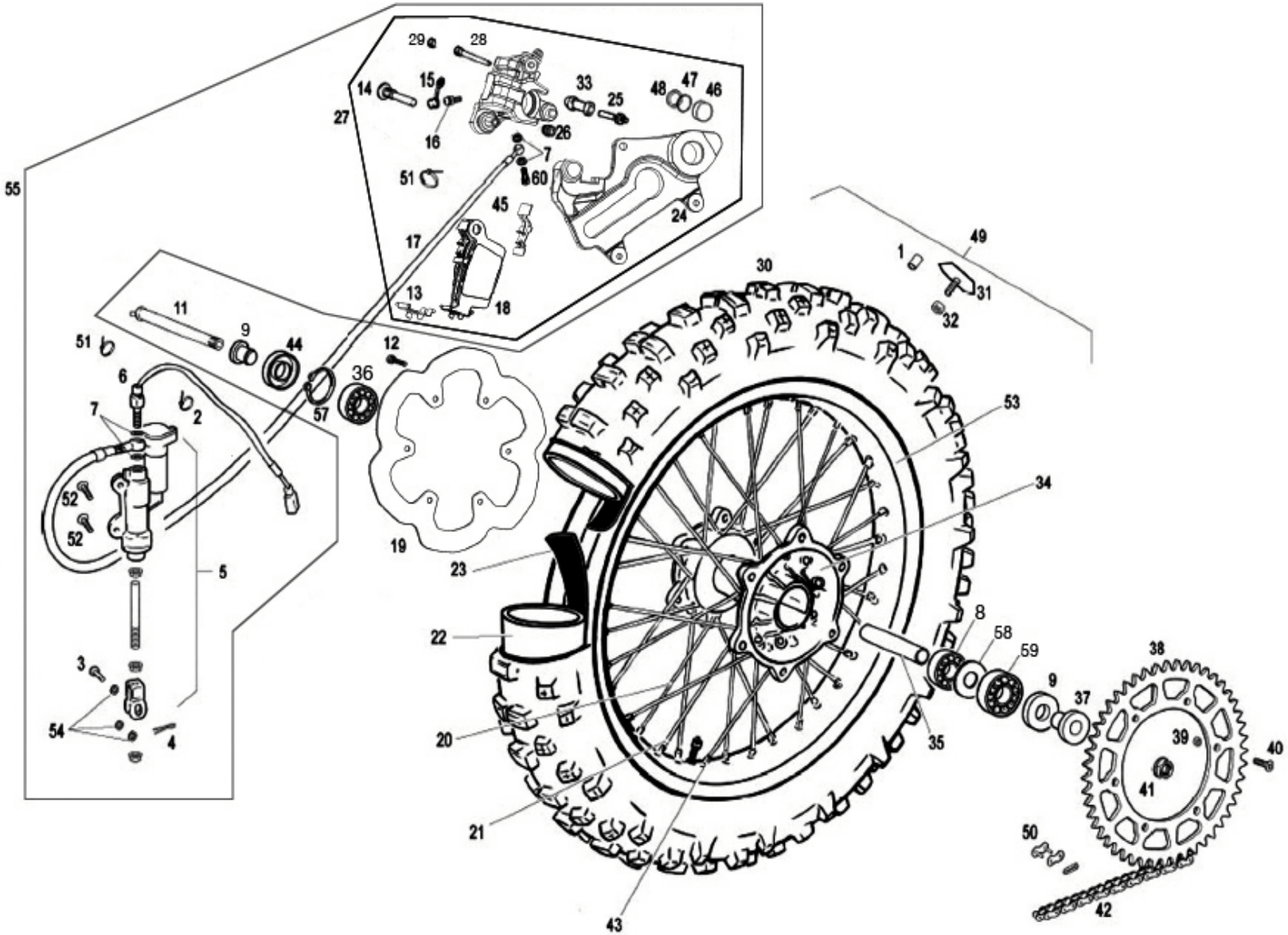
29
28
14
15
33
25
48
47
46
27
16
26
7
51
60
45
24
55
17
13
18
49
1
31
32
30
11
9
44
12
51
36
6
57
7
2
53
34
52
52
19
23
5
22
8
58
59
38
9
37
3
20
35
39
40
54
4
41
21
50
43
42

Nº	DESCRIPCION / DESCRIPTION	250/300	Cant
1	CASQUILLO AGARRE CUBIERTA DELANTERA / FRONT TIRE HOLDING BUSHING	BE555102510	1
2	BRIDA UNEX 2244 16/102 4.8X36 / CLAMP 2244 16/102 4.8X36	BE25634007	1
3	PASADOR 8X20 PEDAL FRENO / BRAKE PEDAL PIN 8X20	BE25622026	1
4	CLAVILLA PASADOR FRENO 2X20 / BRAKE PEDAL PIN STOPPER	BE25622027	1
5	BOMBA FRENO TRASERO NISSIN / NISSIN REAR BRAKE PUMP	BE660002509	1
6	INTERRUPTOR STOP BOMBA NISSIN / NISSIN BRAKE PUMP STOP SWITCH	BE250334003	1
7	ARANDELA LATIGUILLO 10X14X1 / HOSE WASHER 10X14X1	BE25622007	4
8	COJINETE 9204 2RSR / BEARING 6204 2RSR	C180700	1
9	RETÉN RUEDA TRASERA / REAR WHEEL SEAL	BE250318055	1
10	DISTANCIADOR RUEDA TRASERA CORTO / SHORT REAR WHEEL SPACER	BE250018025	1
11	EJE RUEDA TRASERA / REAR WHEEL AXIS	BE25618020	1
12	TORNILLO HEXAGONAL 6X16 DISCO TRAS. / R. DISC BRAKE HEX. SCREW 6X16	T0206014	6
13	PLATINA (A) SUJ. PASTILLAS TRAS. / REAR BRAKE PADS HOLDER BRACKET (A)	BE620112508	1
14	TORNILLO SUJECIÓN PINZA / CALIPER HOLDER SCREW	BE250022096	1
15	TAPÓN SANGRADOR / BLEEDER CAP	BE250022055	1
16	SANGRADOR / BLEEDER	BE250022060	1
17	LATIGUILLO FRENO TRASERO NISSIN / NISSIN REAR BRAKE HOSE	BE661002509	1
18	PASTILLAS DE FRENO TRASERO NISSIN / NISSIN REAR BRAKE PADS KIT	BE675002509	1
19	DISCO FRENO TRASERO / REAR BRAKE DISC	BE570002509	1
20	RADIO 192X4,5 LADO FRENO 18” / 18” BRAKE-SIDE SPOKE 192X4.5	BE250018015	18
21	RADIO 188X4,5 LADO CORONA 18” / 18” SPROCKET-SIDE SPOKE 188X4.5	BE250018014	18
22	CAMARA TRASERA 18 CR / REAR AIR HOSE 18 CR	BE552002511	1
23	PROTECTOR BANDA TRASERA 18 / REAR RIM BAND	BE553002511	1
24	SOPORTE PINZA TRASERA / REAR CALIPER SUPPORT	BE671002509	1
25	TORNILLO CLAVIJA PINZA FRENO / BRAKE CALIPER BOLT	BE250022034	1
26	GUARDAPOLVO / DUST COVER	BE675802509	1
27	PINZA FRENO TRASERO / REAR BRAKE CALIPER CTO.	BE67000CT2509	1
28	PASADOR PASTILLAS / BRAKE PADS PIN	BE250022094	1
29	PROTECCCION PASADOR / PIN PROTECTION	BE250022095	1
30	NEUMÁTICO TRASERO 140/80-18 / REAR TYRE 140/80-18	BE551002511	1
31	AGARRE CUBIERTA TRASERA / REAR TYRE HOLDER	BE555002509	1
32	TUERCA AUTOBLOCANTE M8 BAJA / SELF-LOCKING NUT M8	T2108001	1
33	PROTECTOR TORNILLO / SCREW PROTECTOR	BE250022039	1
34	CUBO RUEDA TRASERA / REAR WHEEL HUB	BE250318027	1

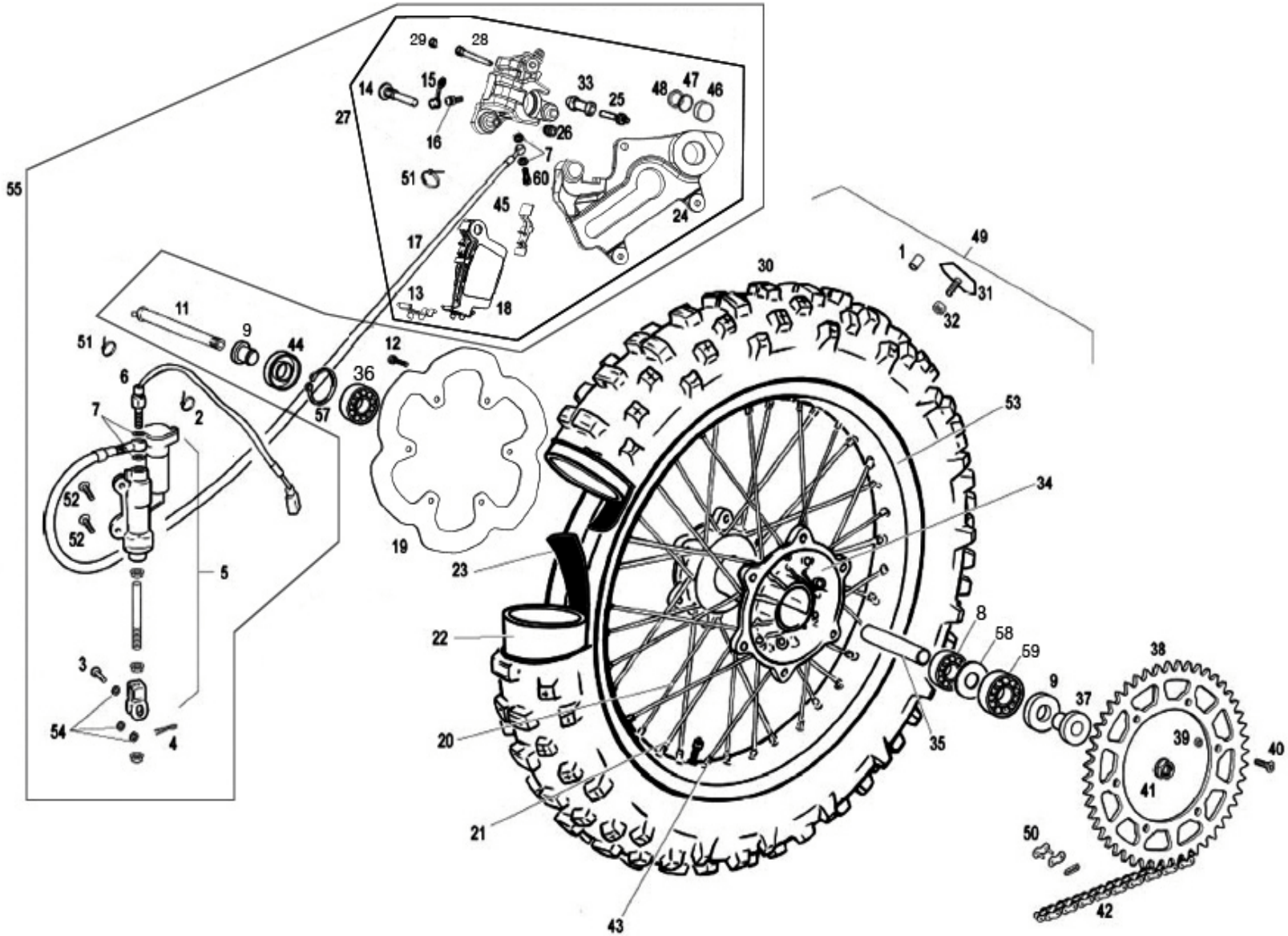
29
28
14
15
33
25
48
47
46
27
16
26
7
51
60
45
24
17
13
18
55
49
1
31
32
30
11
9
44
12
36
51
6
7
57
53
52
52
34
19
23
5
22
8
58
59
38
3
9
37
54
4
20
35
39
40
41
21
50
42
43

Nº	DESCRIPCION / DESCRIPTION	250/300	Cant
35	DISTANCIADOR RUEDA TRASERA INTE. / REAR WHEEL SPACER	R575700	1
36	COJINETE 6004 2RSR / BEARING 6004 2RSR	C160001	1
37	DISTANCIADOR RUEDA DELANTERA LARGO / LONG WHEEL SPACER	BE250318021	1
38	CORONA Z48 SERIE / Z48 SERIAL SPROCKET	BE573002511	1
39	TUERCA AUTOBLOCANTE M8 ALTA / HIGH SELF-LOCKING SPROCKET NUT M8	T2208002	6
40	ALLEN CÓNICO 8X30 / CONIC ALLEN BOLT 8X30	T0408030	6
41	TUERCA AUTOBLOCANTE RUEDA TRASERA / REAR WHEEL SELF-LOCKING NUT	BE25618023	1
42	CADENA REGINA / REGINA CHAIN	BE250310036	1
43	TUERCA RADIO TRASERO / REAR SPOKE NUT	BE250018016	36
45	PLATINA (B) SUJ. PAST. TRASERAS / REAR BRAKE PADS HOLDER BRACKET (B)	BE620122508	2
46	PISTÓN PINZA FRENO TRASERO / REAR BRAKE CALIPER PISTON	BE675602509	2
47	RETÉN PISTÓN PINZA FRENO TRASERO / REAR BRAKE CALIPER PISTON O'RING	BE675502509	2
48	TÓRICA PISTÓN PINZA FRENO TRASERO / REAR BRAKE CALIPER PISTON SEAL	BE250022048	2
49	RUEDA TRASERA / REAR WHEEL SET	BE55000CT2511	1
50	ENGANCHE CADENA / CHAIN SPLIT LINK	BE250310066	1
51	BRIDA UNEX CORTA / SHORT CLAMP	BE25634010	3
52	ULS 6X20 CON ARANDELA PLATA / 6X20 ULS WITH WASHER	T0506015	2
53	LLANTA 2.15X18 / RIM 2.15X18	BE59001R2509	1
54	ARANDELA 8X16X1 / 8X16X1 WASHER	T4008018	3
55	CTO. FRENO TRASERO / REAR BRAKE SET	BE67000CT2509	1
56	CASQUILLO SEPARADOR BOMBA FRENO TRASERO / SPACER BRAKE BUSHING	BT120222097	1
57	SEEGER DIÁMETRO 42 / 42 DIAMETER SEEGER	BE25618038	1
58	ARANDELA INTERIOR CUBO / INTERIOR HUB WASHER	BE250318056	1
59	COJINETE RUEDA 6005-25R1 C3 / WHEEL BEARING	BE250318054	1
60	RACORD SUJ. LATIGUILLO 10X1,25 / HOSE HOLDER RACORD 10X1.25	BC25722006	1

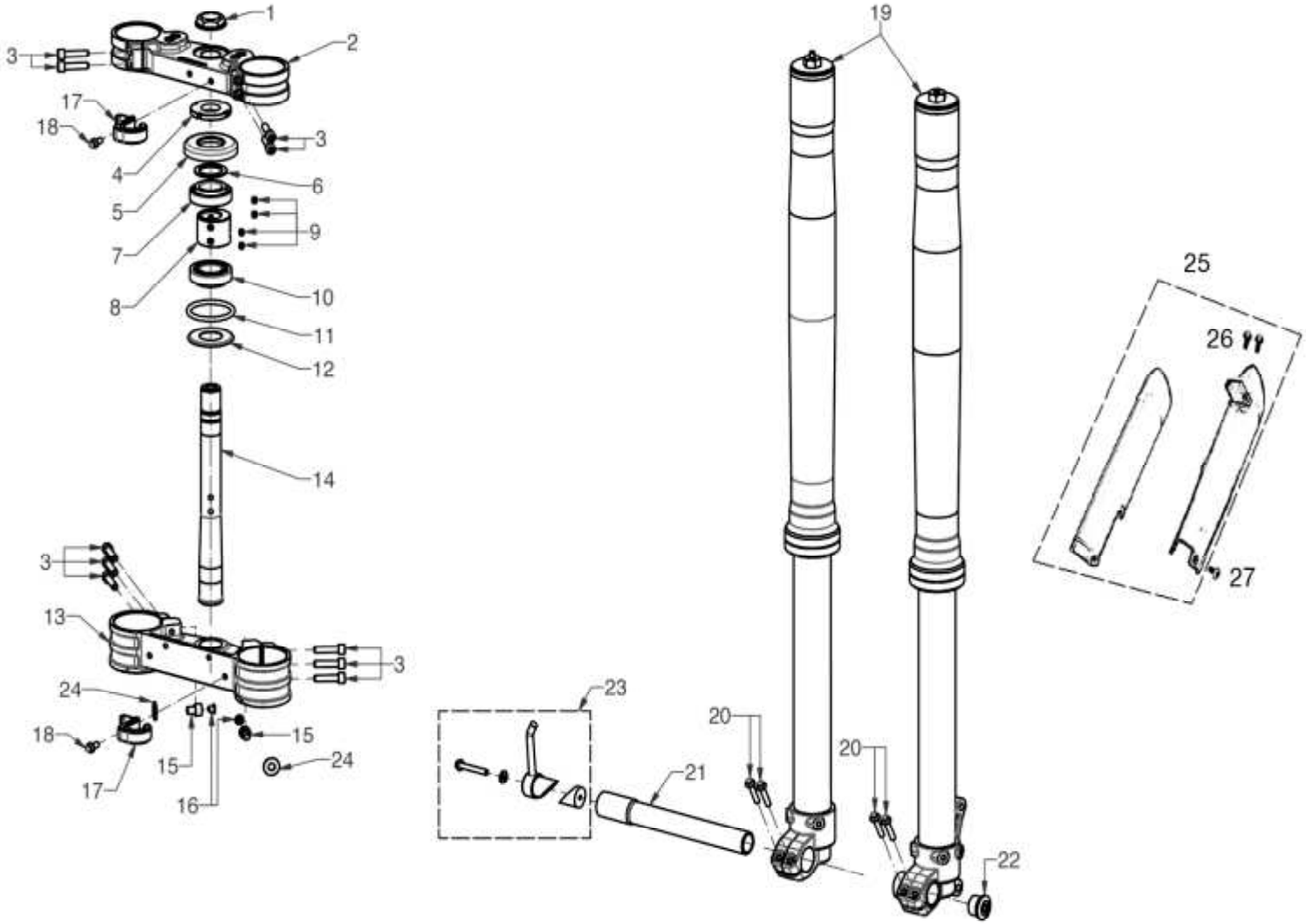
1
2
3
17
18
3
4
6
5
9
7
8
10
11
12
14
3
13
3
24
18
15
15
24
17
16
19
25
26
27
23
20
20
21
22

Nº	DESCRIPCION / DESCRIPTION	250/300	Cant
1	TUERCA DIRECCION SUPERIOR / TOP STEERING NUT	BE25610030	1
2	BRIDA SUPERIOR SUSPENSION / TOP FORK CLAMP	BE220002510	1
3	TORNILLO M7 X 30 / SCREW M7 X 30	T0307030	10
4	TUERCA DIRECCION INFERIOR / BOTTOM STEERING NUT	BE25610029	1
5	GUARDAPOLVO / STEERING HEAD COVER	BE25610126	1
6	ARANDELA DIRECCION INFERIOR / BOTTOM STEERING WASHER	BE25610028	1
7	COJINETE DIRECCION SUPERIOR / TOP STEERING BEARING	BE25610008	1
8	CASQUILLO CLAUSOR / LOCKING BUSH	BE20000033012	1
9	TORNILLO PRISIONERO M6 X 8 / SCREW M6 X 8	BE250310073	4
10	COJINETE DIRECCION INFERIOR / BOTTOM STEERING BEARING	BE250610008	1
11	TORICA 50 X 5 / O-RING 50 X 5	BE25610012	1
12	CAZOLETA DIRECCION / O-RING SUPPORT	BE250610026	1
13	BRIDA INFERIOR SUSPENSION / BOTTOM FORK CLAMP	BE210002510	1
14	EJE DIRECCION / STEERING SHAFT	BE250614003	1
15	TORNILLO M8 X 10 / SCREW M8 X 10	T0308010	2
16	TAPON PROTECTOR / PLASTIC CAP	BE250420068	2
17	GUIA LATIGUILLO / HOSE GUIDE	BE215202511	2
18	TORNILLO M6 X 14 / SCREW M6 X 14	T0206014	2
19	SUSPENSION DELANTERA SACHS / SACHS FRONT SUSPENSION	BE20000013012	1
20	TORNILLO M6 X 30 / SCREW M6 X 30	T0206030	4
21	EJE RUEDA DELANTERA / FRONT WHEEL SPINDLE	BC250718017	1
22	TORNILLO EJE RUEDA DELANTERA / SPINDLE SCREW	BE250718026	1
23	CJTO. TIRADOR EJE DELANTERO / PULLER ASSY.	BE536002511	1
24	ARANDELA D8 / WASHER D8	T4008018	2
25	PROTECTOR DE HORQUILLA BLANCO / FORK PROTECTOR WHITE	BE94600C2511	1
26	TORNILLO M5 X 20 / SCREW M5 X 20	T0805020	2
27	TORNILLO M6 X 13 / SCREW M6 X 13	T0316013	6

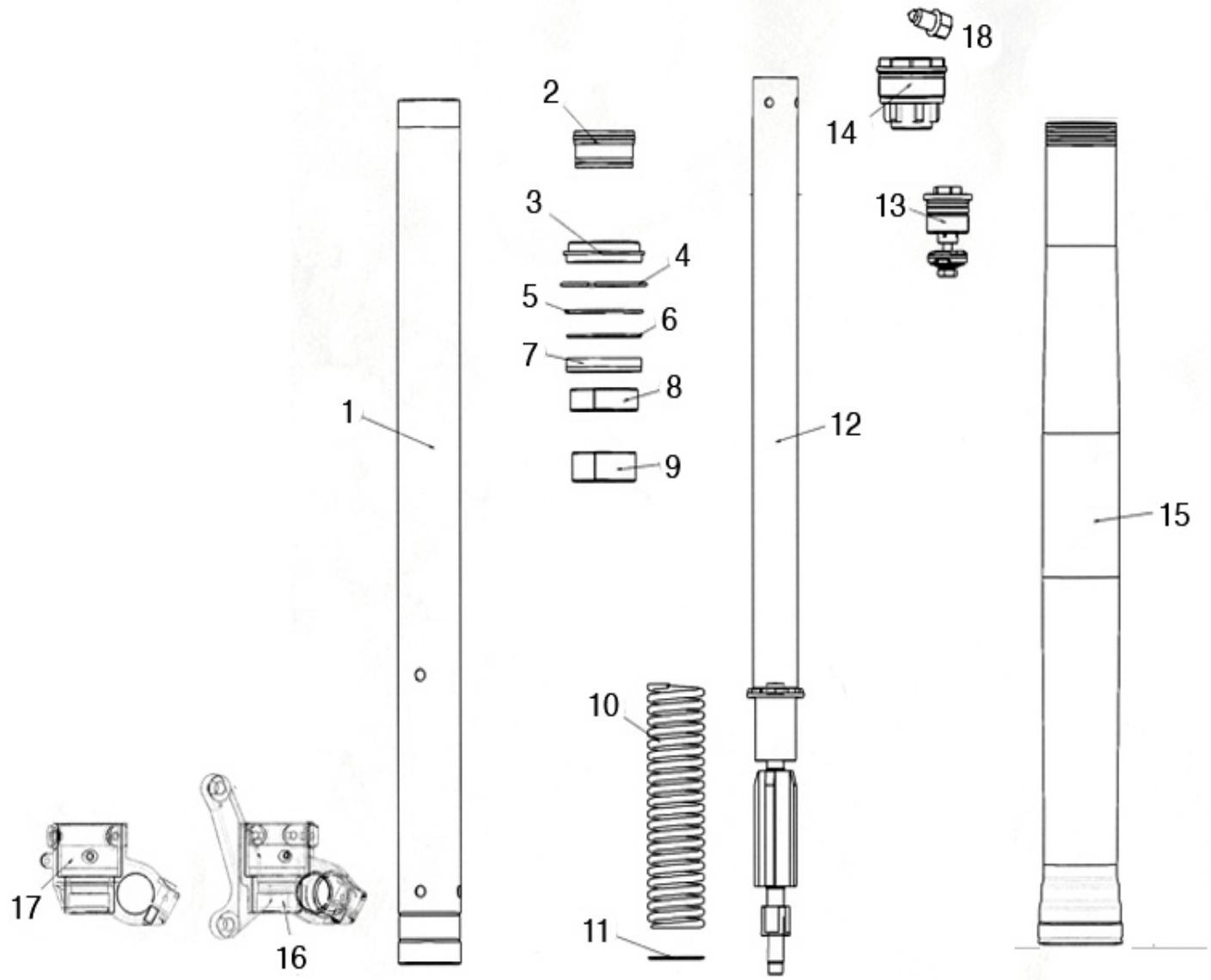
18
2
14
3
13
4
5
6
7
8
1
12
9
15
10
17
16
11

Nº	DESCRIPCION / DESCRIPTION	250/300	Cant
1	BARRA SUSPENSION / FRONT FORK INNER TUBE	000PAC50451	2
2	CASQUILLO INTERMEDIO CON TORICA / BUSH WITH O-RING	BE200552509	2
3	GUARDAPOLVO / DUST SEAL	BE200502509	2
4	ARANDELA SEEGER 64,5 / SEEGER WASHER 64,5	BE200352509	2
5	ARANDELA SEEGER 58,45 / SEEGER WASHER 58,45	BE200402509	2
6	DISTANCIADOR / SPACER	BE200202509	2
7	RETEN ACEITE / OIL SEAL	BE203702509	2
8	CASQUILLO FRICCION 52-48-L15 / BUSH 52-48-L15	BE200252509	2
9	CASQUILLO FRICCION 49-47-L20 / BUSH 49-47-L20	BE200302509	2
10	MUELLE K=0,42 L460 / SPRING K=0,42 L460	BE20170RC2509	2
11	ARANDELA / WASHER	BE200652509	2
12	CONJUNTO EXTENSION / REBOUND ASSY	STD524893655	2
13	CONJUNTO COMPRESION / COMPRESSION ASSY	STC524893655	2
14	CONJUNTO TAPON CON REGULACION EXTENSION / CAP ASSY WITH REBOUND ADJUSTER	BE201302509	2
15	BOTELLA / OUTER TUBE	BE201002509	2
16	PUNTERA IZQUIERDA CON SOPORTE FRENO / LEFT DROP-OFF WITH BRAKE SUPPORT	000PAA50415	1
17	PUNTERA DERECHA / RIGHT DROP-OFF	000PAA50416	1
18	TORNILLO REGULACION CON TORICA / ADJUSTING SCREW WITH O-RING	BE201402509	2

ENERO/JANUARY/JANVIER/GENNAIO /JANUAR 2012